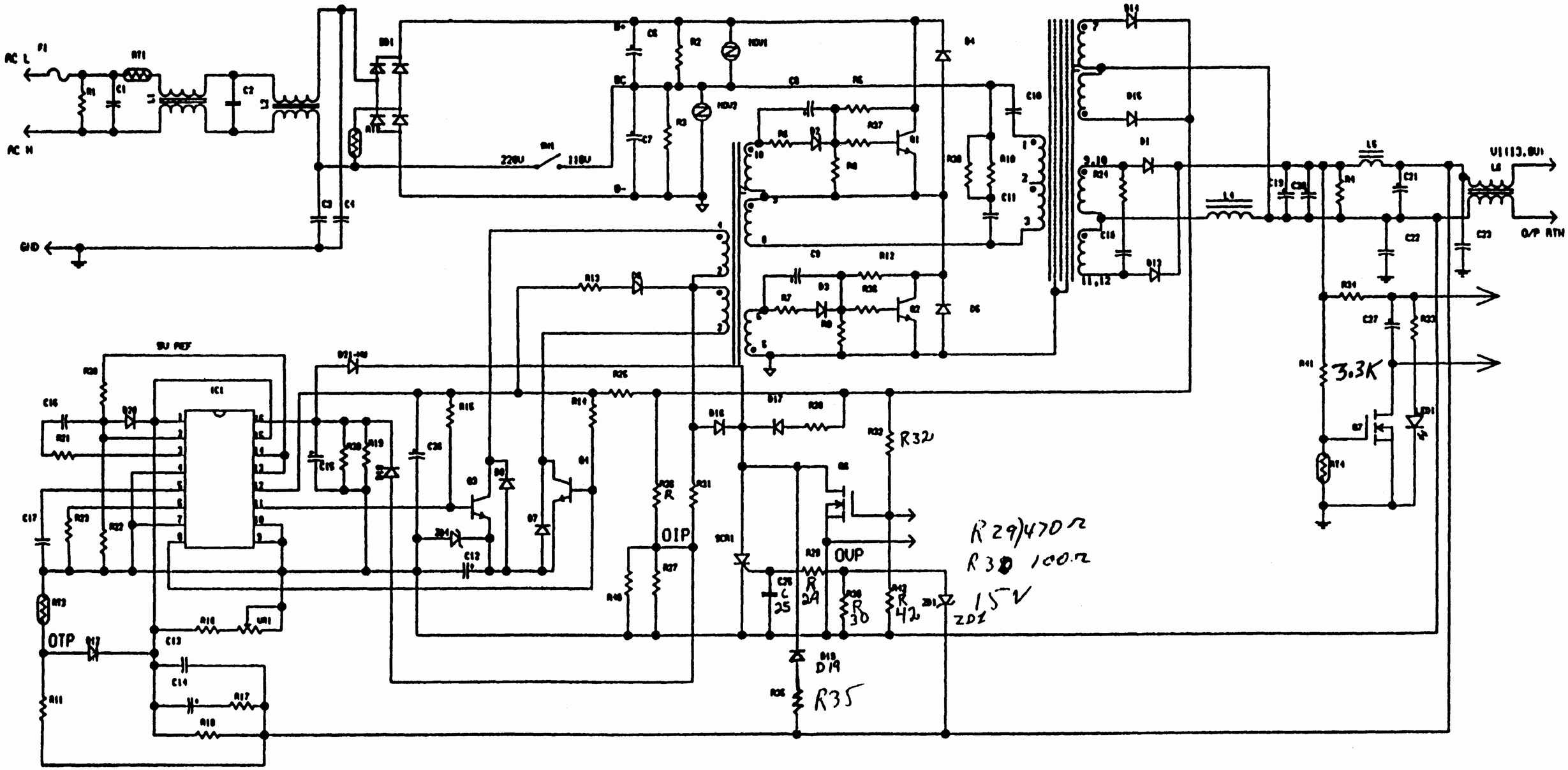

ASTRON CORPORATION	
IRVINE, CALIFORNIA	
DATE: 8/22/96	APPROVED:
SS-12	