CONNECT SYSTEMS INCORPORATED
1802 Eastman Ave., Suite 116
Ventura, Ca. 93003

Phone (805) 642-7184
Fax (805) 642-7271

"MicroPatch"

Model 9800
&
Model 9800-EXP

MULTI MODE INTERCONNECT

USER'S INSTRUCTION MANUAL
(Version 3.0)

TABLE OF CONTENTS

Description 3

Installation and Adjustments 4

Programming Procedure 10

Operating Mode Programming 11

CW ID Programming 22

Speed Dialer Programming 23

Toll Override Programming 25

Remote programming 27

OPERATION 31

Glossary 46

Warranty 47

Schematic Diagrams ..... 48 - 50

FCC Notice to Users 51

OPTIONS:

Export Version (Option 9800-EXP) 3, 21, 31, 37

***** 2 Tone Selective Calling (Option 9802) 38

***** CTCSS Selective Calling (Option 9803) 39

***** 5/6 Tone Selective Calling (Option 9804) .. 40

Auxiliary Relay (Option 9805) 41

Electronic Voice Delay (Option 9801) 42

EVD Schematic 43

CTCSS Board (Option TSU-32P) 44

AUSTEL (Australia Version) 45

***** Tone options are user selectable beginning with version 3.0. Having purchased any tone option, the user can now select a different tone option at will using programming line 4.3. in Programming Area No. 1 (See page 19).

GENERAL DESCRIPTION

The Model 9800 'MicroPatch' by Connect Systems Inc. is a fully automatic Multi-Mode radiotelephone interconnect terminal. A built-in keyboard and digital display allows the user to obtain the maximum power from the on-board microprocessor. All features are user programmable and/or selectable. Additionally, there are eight modes of operation to choose from...

1. **Simplex Sampling Interconnect**
   Sampling Simplex with VOX enhancement.
2. **VOX Control Station Interconnect**
   For operation through repeaters, or straight simplex.
3. **Duplex Base Station Interconnect**
   Adds semi-duplex interconnect to any duplex base station.
4. **Duplex Repeater Interconnect**
   Adds semi-duplex interconnect to any existing repeater system.
5. **Repeater Controller with Duplex Interconnect**
   Converts any receiver and transmitter into a full featured repeater.
6. **Dial Access Remote Base**
   Dispatch and have full use of your radio system from any telephone. Operates with any mode selected above.
7. **Dial Access Paging Terminal**
   Beep Pagers and/or selectively call mobiles with or without two way voice from any telephone.
8. **Talk-Back Paging Terminal**
   Beep pagers or mobiles followed with a one way voice message from any telephone.

And, powerful built-in standard features such as... 90 number speed dialer, last number redial, remote hook-flash, remotely controllable relay, automatic disconnect on busy signals and dialtone, fully regenerated tone or pulse dialing, etc. make the 9800 the most versatile and powerful interconnect product on the market today!

********** 9800-EXP ONLY ---------->

Segments of this manual which are only applicable to the EXP version are clearly marked similar to this example. Please ignore if you have a standard 9800.

The 9800-EXP (option) has special software to accommodate foreign telephone systems such as those in eastern Europe. The 9800-EXP permits dialing using second (or even third) dialtones, proper recognition of Euro dialtones / busy signals permitting automatic disconnect and mobile selective calling from a rotary dial pulse telephone. The latter feature is sometimes known as dial click detection and is included in the 9800-EXP version.

<---------- 9800-EXP ONLY **********

Designed and built with pride in the U.S.A.

INSTALLATION AND ADJUSTMENTS

The 9800 contains both a noise squelch and COS circuits with COS input. This gives the 9800 a great deal of interface flexibility. The audio takeoff point can be anywhere from the FM detector (pre-emphasized audio) to the volume control (de-emphasized or flat audio). If connection is made to the FM detector, only three connections are required to most radios. When connecting past the FM detector, a fourth COS connection must be made. Use shielded wires with the shields at both ends connected to chassis ground. (The rear panel barrier strip terminals labeled "GND" are chassis ground). We recommend using spade type crimp-on connectors for ease and reliability. Connect the center wires as follows:

AUDIO IN: The audio input terminal may be connected directly to the FM detector output, or to the high end of the volume control.

If connecting to the FM detector...

1. A COS connection to the receiver is not required.
2. The de-emphasis strap JP-5 must not be cut.
3. The COS polarity strap JP-6 must not be strapped.
4. The noise control P2 must be adjusted to illuminate the front panel noise LED. See "P2 NOISE" page 7 for further explanation.

If connecting to the volume control high side...

1. A COS connection must be made.
2. Cut JP-5 to eliminate built-in de-emphasis.
3. JP-6 must be strapped for the appropriate COS polarity.
4. The noise control P2 must be set at minimum. (fully CCW).
5. The COS threshold control P11 must be set to match the level of the COS takeoff point.

See the appropriate sections below for detailed directions.

Note: Connection must be made to the FM detector if you wish to use the Sampling Simplex mode. A COS interface is not quick enough.

COS: **Note:** The COS input is normally not connected if the AUDIO IN is connected directly to the FM detector.

The COS input can be connected to the noise squelch for carrier operation, or to the DPL/CTCSS squelch if you want the radios' built-in decoder to provide private operation.

Noise Squelch Connection: Connect to a point that has considerable voltage swing when the squelch is opened/closed. The best point to connect is to the collector of the transistor that controls the busy light (if the radio has one). Otherwise, connect to the output of the noise rectifier.

DPL or CTCSS Squelch: The receivers' DPL or CTCSS decoder will have a logic output that goes high or low when a properly encoded signal is received. Connect this point to the COS input.

If the point selected goes more positive (voltage increases) when a signal is received, strap JP-6 center to the + side. If the point goes to a lower voltage, strap JP-6 from center to the - side.

When the COS threshold control P11 has been properly adjusted (described below), and JP-6 properly strapped, the front panel noise LED will go out when a signal is received. This condition must be achieved for proper operation of the interconnect.

AUDIO OUT: Connect to the Mic high line. If Mic loading occurs install a resistor in series with the Audio Out lead and cut JP-3. The resistor should be large enough to prevent Mic loading but small enough to achieve adequate land to mobile audio. Try 100K as a first cut.

PTT: Connect to the base station PTT line.

Note: Some radios will need the Aux. Relay connected to the hookswitch before the transmitter can be activated. Others may require positive keying. See 'Auxiliary Relay' page 41 for details.

TONE The TONE output is used to inject signaling tones separately from voice audio and is normally only connected if option TSU-32P is installed or CTCSS signaling is selected (line 4.3.). However two tone and five / six tone can also use this output if desired. Connect the TONE output past the instantaneous deviation control (IDC) circuit in the transmitter. Preferably directly to the modulator.

The 9800 can place the signaling tones on the AUDIO OUT port or, out the TONE port (except DTMF). We recommend using the TONE port for CTCSS signaling, and we recommend using the AUDIO OUT port for other signaling.

If you are using the TSU-32P and want signaling tones to use AUDIO OUT, remove resistor R-105.

If you prefer to inject these tones directly into the modulator via the TONE port, remove resistor R-48 instead.

If the TSU-32P option is not installed and you want your signaling tones to come out the AUDIO OUT port, there is no need to remove R-48 or R-105.

R-48 is near the Beeps/CW ID pot. R-105 is near IC U-14.

POWER: Connect to a source of 12-14 VDC that can supply up to 300 MA. The 9800 is reverse polarity protected, so a polarity mistake will not damage your 9800.

#################### **WARNING** ####################

The 9800 contains a power supply sensing circuit that continuously monitors the input supply voltage. An instantaneous drop below 12 VDC will cause a microcomputer reset. If the power supply has poor regulation, erratic operation may result.

The purpose of the input voltage sensor is to protect the non volatile EE memory during power up and power down.

If erratic operation such as losing calls occurs, be suspicious of poor regulation from the power supply.

##

ADJUSTMENTS

Initial settings: Set P1, P2 and P11, fully counterclockwise.
Set P3, P4, P5, P6, P9, and P10 to mid rotation.
Set P8 fully clockwise.

POT	PCB NAME	FUNCTION
P1	M->L:	**Mobile to land level:** Initially adjust until mobile DTMF decodes as indicated on front panel DTMF LED. Later, adjust for proper mobile level as heard on telephone.
		Note: DTMF can not decode unless the noise LED is out indicating that a signal is being received.
P2	NOISE:	**Noise (squelch) control:** This control must be set to minimum (fully CCW) if a COS connection is made. If the audio input was connected to the FM detector, advance clockwise to a point just beyond where the front panel noise LED lights without any sign of flickering.
		Note: If the noise light will not come on when the noise control is advanced, you are not connected to the FM detector. Only the direct FM detector output has sufficient noise bandwidth to operate the internal noise squelch and noise light.
P3	RPT:	**Repeat audio level:** Set for correct repeat audio level if repeater controller mode is selected. (0.9.) **Note:** The repeat audio level must be reset if the M->L control has been adjusted.
P4	DTMF:	**Patch to mobile DTMF level:** Sets the DTMF transmitter modulation level of land to mobile DTMF and Semi-Duplex privacy beeps.
P5	BEEPS/CW ID:	**Status beeps & CW ID level:** Adjust for desired modulation level of status beeps or CW ID.
P6	TONE SIGNALLING:	**Tone signaling level to mobile:** Adjusts the Line In Use busy signal modulation and the modulation level of optional signaling tones. (Not functional unless a signaling option is installed.)

P8 RX VOX: **Receiver VOX sensitivity:** Used in VOX simplex mode only. Sets RX audio triggering sensitivity. Should be fully CW in VOX simplex applications. Reduce setting when used through repeaters or trunked systems if land line cannot respond to mobile during hangtime due to noise or tone on the repeater's carrier.

NOTE; When operating through a repeater as a control station patch, it is best to connect the AUDIO IN to the volume control and make a COS connection to the receiver.

P9 TEL VOX: **Telephone VOX sensitivity:** Sets telephone VOX sensitivity for VOX mode, VOX enhancement for sampling mode, call progress tone detection, and dial click detection. Adjust to suit. Mid rotation is about right for most applications.

Occasionally P9 may require critical adjustment to allow proper decoding (counting) of incoming pulse digits when using the optional dial click detector.

P10 L->M **Land to mobile level:** Press the C/D (Connect/Disconnect) switch so that a dialtone is heard. Adjust P10 until the dialtone produces about 3 Khz. of modulation deviation. Cut JP-3 if required.

P11 COS **COS Threshold level:** This control is only adjusted if you are using the COS input and JP-6 has been strapped. Measure the voltage at TP-1 with no signal. Then measure the voltage again with a signal applied. Adjust P-11 until the voltage reading at TP-2 is approximately midway between the two readings previously obtained at TP-1.

For example: If TP-1 reads 2 volts with no signal, and 4 volts with a signal applied to the receiver, TP-2 would be set to read 3 volts.

Important: If JP-6 is properly strapped and P11 properly adjusted, the Noise LED will be illuminated when there's no signal. The noise LED should go out when a signal is received.

JUMPER STRAP OPTIONS

JP-1 Factory Installed. Cut only if the Electronic Voice Delay (Option 9801) is installed. (JP-1 is near U18)

JP-2 Factory installed. Should only be cut if any signaling option has been installed. (JP-2 is near U7)

JP-3 Audio output range strap. Strap in = low level (0-1 V). Strap cut = high level (0-5 V). Strap factory installed. (JP-3 is near U5)

JP-4 Factory installed. Should only be cut if CTCSS option TSU-32P is installed. (JP-4 is near C9)

JP-5 Factory installed. Removal eliminates the built-in de-emphasis network. Cut only if receiver audio is taken past de-emphasis. (e.g. from the volume control). (JP-5 near C36)

JP-6 This strap should not be connected if Audio In has been connected to the FM detector. Strapping JP-6 enables COS operation and selects the required COS polarity. If the selected COS takeoff point goes high when a signal is received, connect the center pad to the + pad. If the COS input goes low when a signal is received, connect the center pad to the - pad. When P11 (COS threshold) is properly adjusted, the noise LED will be illuminated when there's no signal, and go out when a signal is received.

Note: A plastic push-on connector will be found on the center pin. Simply remove and re-install over the two desired pins.

JP-7 Selects whether the Aux. Relay output is normally open (NO) or, normally closed (NC). JP-7 is factory strapped for NO. For NC operation, connect the center pad to the NC pad. It may be necessary to remove the rear panel to make this modification. (JP-7 is near the Aux. Relay K2).

JP-8 JP-8 is not used and does not exist on the board.

JP-9 & JP10 JP-9 and JP-10 are used to enable / disable line in use detection. These straps are mutually exclusive. That is to say that one and only one must be strapped. The 9800 is delivered with line in use detection disabled (JP-9 strapped). To enable line in use detection remove the plastic push-on clip from JP-9 and re-install on JP-10.

AUSTEL VERSION: The Australia version does not have line in use detection, therefore there is no JP-9 and JP-10. There is a permanent strap in the JP-9 position.

PROGRAMMING THE 9800

The 9800 has four easily-accessed programming areas: Operating Parameters, CW ID, Speed-Dial Phone Numbers and Toll Override Selections. To enter one of the programming areas, turn the power off, press and hold the corresponding programming area button (No. 1 for Operating Parameters, No. 2 for CW ID or No. 3 for Speed-Dial Phone Numbers, No. 4 for Toll Override Selections) and simultaneously turn on the power. The display will show **0.x.**, where x is the number of the programming button that is being pressed. Release the button, and programming may begin.

Each programming area has the following features in common:

1) Programming line numbers are displayed with the dots illuminated on the displays. e.g. **0.1.**, **4.5.** etc.
2) Data values are displayed without the dots illuminated. e.g. **00**, **30**, etc.
3) Data is entered at a line number by pressing the desired digits followed by the **'P'** key. Consider the **'P'** key as the enter key.
4) The GOTO **A**ny **A**ddress line is displayed as **A.A.** This line is used to branch to any line number in the current programming area. For example, the current line is **A.A.** and you wish to goto line 30. Enter 3 0 P on the keypad and the display will read **3.0.**
5) Pressing only **P** at the **A.A.** line will advance the line to **0.1.** Pressing only **P** at any other line will advance to the next available programming line.

   Note: In CW ID, Speed-Dialer and Toll Override Selections the next line will be the next numeric line number. In Operating Parameters programming, the next line is often determined by selections made at the current line and is not necessarily the next numeric line (see the 'Programming the Operating Mode and Parameters' section).
6) To view the data at a given line number, briefly press **C** on the keypad and then release it. The display will then show the data for a few seconds and then re-display the current line number. Consider 'C' the data 'see' key.
7) At any point during programming, you may return to the **A.A.** line by holding down the **C** key until **A.A.** appears on the display (approximately three seconds).

MASTER RESET COMMAND

All user programmable selections in Programming Areas No. 1, 2, 3 and 4 can be simultaneously reinitialized to the factory default settings by simultaneously pressing the 3 and 7 keys on the internal keyboard while powering up the 9800 with the front panel power switch. **TO REITERATE**, all user programming including Operating Parameters, CW ID, Speed-dial phone numbers and Toll Override Selections will be lost if a 3+7 reset is performed!

PROGRAMMING THE OPERATING MODE AND PARAMETERS

(Programming Area No. 1)

To enter the parameter programming mode, press and hold button No. 1 on the internal keypad and then simultaneously turn on the power switch. At this point, the display will read 0.1. When you release the No. 1 button, you will see **A.A.**

A.A. (GOTO Any Address)

Press 'P' to start at line 0.1., or enter the line number you wish to go to and then press 'P'. All line numbers and their associated parameters are listed below starting with OPERATING MODE SELECTION.

Viewing or Changing Parameter Values

A quick tap on 'C' will reveal (for a moment) the currently selected parameter of the displayed program line. If the parameter is acceptable, press 'P' to advance to the next program line, or, enter a new parameter and press 'P' to advance to the next program line.

Parameter Checking

If an out of range parameter is entered (e.g. 87 on line 0.2.) pressing 'P' will not cause an advance to the next program line. This prevents you from accidentally entering an unusable choice.

Returning to A.A.

Programming is finished when you arrive back at A.A. If necessary, you can return to a previously programmed line by holding down 'C' for several seconds. This will return you to A.A. Now enter the line number you wish to return to and press 'P'. Line sequential programming will always flow forward from the current line.

Line numbers shown in braces e.g. [1.4.], indicate where programming will continue after a selection.

When you finish programming, simply turn the power off, and then back on to return to the operate mode.

OPERATING MODE SELECTION **[Branch to]**

0.1. Operating Mode

0 = Sampling Simplex [0.2.]
1 = VOX Simplex [0.5.]
2 = Duplex / Repeater Controller [0.8.]
DEFAULT: 1 = VOX Simplex

Note: The FM detector connection method is required for the Sampling Simplex mode! (A COS connection would be too slow)

SAMPLING MODE PARAMETERS

0.2. Sample Width

Select 1-85 (3-255 ms)
3 ms increments per step
DEFAULT: 85 = 255 ms (milliseconds)
Select the smallest sample width compatible with your radio. Start with a large value (255 ms) and reduce a little at a time until the mobile can no longer acquire control by pressing the Mic button. From there, increase the sample width until reliable operation is obtained. The sample width in ms is equal to three times the number you enter.

0.3. Sample Rate

Select 1-9 (.25-2.25 seconds)
.25 sec increments per step
DEFAULT: 3 = .75 sec

Select a sample rate to suit your preference. One sample each .75 second is a good starting point. The sample rate in seconds is equal to .25 seconds times the number you enter.

0.4. VOX Variable Sampling Factor

Select 1-9 [1.4.]
DEFAULT: 9 = 9:1

The VOX enhancement ratio can be varied from 1 to 9. One is equivalent to no enhancement. Nine is maximum enhancement. Pick the enhancement ratio that slows the sample rate the desired amount while the telephone party is speaking.

VOX MODE PARAMETERS

0.5. RxVOX or Carrier Control

1 = RxVOX [0.6.]
0 = Carrier [0.7.]
DEFAULT: 1 = RxVOX

Select RxVOX for operation through remotely located repeaters or simplex. Select CARRIER for simplex operation only. In CARRIER, the telephone party cannot key the base transmitter while the mobile is talking.

0.6. Pulser

0 = Disable
Select 1-99 (.1-9.9 seconds)
.1 sec increments per step
DEFAULT: 0 = Disable
The pulser is normally only used for compatibility with some trunked systems such as the GE MARC V. Select 0 (disable) if not required. Otherwise select a pulse interval just shorter than the repeater hang time. The pulse interval is equal to .1 second times the number entered. A setting of 40 (4 seconds) is about right for the GE MARK V.

Note: This parameter has nothing to do with pulse dialing.

0.7. Activity Timer Mode

1 = Standby [1.4.]
0 = Disconnect [1.4.]
DEFAULT: 1 = Standby

Choose how the activity timer operates in VOX mode. In "Standby", landline activity exceeding the timer limit drops the patch into stand-by (off the air). Pressing * in the mobile restores normal operation. Select "Disconnect" if you prefer the patch to disconnect upon exceeding the activity limit. (The activity time is set at line 2.6.)

DUPLEX MODE PARAMETERS

0.8. Semi-Duplex Privacy Mode

1 = Enable
0 = Disable
DEFAULT: 0 = Disable

In privacy mode, the mobile side of the conversation is not re-transmitted. Thus eavesdroppers only hear one half of the conversation which provides some voice privacy.

0.9. Repeater Controller

1 = Enable
0 = Disable [1.4.]
DEFAULT: 0 = Disable

1 - Selects Duplex Patch with Repeater controller.
0 - Selects Duplex Patch without Repeater controller.

1.0. Repeater On/Off Control Code

Enter any three digits: xxx
protocol: #xxx = ON
##xxx = OFF
DEFAULT: 456

Select any three digits as an over the air repeater on/off control code. Press # plus the three digits to turn on the repeater. Press ## plus the three digits to turn off the repeater.

1.1. Repeater Mode CW ID Interval

0 = Disable
Select 1-99 (.1-9.9 minutes)
.1 min increments per step
DEFAULT: 30 = 3 minutes

Choose the CW ID interval that you prefer for repeater mode. Or, disable repeater mode CW ID by entering 0. The CW ID interval is equal to .1 minutes times the number entered.

1.2. Repeater Hang Time

Select 0-99 (0-9.9 seconds)
.1 sec increments per step
DEFAULT: 30 = 3.0 seconds

Selects the time in seconds that the repeater remains on the air after the input signal drops. The time is equal to .1 second times the number entered.

1.3. Repeater Activity Timer

0 = Disable
Select 10-99 (10-99 seconds)
1 sec increments per step
DEFAULT: 30 = 30 secs

Any single continuous mobile transmission exceeding the repeater activity timer limit puts the repeater off the air. The activity time in seconds is equal to the number entered. Entering 0 disables the activity timer.

GENERAL PHONE PATCH OPERATING PARAMETERS

1.4. Connect Code

0 = * Up
x - xxxx = Multi Digit Access
Protocol: *xxxx
DEFAULT: 0 = * up

Selects the phone patch access code. Enter 0 for * up operation. Otherwise enter a one to four digit code. To access the patch press * plus the selected code. (e.g. You want the access code to be *387. Simply enter 387 P on the keyboard).

1.5. Secret Toll Override Code

x - xxxx = Multi Digit Override
Protocol: *xxxx
DEFAULT: 1234

This is a separate secret code that overrides the programmed toll protection selected on lines 2.0. through 2.5. The access code (1.4.), and the secret toll override code cannot start with the same sequence. e.g. An access code of *2 would not be compatible with a secret code of *2567. Select codes that are distinctly different, such as Access Code = *56 and Secret Code = *3927.

Note: The secret Toll Override Code is inoperable if * up is selected on 1.4. At least one additional digit must be programmed, such as *7, *1 etc.

1.6. Disconnect Code

0 = # Down
1 = # Plus Connect Code
DEFAULT: 0 = # Down

Choose the patch disconnect code. Enter 0 to select # down in most applications. Or enter 1 to select # plus the connect code digits that were selected on line 1.4.

1.7. Five PTT Autodial

1 = Enable
0 = Disable
DEFAULT: 0 = Disable

If enabled, five presses of the mobile Mic button (at about one press second) will automatically dial the phone number stored in speed dialer memory location No.1. Five subsequent presses will cause a disconnect. This feature does not operate in sampling simplex or, with external connection method.

1.8. Dialing Mode

1 = Tone
0 = Pulse
DEFAULT: 1 = Tone

Select how the 9800 will dial your phone calls. Note that tone is much faster if you are in a touch-tone telephone exchange. (The DTMF tone is fully regenerated).

1.9. Access Delay

Select 1-9 (1-9 seconds)
1 sec increments per step
DEFAULT: 3 = 3 secs

Access delay is a user selectable delay to compensate for PTT hang after pressing a DTMF key on mobile and portable radios. Select a value that allows you to hear all of the CW ID and/or dialtone without clipping.

2.0. Manual Dialing

1 = Enable [2.1.]
0 = Disable [2.6.]
DEFAULT: 1 = Enable

Select disable if dialing should only be allowed from the speed dialer memory.

2.1. Toll Restrict Digit Counting

1 = Enable
0 = Disable
DEFAULT: 0 = Disable

Enables/disables toll restrict digit counting. If enabled, a number exceeding ten digits cannot be dialed.

2.2. Prefix Restrict A

0000 = None (display reads ' -')
x - xxxx = Multi Digit Prefix Restriction
DEFAULT: 1 = 'One' Digit Prefix Restriction (Long Distance)

A 'one' may only be set on this line in order for toll override 1-800 dialing to operate.

2.3. Prefix Restrict B

0000 = None (display reads ' -')
x - xxxx = Multi Digit Prefix Restriction
DEFAULT: 0 = 'Zero' Digit Prefix Restriction (Operator)

2.4. Prefix Restrict C

0000 = None (display reads ' -')
x - xxxx = Multi Digit Prefix Restriction (e.g. 976)
DEFAULT: - = None

2.5. Prefix Restrict D

0000 = None
x - xxxx = Multi Digit Prefix Restriction (e.g. 411)
DEFAULT: - = None

Lines 2.2., 2.3., 2.4., and 2.5. allow selecting any four single digit or multi-digit sequences as restricted. Four digits in sequence maximum. e.g. to restrict 0 (operator), 1 (long distance), 976 and 411 enter 0 on line 2.2., enter 1 on line 2.3., enter 976 on line 2.4. and enter 411 on line 2.5.

NOTE: In programming area No. 4 you may create up to ten Toll Override Selections which allow you to have the protection of toll restriction, but allow you to dial specific area codes, portions of an area code or specific phone numbers. See page 25.

2.6. Activity Timer

0 = Defeat
Select 10-99 (10-99 seconds)
1 sec increments per step
DEFAULT: 30 = 30 secs

Enter the patch activity timer time directly in seconds or enter 0 to defeat. The activity timer is reset by pressing the Mic button in sampling or duplex mode. Or by pressing * in VOX mode but only if you entered a 1 on line 0.7.

2.7. Timeout Timer

0 = Defeat
Select 1-99 (.5-49.5 minutes)
.5 minute increments per step
DEFAULT: 6 = 3 minutes

Select the maximum call limit time. The time is equal to .5 minutes (30 seconds) times the number you enter.

2.8. CW ID

1 = CW ID at connect and disconnect.
0 = CW ID at disconnect only.
DEFAULT: 0 = At disconnect only.

After accessing, manual dialing and auto-dialing are delayed until the CW ID is finished if you enter 1.

2.9. Automatic Busy Signal Disconnect

1 = Enable
0 = Disable
DEFAULT: 1 = Enable

3.0. Automatic Dialtone Disconnect

1 = Enable
0 = Disable
DEFAULT: 1 = Enable

3.1. Aux. Relay

0 = Connect [3.3.]
1 = Monitor [3.3.]
2 = Key [3.3.]
3 = Remote Function [3.2.]
DEFAULT: 0 = Connect

0. In connect mode, the relay is on whenever the patch is in connect.
1. In monitor mode, the relay can only be functioned when using Remote Base mode from a touchphone. Pressing 0 turns on the relay. Pressing * turns it back off. The relay returns to off automatically when Remote base operation is completed. This function is normally used to remotely disable CTCSS so the channel can be monitored prior to initiating dispatch from a phone.
2. In key mode, the relay is on whenever the PTT is activated.
3. Remote Function provides a remotely controllable contact closure/opening which can be used for any purpose.

Note: Option 9805 (Aux. Relay) is required for the above.

3.2. Remote Function Access Code

xxx = Any three digits
Protocol: #xxx relay ON
##xxx relay OFF
DEFAULT: 789

Sets the control code for the Aux. Relay Remote Function. Enter any three digits. To turn on the relay press #xxx. To turn off the relay press ##xxx. This functions only if you entered 3 on line 3.1.

Note: The remote function can not be operated while in connect.

3.3. Busy Channel Monitor

1 = Enable
0 = Disable
DEFAULT: 0 = Disable

Determines whether the 9800 will ringout or auto-answer if the channel is busy (Enter 0). Or only when the channel is clear (Enter 1).

3.4. Ringout on Ring Number

0 = Disable [3.8.]
Select 1-9 (1-9 ring)
DEFAULT: 1 = First Ring
Selects which incoming ring starts the ringout alert. Enter 1-9 or enter 0 to disable ringout.

3.5. Ringout Alert

1 = Ring Tone
0 = CW ID
DEFAULT: 1 = Ring Tone

Select whether the ringout alert will consist of a Ring Tone or CW ID. The Ring Tone is similar to a telephone ring. You may also include a DTMF sequence by programming line 3.6.

3.6. Ringout DTMF Sequence

000000 = None (display reads ' -')
x-xxxxxx = DTMF Sequence
DEFAULT: - = None

Enter a 1-6 digit DTMF sequence to be sent during the ringout alert interval. For no DTMF sequence enter 000000.

3.7. Ringout Once or on Alternate Rings

1 = Once
0 = Alternate
DEFAULT: 1 = Once
Only a single ringout alert is allowed in most business radio applications.

3.8. Auto-Answer Ring Number

0 = Disable [4.2.]
Select 1-9 (1-9 ring)
DEFAULT: 0 = Disable

Selects which incoming ring initiates auto-answer. Enter 1-9 or enter 0 to disable. If auto-answer is set to a greater number of rings than ringout (3.4.) you can have ordinary ringout alerts until auto-answer occurs. After auto-answer, remote base, selective calling or talk back paging can be initiated from any telephone.
NOTE: 3.8. must always be set to a larger number than 3.4.

3.9. Telephone Remote Base

0 = Disable [4.0.] **Note:** Must be set
1 = Automatic on Auto-answer [4.2.] to 0 for selective
2 = Access Code Required [4.2.] call operation.
DEFAULT: 0 = Disable

Enter 0 if remote base operation is not desired or if selective calling is to be used. Enter 1 if remote base operation should automatically occur after auto answer. Enter 2 if the access code selected on line 1.4. should be required from the initiating phone after the auto-answer beep.

Note: Only a DTMF telephone can perform a positive disconnect by sending # in choice 1. Otherwise disconnect will occur from activity or timeout timer timeout.

Note: Choice 2 will only function from DTMF telephones.

4.0. Selective Calling or Talk-Back Paging

1 = Selective Call Mode [4.2.]
0 = Talk back Page Mode [4.1.]
DEFAULT: 1 = Selective Call Mode

If talk back paging is selected the 9800 will only deliver a one way voice message to a pager.

4.1. Talk Back Time

Select 1-9 (3-27 seconds)
DEFAULT: 8 = 24 secs

Sets the talk time for talk back paging. Talk time is equal to three seconds times the number entered.

Note: If CTCSS is used as a talk-back paging tone, resistor R8 must be removed. Simply lift one end.

4.2. Mobile to Mobile Signaling **Note:** DTMF signaling does not generate alerting beeps.

1 = Enable
0 = Disable
DEFAULT: 0 = Disable

When enabled, the 9800 can convert a mobile initiated DTMF sequence into any of the optional tone formats. For example: DTMF to Two Tone signaling. Mobile to mobile signaling is only functional if a signaling option is installed. See page 37 for details.

4.3. Signaling Mode (Signaling option is required)

0 = DTMF Signaling [5.3.]
1 = CTCSS Signaling [4.4.]
2 = Two Tone Signaling [4.5.]
3 = Five Six Tone Signaling [4.6.]
DEFAULT: 0 = DTMF Signaling

If a signaling option is installed, the user now has the ability to change the signaling mode.

Note: When selecting CTCSS signaling, it is important to remove R8 from the unit. It may also be necessary to re-adjust signaling levels when changing modes.

4.4. CTCSS Beep Alert (CTCSS selected on line 4.3.)
Select 3-9 (3-9 beeps)
DEFAULT: 6 = 6 Beeps

Select the number of alerting beeps that accompany the selected CTCSS tone for selective calling. See Table 2 for CTCSS selective call codes.

4.5. Two Tone Group Call or Diagonal Tone (Two Tone selected)
1 = Group Call
0 = Diagonal
DEFAULT: 1 = Group Call
Note: See Table 3 for Two Tone selective call codes.

4.6. Five Tone Preamble (Five Six tone selected on line 4.3.)
1 = Enable [4.7.]
0 = Disable [4.8.]
DEFAULT: 0 = Disable
Select the selective call code and all appropriate 5/6 tone parameters from Table 4.

4.7. Preamble Tone
Select tone 0-9
DEFAULT: 0 = Tone 0

4.8. First Tone Select
Select tone 0-9
DEFAULT: 0 = Tone 0

4.9. Second Tone Select
Select tone 0-9
DEFAULT: 0 = Tone 0

5.0. Repeat Sequence
Select 1-9 (Repeat the tone sequence 1-9 times)
DEFAULT: 1 = Once

5.1. Duration of Tones
Select 1-99 (1-99 ms)
DEFAULT: 33 = 33 ms

5.2. Tone Group Select
1 = EIA
2 = ZVEI1
3 = CCIR/EEA
4 = CCIT
5 = EURO
6 = ZVEI2
DEFAULT: 1 = EIA (See Table 4)

5.3. Remote Programming Enable

0 = Disable
1 = Enable
DEFAULT: 1 = Enable

5.4. Remote Programming Access Code (See page 29)

x - xxxx = Multi Digit Access Code
DEFAULT: 2345

********** 9800-EXP ONLY ---------->

The EXP version has two user programmable lines 5.5. and 5.9. which allow customizing the 9800 for local phone conditions:

5.5. Ability to Dial a Second Dialtone

1 = Enabled
0 = Disabled
DEFAULT: 1 = Enabled

When enabled, dialing a second dialtone is possible. The procedure used is different depending upon whether pulse or tone dialing (1.8.) is selected. See "MANUAL DIALING WHEN SECOND DIALTONE IS REQUIRED" page 31 for further details about dialing second dialtones.

IMPORTANT NOTE: The following programming lines must not be altered from the values shown: 5.6. = 6
5.7. = 33
5.8. = 24

If programming branches to one of these lines you may exit program mode by turning the power off and then back on, or hold down the 'C' key until you see A.A. You can go to any desired line number directly from A.A. Simply enter the desired line number and press 'P'. Or, repetitively tap the 'P' key until the desired line number is reached.

5.9. Call Progress, Tone Fill

Select 5 - 90 (10 - 180 Milliseconds)
2 Millisecond increments per step
Or, Select 91-99 (200-1000 Milliseconds)
100 Millisecond per step (91 = 200 mS, 92 = 300 mS, etc.)
DEFAULT: 10 = 20 Milliseconds

This parameter should normally not be changed. However if local busy signal or dialtones have short gaps the Tone Fill parameter can be used to fill them in. If either dialtone or busy signal disconnect fail to operate, increasing the Tone Fill time may be indicated. Do not add more fill than is needed to restore proper operation.
<---------- 9800-EXP ONLY **********

Note: If you are attempting to use this Ver 3.0 manual to program an earlier version, lines 0.1. - 4.2. are unchanged. To program lines 4.3. and up it is essential to obtain the correct manual. Or, upgrade your older unit to version 3.0. Call CSI for details.

PROGRAMMING THE CW ID

(Programming Area No. 2)

To enter the CW ID programming mode, press and hold button No. 2 on the internal keypad and then simultaneously turn on the power switch. At this point, the display will read 0.2. When you release the No. 2 button, you will see **A.A.**

A.A. (GOTO Any Address)

Press 'P' to start at character position 0.1., or enter the character position number you wish to go to and then press 'P'.

Viewing or Changing Character Codes

A quick tap on 'C' will reveal (for a moment) the currently selected character code for the displayed character position. If the character code is acceptable, press 'P' to advance to the next character position, or, enter a new character code and press 'P' to advance to the next character position.

Character Code Range Checking

If a number greater than 38 is entered, pressing 'P' will not cause an advance to the next character position. This prevents you from accidentally entering an unusable choice.

Returning to A.A.

If desired, you can return to a previously programmed character position by holding down 'C' for several seconds. This will return you to A.A. Now enter the character position (line number) you wish to return to and press 'P'.

PROGRAMMING

The CW ID message sent from the 9800 may consist of up to 15 characters. To program the message, enter the desired character codes (from Table 1) starting at character position **0.1.** through the length of the string. If the message is less than 15 characters, it must be terminated with code 38 (Message End). For example, to program the CW ID message 'CSI':

0) Enter CW ID Programming Mode as explained above
   (Hold down key No. 2 and switch on the power)
1) From the **A.A.** line hit 'P'
2) From **0.1.** enter: ' 2 P' for the character "C"
3) From **0.2.** enter: '18 P' for the character "S"
4) From **0.3.** enter: ' 8 P' for the character "I"
5) From **0.4.** enter: '38 P' to end the message.
6) Turn off the power, and then back on, to return to operate mode with the newly programmed CW ID message.

TABLE 1 CW ID CHARACTER CODES

A = 0	G = 6	M = 12	S = 18	Y = 24	5 = 30	WORD
B = 1	H = 7	N = 13	T = 19	Z = 25	6 = 31	SPACE= 36
C = 2	I = 8	O = 14	U = 20	1 = 26	7 = 32	
D = 3	J = 9	P = 15	V = 21	2 = 27	8 = 33	SLANT
E = 4	K = 10	Q = 16	W = 22	3 = 28	9 = 34	BAR = 37
F = 5	L = 11	R = 17	X = 23	4 = 29	0 = 35	
						MESSAGE
						STOP= 38

e.g. CW ID message desired is 'CSI' Enter 2, 18, 8, 38

SPEED DIAL PHONE NUMBER PROGRAMMING

(Programming Area No.3)

To enter the speed dial phone number programming mode, press and hold button No. 3 on the internal keypad and then simultaneously turn on the power switch. At this point, the display will read 0.3. When you release the No. 3 button, you will see A.A.

A.A. (GOTO Any Address)

Press 'P' to start at speed dial location 0.1., or enter the speed dial location you wish to go to and then press 'P'.

Viewing or Changing Phone Numbers

A quick tap on 'C' will reveal the phone number stored at the displayed line number. The phone number is displayed digit by digit until all digits in the number have been shown. If the phone number is acceptable, press 'P' to advance to the next line number or, enter a new phone number and press 'P' to advance to the next line number. The phone number stored at any line number can be erased by entering three zeros. (000P).

Note: If there is no phone number stored at the present line number, pressing 'C' will flash the current line number number once instead of showing a phone number.

Programming *, Pause or #

The No. 1, 2 and 3 keys on the keypad are used as dual input keys. To program a phone number which contains any of these digits, briefly press the key and continue with the number, as you would with any other digit. To program a *, press the No. 1 key until a single bar '| ' is added to the display (approx. 3 seconds) then release the key. To program a pause, press the No. 2 key until a dash ' -' is added to the display. To program a #, hold down the No. 3 key until a double bar '||' is added to the display.

Note: A single bar '| ' will look like the digit one ' |', except that the single bar is shifted to the left a little.

Note: The setting of line 5.5. determines whether the * means to dial a * or wait for a second dialtone.

Phone Number Length Checking

A maximum of 16 digits may be entered in any speed dial location. If too many digits are entered, the display will revert back to showing the current location number. At this point, re-enter a shorter phone number.

Returning to A.A.

If desired, you can return to a previously programmed speed-dial memory by holding down 'C' for several seconds until A.A. shows on the display. Now enter the speed dial line number you wish to return to and press 'P'.

Returning to Operate

To return to normal operation, switch off the power and then back on. You can now use your newly programmed speed dial numbers!

TOLL OVERRIDE PROGRAMMING

(Programming Area No. 4)

To enter the TOLL OVERRIDE programming area, press and hold button No. 4 on the internal keypad and then simultaneously turn on the power switch. At this point, the display will read 0.4. When you release the No. 4 button, you will see A.A.

A.A. (GOTO Any Address)

Press 'P' to begin entering TOLL OVERRIDE selections into memory line 0.1., or enter the TOLL OVERRIDE line number you wish to go to and then press 'P'.

Viewing or changing TOLL OVERRIDE codes

A quick tap on 'C' will reveal the user programmed TOLL OVERRIDE code at the current line number. The TOLL OVERRIDE code is displayed digit by digit until all digits in the code have been shown. If the TOLL OVERRIDE code is acceptable, press 'P' to advance to the next programming line and enter the next override code etc. Any memory line number can be erased by entering three zeros followed by P (000P).

Note: If there is no TOLL OVERRIDE code programmed at the current line number, pressing 'C' will flash the current line number once instead of showing a programmed TOLL OVERRIDE code.

Programming a Wildcard (*)

The No. 1, key on the keypad is used as a dual input key. A brief press enters a 1. If the 1 button is held down for three or more seconds it becomes a * entry. The display will show '| ' which indicates a * has been entered.

Note: A single bar '| ' will look like the digit one ' 1', except that the single bar is shifted to the left a little.

Returning to A.A.

If desired, you can return to a previously programmed TOLL OVERRIDE location by holding down 'C' for several seconds until A.A. shows on the display. Now enter the TOLL OVERRIDE line number you wish to return to and press 'P'.

Returning to Operate

To return to normal operation, switch off the power and then back on. Your newly programmed TOLL OVERRIDE codes are now active.

HOW TO CREATE TOLL OVERRIDE CODES

Programming area No. 4 allows you to create up to ten "exceptions" to Toll Restricts which have been programmed in Programming Area No. 1 lines 2.2. - 2.5. Toll Override selections may be up to 16 digits in length.

Suppose you wish to be toll call protected, but at the same time, you would like to be able to call select area codes, exchanges within select area codes or specific phone numbers within select area codes. First, make sure you have 1+ dialing restricted by programming a 1 on line 2.2. and operator restrict by programming a 0 on line 2.3., both in Programming Area No. 1. Then using the examples below as a guide, program up to ten TOLL OVERRIDE selections on lines 0.1. - 1.0 in Programming area No 4.

LINE NUMBER	TOLL OVERRIDE	DESCRIPTION
0.1.	1818	Allows dialing to all numbers within area code 818.
0.2.	13106	Allows dialing to all phone numbers beginning with a 6 within area code 310.
0.3.	1213784	Allows dialing phone numbers beginning with 784 within area code 213.
0.4.	19	Allows dialing to all area codes beginning with a 9.
0.5.	12*7	The wildcard * means 'any number'in the position occupied. This example allows dialing to all area codes that begin with 2 and end with 7. Specifically 207, 217, 227, 237, 247, 257, 267, 277, 287, and 297.
0.6.	00	Allows dialing the 00 operator.
0.7.	0115234	Allows dialing all numbers within city code 34 of country code 52.
0.8.	01152675551212	Allows dialing only to phone number 555 1212 within city code 67 of country 52.

REMOTE PROGRAMMING

In addition to the built-in programming method which has been thoroughly described on preceding pages, your 9800 can also be programmed over the air from a mobile or portable radio using DTMF (Touch-tone) commands, or from any DTMF telephone (must be on a separate phone line) using the telephone's DTMF keypad.

We recommend that you do not proceed with remote programming until you thoroughly understand and have mastered the built-in programming method using the internal keypad.

NOTE: The methods for remote programming from a radio vary somewhat from those used for remote programming from a telephone. Please note the differences.

DTMF or BEEP FEEDBACK

Your 9800 has been designed to provide either DTMF transpond feedback or audible beep feedback during remote programming. Feedback lets you verify the status of each command you send.

Beep Feedback: Beep feedback generates a single beep in response to your command if new data has been entered. If the data you are entering is unchanged (same) there will be a two beep response. The latter is useful to verify that data has been correctly programmed by repeating the entry sequence until the double beep is heard.

Beep feedback can be used in either over the air or over the phone remote programming.

DTMF Transpond: Used only if you have either a Connect Systems CD-1 or CD-2 Communications Decoder connected to the radio you will be using to perform the remote programming. DTMF transponds let you 'see' the programming line number and the corresponding data value on the front panel display after each programming command has been sent.

DTMF transpond cannot be used when programming from a telephone because CD-1/CD-2's are not designed to be connected to phone lines.

REMOTE PROGRAMMING ACCESS CODE

Before programming can begin, you must know the remote programming access code. This code can be verified or user programmed using the built in keyboard. The remote programming access code is located in programming area No. 1 on line 5.4. The default access code is: 2345.

SELECTING THE DESIRED PROGRAMMING AREA AND FEEDBACK

The type of feedback (beep or DTMF transpond) desired as well as the programming area (1-4) you wish to program are selected by appending the access code with a digit from the Table below.

In over the air programming, you have a choice of either beep response or DTMF transpond. Therefore select 1-8.

When programming from a telephone, you are limited to beep response feedback. Therefore select 1-4 only.

1 = Programming area No. 1 with beep response.
2 = Programming area No. 2 with beep response.
3 = Programming area No. 3 with beep response.
4 = Programming area No. 4 with beep response.
5 = Programming area No. 1 with DTMF transpond.
6 = Programming area No. 2 with DTMF transpond.
7 = Programming area No. 3 with DTMF transpond.
8 = Programming area No. 4 with DTMF transpond.

SIGNIFICANCE OF THE * AND # KEYS

The * and # keys on a DTMF pad are in the same physical position as the C and P keys on the built-in keyboard. When in remote programming, the * and # serve similar functions. It's important to understand how these keys operate in remote programming mode:

1. The # key acts similar to the P key in most respects:
   a) When new data has been typed at the current programming line, the # serves as an enter key. The programming line number does **NOT** advance if data has been entered.
   b) If data has not been entered since last using the # as an enter key, the # then advances the programming line to the next sequential line number (not the next logical line number as when programming with the built-in keyboard).

2. The * key acts similar to the C key in most respects:
   a) Hold down at any time for more than one second to return to A.A.
   b) Enter 0* at any time to return to A.A.
   c) Move to any desired line number by entering the line number followed by *. For example 14* would position you at line 1.4.
   d) A quick tap (less than one second) of the * will cause the 9800 to transpond the data at the current line number if using DTMF transpond mode. A quick tap of the * has no effect if using beep feedback mode.

3. When needed, A long press is one second rather than three seconds when entering a *, pause or # in the speed dialer area (Programming Area No. 3).

4. To exit remote programming mode, simply hit 0* to return to A.A. After hearing the Morse code AA (dit-dah dit-dah) then enter * for more than one second. The 9800 will respond with the Morse K (dah-dit-dah) and then return to the operate mode.

   Note: If there is no DTMF programming activity for 25 seconds, the 9800 will automatically return to the operate mode.

REMOTE PROGRAMMING

To enter Remote programming mode, simply hold down the # key for four seconds followed by the remote programming access code and finally the appended digit from the Table under SELECTING THE DESIRED PROGRAMMING AREA AND FEEDBACK.

Example: The remote programming access code is 2345 and you wish to change a selection in Program Area No. 1 and also have DTMF transponds to your CD-1 / CD-2 Decoder Unit. Make the following entry on your DTMF pad, be sure to hold the # for four seconds:

#23455

When entering programming area No. 1, No. 3 or No. 4 an AA (dit-dah dit-dah) will be heard. When entering programming area No. 2 the currently programmed CW ID will be heard rather than AA.

Below are examples of changing the interconnect access code to *825. This is programmed in Programming Area No. 1, on line 1.4.

Example of over the air programming:

You wish to change the access code for the interconnect to *825 (programmed in Area No.1) and utilize DTMF feedback.

Enter the programming mode access code appended with the 1-8 digit which selects the area to be programmed and the feedback response. Append a 5 for Programming Area No. 1 and DTMF response.

Enter #23455 (Remember, four seconds for the #).

The 9800 will respond with AA in Morse (dit-dah dit-dah).

Now hit 14* to select line 1.4. Then enter 825#.

The 9800 will transpond a DTMF code after you release your PTT button. The first display on your CD-1 or CD-2 will be the programming line number; 14--, the next display will be the newly programmed data; 825-.

Note: Programming lines that have only two digits of data contain the programming line number (left two digits) and the data (right two digits) in a single display sequence.

Return to A.A. by hitting 0* you will then hear Morse code AA (dit-dah dit-dah) after you let go of the PTT button.

At this point you could either branch to a new programming line to make additional programming changes, or...

Exit remote programming mode by holding down the * for more than one second. The 9800 will respond with the Morse K (dah-dit-dah) and then return to the operate mode.

Example of programming from a telephone:

Before you begin two points must be made:

1. Remember, when Remote Programming over the air, the access code is preceded with a four second #. When Remote Programming from a telephone a four second * is used if the 9800 is set for remote base operation, otherwise use a four second #. If in doubt first try #, if no luck try *.

2. If line 3.8. has been set to 0 (no auto-answer) and line 5.4. is set to a 1 (Remote Programming enabled), then a default auto-answer will occur on ring number 11. If line 3.8. is not set to 0, then it must be set to a larger number than 3.4. has been set. Auto-answer will occur on the ring number you have set on line 3.8.

You wish to change the access code for the interconnect to *825 (set on line 1.4. in Programming Area No.1)...

Call the phone number of the line the 9800 is connected to. Upon auto-answer, enter the * or # for four seconds followed by 23451 (access code appended with a 1 to enter Programming Area No. 1). Transponds will be beep responses.

The 9800 will respond with AA in Morse (dit-dah dit-dah). Now hit 14* to select line 1.4. Then enter 825#.

If you hear a single beep in response, you have entered new data. You may now verify your entry by entering 825# a second time. If the current entry matches the previous entry, a double beep will be heard.

Return to A.A. by hitting 0*, you will then hear Morse code AA (dit-dah dit-dah) which lets you know you are at A.A. You may now program other lines, or...

Exit remote programming mode by holding down the * for more than one second. The 9800 will respond with the Morse K (dah-dit-dah) and then return to the operate mode. Hang up the phone as soon as you hear the 9800 disconnect.

Note: If there is no DTMF programming activity for 25 seconds, the 9800 will automatically return to the operate mode.

Important: The 9800 displays all DTMF digits on the internal display as they are decoded. The DTMF digits * and # are shown as a '| ' and '||'. If the 9800 is set for pulse dialout (1.8. set to 0) the display shows the phone number currently being outpulsed rather than the incoming DTMF.

PLACING OUTGOING CALLS

DIALING A CALL MANUALLY: From the mobile press *, then enter the access code (if any) that was selected on line 1.4. or, enter the secret toll override access code that was set on line 1.5. If the access delay on line 1.9. is properly set, you will hear dialtone or CW ID start without clipping or delay. In VOX or sampling modes wait until the dialtone drops off before you start to dial. In duplex mode you may begin dialing as soon as you hear the dial tone. After dialing, the next thing heard will either be ringing or a busy signal. If 2.9. is enabled, the 9800 will automatically disconnect if the number that was called is busy.

********** 9800-EXP ONLY ---------->

MANUAL DIALING WHEN SECOND DIALTONE IS REQUIRED: Programming line 5.5. must be set to 1 to allow second dialtone dialing. The procedure is a bit different for Tone and Pulse dialing.

Pulse dial: If 1.8. is set to 0 (pulse dial) a second dialtone is dialed by preceding the number intended for the second dialtone with *. This causes the 9800 to wait until the second dialtone appears and to then automatically continue dialing. Example: You need to call 555 3456 after dialing an 8 for long distance. Simply dial 8 * 555 3456 as a complete sequence immediately following the drop of first dialtone. The 9800 will then pulse dial the 8 and wait until the second dialtone is detected and then continue the 555 3456 portion. A beep is heard about every six seconds while waiting for the second
dialtone which lets you know the 9800 is still actively processing your call.

Tone dial: If 1.8. is set to 1 (tone dialing) Dial the first portion plus a * after the first dialtone drops. Wait until the second dialtone is heard and drops and then dial the remaining portion. Example; You need to call 555 3456 after dialing an 8 for long distance. Simply dial 8* after the first dialtone drops and 555 3456 after the second dialtone drops. A beep is heard about every six seconds while waiting for the second dialtone.

Note: Third or more dialtones can also be accommodated by simply adding a * after each group requiring a wait for another dialtone. Do not append a * on the final group or you will be forever waiting for another dialtone.

<---------- 9800-EXP ONLY **********

PROGRAMMING THE SPEED DIALER FROM THE MOBILE: Writing a phone number into the speed dialer memory from the mobile is accomplished with a slight variation on ordinary manual dialing. Before you enter your access code, send 9 followed by the desired memory location number. e.g. You wish to place a call to 277-1463 and simultaneously add the number to speed dial memory location 6. From the mobile, enter 9 6 then the access code. When the dialtone is heard, dial 277-1463 just as you would in ordinary manual dialing. You will never have to manually dial 277-1463 again!

Note: The 9 as used above means **WRITE** the phone number to be dialed into the memory location specified immediately following the 9.

Note: Phone numbers containing a * for second dialtone wait cannot be remotely programmed if using tone dialing. These numbers can only be programmed using the internal keyboard.

You can program a *, pause or # as part of a speed dial sequence if desired. The digits 1,2 and 3 are interpreted as *, pause and # if held down for 4-5 seconds during the dialing process.

For example: you wish to program; 8 pause 472-8197 into memory location No. 3. Enter in order; 9 3 then your access code. Then after dialtone enter 8, long 2, 472-8197. The number you have dialed is now properly loaded into memory location No. 3. However the long 2 will cause a misdial of the immediate call. When a *, pause or # has been used, do not let the call go through. Send the disconnect command after the number has been dialed and call back using the speed dialer. The call will now dial properly.

1-800 DIALING: The 9800 will allow dialing to toll free 1-800 numbers even if 1 is set as a restricted first digit. However, if you are going to restrict 1, you must restrict it on line 2.2.

CALL WAITING: If line in use detection has been enabled, the 9800 checks to see if the line is in use when a mobile attempts access. If the line is free the mobile will hear dialtone and can proceed with his call. If the line is in use, the 9800 will send a special busy signal to the mobile and revert to the stand-by condition. At the same time, Call Waiting beeps let those using the line know that a mobile unit would like to use the line. When the telephone users hang-up, beeps let the mobile know that the line is now free to use.

The mobile can cut-in on the call if desired by using the secret toll override code (1.5.) after hearing the line in use busy signal. A three way conversation can now take place.

NOTE: Line in use detection / Call waiting is not available in the AUSTEL (Australian) version.

PLACING A CALL WITH THE SPEED DIALER: Once a phone number has been stored, calling back is a snap! Simply precede the access code with the appropriate memory location number. Soon, your intended number will be ringing. Example: Your access code has been set as * only. You wish to call a friend whose phone number has been previously stored in location 24. Simply enter 24 * on your mobile keypad. Another example: Your access code is *391, and you wish to speed dial the number in memory location No. 7. Enter 7*391, that's all there is to it!

Note: An error message consisting of eight beeps will be heard if you attempt to speed dial an unused memory location.

LAST NUMBER REDIAL: The last phone number called is always automatically stored at speed dial memory location NO. 0. To redial the last number called, simply precede the access code (1.4.) with 0. Similar to using the speed dialer. e.g. 0*, 0*391 etc.

HOOK FLASH: The 9800 has built-in hook flash logic to operate certain phone company provided features. To flash, simply press * three times (***). WARNING: The 570 ms. (on-hook) flash can cause a disconnect on some phone lines.

ACTIVITY TIMER: Once your number has been dialed, the activity timer starts operating. The activity timer behaves per selections made on program lines, 0.7. and 2.6. A warning beep is heard every two seconds during the second half of the programmed timeout interval. The beeps warn of impending timeout.

Sampling and Duplex Modes: The activity timer is constantly reset while the mobile is transmitting, and starts timing when the mobile stops transmitting. Upon hearing timeout warning beeps, a brief press of the mobile Mic button (must be long enough for acquisition in sampling mode) resets the activity timer. Failure to reset will result in a disconnect.

Note: The Vox variable sampling parameter (0.4.) is automatically set to 1 while the activity timer or the timeout timer is beeping. This results in a faster sampling rate making it easier and quicker for the mobile to reset the timer(s).

Vox Mode: The activity timer measures phone line audio activity. Phone line activity causing a single transmission exceeding the time set in 2.6. will cause one of two responses as selected on line 0.7.

1. If a "1" (stand-by) was programmed on line 0.7. the 9800 will simply go off the air, but will not disconnect your call. Pressing * from the mobile will restore normal operation. (Assuming you wish to continue listening to the audio that caused the timeout).

2. If a "0" (disconnect) was programmed on line 0.7. the 9800 will disconnect, and the call in progress will be lost.

TIMEOUT TIMER: Calls will automatically disconnect at the end of the time you selected on line 2.7. Two quick beeps heard in succession every two seconds during the final twenty seconds warn that time out is imminent. The timeout timer can be reset by the mobile by pressing *.

DISCONNECTING WHEN THROUGH: If a "0" was entered on line 1.6. simply press # to disconnect. If a "1" was entered, press # plus the connect digits that were selected on line 1.4.

FIVE PRESS AUTO DIAL: If a "1" was entered on line 1.7., the phone number residing in speed dial memory location No. 1 can be automatically dialed by pressing the mobile Mic button five times in succession. When the call is finished, five more presses will cause disconnect. WARNING: If you press too fast or too slow the 9800 will not respond. The correct rate is about one press per second. This timing is required to keep rapid mobile fading and normal on channel Mic button pressing from falsing the patch on and/or off.

> **Note:** Disconnecting with five presses of the Mic button operates in the Vox and Duplex modes only.

INCOMING CALLS

RINGOUT: Lines 3.3. through 3.7. allow you to customize ringout for your application. Ringout is how the 9800 alerts you to the presence of an incoming call.

When a call comes in, the 9800 first checks to see if the channel is in use (3.3.). The incoming rings are counted (3.4.) before a mobile alert is sent. The alert can consist of a Ring Tone that sounds like a telephone ringing or a CW ID (3.5.). You may also preface the ringout with a sequential DTMF sequence (3.6.). The user programmable DTMF sequence can be used to operate attention getters such as a horn honker. The type of alert selected can be set to occur only once or on alternate rings (3.7.) of the incoming call.

To answer your call from the mobile, simply enter your access code (1.4.). When you complete your call, send the disconnect code (1.6).

AUTO ANSWER: The 9800 must be set to automatically answer (3.8.) incoming calls if you wish to use the Remote Base, Select Call or Talk Back Paging Modes.

> **Note:** If ringout is set to occur earlier in the ring cycle (3.4) than auto answer (3.8), it is possible to receive ordinary incoming calls plus use the modes which require an auto answer.

TELEPHONE REMOTE BASE: You can dispatch and have full use of your system from any telephone by entering a 1 or 2 on (3.9.)...

Enter 0 if you are going to use mobile selective calling.

Enter 1 if you would like to access your radio system (Remote Base) from any phone without the need to enter the system access code.

Enter 2 if you prefer that an access code is required to enter remote base mode. Dial as described below after the beep:

From DTMF Telephones: Use Mobile Access Code programmed on 1.4.

From Dial Pulse Phones: Will only operate if mobile access code is * (1.4. = 0) and DTMF signaling has been selected. Simply dial 0 from the dial pulse phone.

When your remote base dispatch is finished, send the disconnect code (1.6) before you hang-up. If you forget, built in safe-guards such as call progress tone detection will automatically disconnect the 9800 on most phone systems.

Note: A dial pulse phone can not turn off the 9800 when through. The timeout or activity timer must perform the disconnect. (Or, the mobile can disconnect by sending a #)

SELECTIVE CALLING: Any mobile or portable radio equipped with an appropriate decoder can be selectively called from either a DTMF or dial pulse telephone...

From DTMF Telephones: After the auto-answer beep, enter the desired selective call sequence followed by *.

For Example:

DTMF :	XXXXX*	(x's any length, any sequence)
CTCSS :	XX*	see table 2 (line 4.3. = 1)
Two Tone :	XXX*	see table 3 (line 4.3. = 2)
5/6 Tone :	XXX*	see table 4 (line 4.3. = 3)

The 9800 will hold the auto answered call for thirty seconds giving the mobile time to respond. To answer a call and activate the two way capability, the mobile must send the connect code (1.4.). When the call is completed, the mobile should send the disconnect code (1.6.).

From Dial Pulse Phones: (Dial click detect or EXP option required). After the auto-answer beep, dial 0 followed by the desired selective call sequence.

For example:

DTMF :	0XXXXX*	(X's any length, any sequence)
CTCSS :	0XX*	see table 2 (line 4.3. = 1)
Two Tone :	0XXX*	see table 3 (line 4.3. = 2)
5/6 Tone :	0XXX*	see table 4 (line 4.3. = 3)

The 9800 will hold the auto answered call for thirty seconds giving the mobile time to respond. To answer a call and activate the two way capability, the mobile must send the connect code (1.4.). When the call is completed, the mobile should send the disconnect code (1.6.).

TALK BACK PAGING: A 3-27 second (4.1.) one way voice message can be delivered to any pager or mobile from any telephone. After the auto-answer beep enter the appropriate selective call digits shown below:

From DTMF Telephones: After the auto-answer beep, enter the desired selective call sequence followed by *.

For Example:

DTMF :	XXXXX*	(x's any length, any sequence)
CTCSS :	XX*	see table 2 (line 4.3. = 1)
Two Tone :	XXX*	see table 3 (line 4.3. = 2)
5/6 Tone :	XXX*	see table 4 (line 4.3. = 3)

From Dial Pulse Phones: After the auto-answer beep, dial 0 followed by the desired selective call sequence.

For example:

DTMF :	0XXXXX*	(X's any length, any sequence)
CTCSS :	0XX*	see table 2 (line 4.3. = 1)
Two Tone :	0XXX*	see table 3 (line 4.3. = 2)
5/6 Tone :	0XXX*	see table 4 (line 4.3. = 3)

REMOTE BASE WITH SELECTIVE CALLING: (From DTMF phones only) Remote Base with selective calling can be accessed by entering the connect code (1.4.) after the auto-answer beep. You can then send any selective call code by entering the appropriate digits followed by *. (Remote base mode 3.9. must be set to 0 if selective calling is to be used).

Example: You've selected *7 as your access code (1.4.) and you wish to send the selective call code 639. After the auto answer beep enter *7 639*.

MOBILE TO MOBILE SIGNALLING: The 9800 will cross mobile DTMF to CTCSS, Two Tone or 5/6 Tone for the purpose of "waking up" another mobile, portable or pager. (Singalling option must be installed)

If mobile to mobile signalling has been enabled (4.2.) simply send the same mobile selective call code that would be used from a phone. Except that the code must end with # rather than *.

If you wish to perform mobile to mobile signalling during a phone call you must end the selective call sequence with a *.

For example:
Patch idle; XX# for CTCSS, XXX# for 5/6 or 2 Tone.
Phone call in progress; XX* for CTCSS, XXX* for 5/6 or 2 Tone.

OPERATION THROUGH REPEATERS OR TRUNKED SYSTEMS
(Only possible in the VOX mode)

Operating the 9800 through a repeater appears to the user as straight simplex operation. It makes no difference if the repeater is DPL/CTCSS or carrier activated, or if the repeater has hang time. Actually, three or four seconds of hang time will improve operation because there will be fewer noises to distract the conversation.

The optional .5 second, 9801 electronic voice delay board is highly recommended when using the 9800 through repeaters to eliminate word clipping or loss.

Note: See comments on setting the RX VOX control on page 8.

CALL PROGRESS TONE DETECTION

CALL PROGRESS TONE DETECTION: The 9800 incorporates very sophisticated software algorithms that automatically sense the presence of dialtone and/or busy signals. The method used will function with any tone frequencies. There is nothing to adjust or maintain, it's completely automatic!

Note: On lines 2.9. and 3.0. you can selectively enable or disable busy signal disconnect and dialtone disconnect for special applications.

********** 9800-EXP ONLY ----------> Programming line 5.9. allows customizing call progress tone detection to operate on most any telephone system. <---------- 9800-EXP ONLY **********

CTCSS SELECTION TABLE

FREQ	CODE	SELECT	FREQ	CODE	SELECT	FREQ	CODE	SELECT
67.0	XZ	10	107.2	1B	23	167.9	6Z	36
71.9	XZ	11	110.9	2Z	24	173.8	6A	37
74.4	WA	12	114.8	2A	25	179.9	6B	38
77.0	XB	13	118.8	2B	26	186.2	7Z	39
79.7	SP	14	123.0	3Z	27	192.8	7Z	40
82.5	YZ	15	127.3	3A	28	203.5	M1	41
85.4	YA	16	131.8	3B	29	210.7		42
88.5	YB	17	136.5	4Z	30	218.1		43
91.5	ZZ	18	141.3	4A	31	225.7		44
94.8	ZA	19	146.2	4B	32	233.6		45
97.4	ZB	20	151.4	5Z	33	241.8		46
100.0	1Z	21	156.7	5A	34	250.3		47
103.5	1A	22	162.2	5B	35			

TABLE 2

The CTCSS selective call code digits (10-47) define all 38 EIA standard CTCSS tones. To find the call code for a specific CTCSS frequency, locate the frequency in Table 2. The two digit call code is found adjacent in the select column.

NOTES:

1. CTCSS is an option and will not function unless factory installed.

2. The length of CTCSS alerting can be varied by the quantity of beeps selected in (4.4.)

3. See 'Incoming Calls' in the Operation section to determine the proper use of the selective call codes determined from this table.

Example: The selective call code required to signal 131.8 Hz. is: 29

TWO TONE GROUP SELECTION TABLE

TONE SEL	MOT GPA	MOT GP1	MOT GP2	MOT GP3	MOT GP4	MOT GP5	MOT GP6	GE GPA	GE GPB	GE GPC
0	358.9	330.5	569.1	1092.4	321.7	553.9	1122.5	682.5	652.5	667.5
1	398.1	349.0	600.9	288.5	339.6	584.8	1153.4	592.5	607.5	712.5
2	441.6	368.5	634.5	296.5	358.6	617.4	1185.2	757.5	787.5	772.5
3	489.8	389.0	669.9	304.7	378.6	651.9	1217.8	802.5	832.5	817.5
4	543.3	410.8	707.3	313.0	399.8	688.3	1251.4	847.5	877.5	862.5
5	602.6	433.7	746.8	953.7	422.1	726.8	1285.8	892.5	922.5	907.5
6	668.3	457.9	788.5	979.9	445.7	767.4	1321.2	937.5	967.5	952.5
7	741.3	483.5	832.5	1006.9	470.5	810.2	1357.6	547.5	517.5	532.5
8	822.2	510.5	879.0	1034.7	496.8	855.5	1395.0	727.5	562.5	577.5
9	912.0	539.0	928.1	1063.2	524.6	903.2	1433.4	637.5	697.5	622.5
DG	569.1	569.1	979.9	569.1	569.1	979.9	979.9	742.5	742.5	742.5

TWO TONE SEQUENTIAL CALL CODES

(line 4.3. = 2)

A 1000 call two tone sequential sequence consists of three digits. The first digit selects the group. The second and third digits select tone A and tone B from that group.

For example: The selective call code required to generate tone A = 296.5 and tone B = 1006.9 would be: 327.

NOTES:

1. 9802 Two tone sequential is an option and will not function unless factory installed.
2. Select group call or diagonal tone for multiple alerting (4.5.)
3. Tone duration: Tone A = 1sec, tone B = 3sec.
4. See 'Incoming Calls' in the Operation section to determine the proper use of the selective call codes determined from this table.

Select Tone #	1 EIA	2 ZVEI1	3 CCIR/ EEA	4 CCIT	5 EURO	6 ZVEI2
0	600	2400	1981	400	980	2400
1	741	1060	1124	697	903	1060
2	882	1160	1197	770	833	1160
3	1023	1270	1275	852	767	1270
4	1164	1400	1358	941	707	1400
5	1305	1530	1446	1209	652	1530
6	1446	1670	1540	1336	601	1670
7	1587	1830	1640	1477	554	1830
8	1728	2000	1747	1633	511	2000
9	1869	2200	1860	1800	471	2200
R	459	2600	2110	2200	1063	970

TABLE 4

5/6 TONE SEQUENTIAL CODES
(line 4.3. = 3)

Select one of the groups from the table above and enter on (5.2.)

The first two tones of a 1000 call five tone sequence are selected from the appropriate group and entered on (4.8.) and (4.9.) These two tones will automatically be sent with each page.

The third, fourth and fifth tones of the five tone sequence become the selective call code and are selected under the chosen operating group.

Example: A pager sequence of 1023, 1305, 1587, 741 and 1446 HZ is required. Enter 1 (EIA) on line 5.1. Enter 3 on line 4.8. Enter 5 on line 4.9. The three digit selective call code is then = 716.

To increase the probability of successful signalling, the five tones can be automatically repeated up to nine times (5.0.).

A sixth preamble tone can be enabled (4.6.) and selected (4.7.) if required.

The desired tone duration can also be selected (5.1.)

NOTES:
1. 5/6 tone signalling is an option and will not function unless signaling option is factory installed.
2. See 'Incoming Calls' in the Operation section to determine the proper use of the selective call codes determined from this table.

TYPICAL APPLICATIONS FOR THE AUXILIARY RELAY

(Option 9805)

Remote CTCSS Enable/Disable: When using the 9800 as a Remote Base, it is desirable to monitor the channel for activity prior to dispatching. The auxiliary relay can be used to allow the remote switching of the radio's hook switch. Pressing 0 turns the relay on. Pressing * turns the relay back off. Thus the radio can be set to carrier receive and back to DPL/CTCSS operation remotely.

Enter 1 (Monitor) on line 3.1. Connect the normally closed relay contacts (W and NC) in series with the radio's hook switch.

Disabling tone squelch: Many of the new microprocessor controlled radios will not transmit when the microphone is on hook. The auxiliary relay can be used to fool the radio into thinking the MIC is off-hook.

Enter 0 (Connect) on line 3.1. This will energize the relay whenever the 9800 is in use. Connect the normally closed contacts (W and NC) in series with the radio's hook switch.

Relay Switched PTT: If the radio's unkeyed PTT voltage exceeds 16 VDC or if inverted keying is required (closure to 12V) the auxiliary relay must be used to key the transmitter.

Enter 2 (KEY) on line 3.1. Connect the radio's PTT line to one of the Aux. Relay contacts on the rear barrier strip. Connect the other Aux. Relay contact to 12 VDC for inverted keying or to GND for sink to ground keying. Make sure JP-7 is strapped from the center to the NO position. The PTT connection on the rear barrier strip should not be connected.

Remote Relay Function: In some installations it may be desirable to remotely control (switch) something from the mobile. e.g. change channels, change CTCSS tones, change antennas etc.

Enter 3 (REMOTE FUNCTION) on line 3.1. Then select a three digit control code on line 3.2. If the code selected was 789, you would turn on the Remote Relay by sending #789. To turn off the relay send ##789.

CONNECTING THE RELAY

Connect the device requiring remote control to the two terminals labelled 'AUX. RELAY' on the rear panel barrier block. The 9800 is supplied with the relay strapped for normally open operation. if normally closed operation is desired, see JP-7 on page 9 for details.

ELECTRONIC VOICE DELAY
Option 9801

In VOX mode, word clipping or word loss is directly proportional to radio T/R speed in simplex systems and repeater pick up time when used through repeaters. The slower the system, the more desirable voice delay becomes.

The 9801 electronically delays audio originating from the telephone by .5 second. This in effect means that the transmitter has been keyed for .5 second before the audio even began! This timing makes word loss virtually impossible.

The 9801 is essential when using the 9800 through repeaters from a Control Station. It is also recommended for use in straight VOX simplex mode operation especially when connected to a slow switching base station radio.

INSTALLATION

The 9801 can be field installed in about two minutes:

1. Cut JP-1. (Adjacent to the voice delay connector)
2. Remove two 6-40 5/16 inch machine screws on either side of the voice delay connector. Remove one additional machine screw adjacent to resistor R70.
3. Place a No. 6 3/16 inch spacer over each mounting hole.
4. Drop the 9801 over the connector and down onto the spacers, component side up.
5. Install three 6-40 1/2 inch machine screws and lockwashers to secure the 9801.

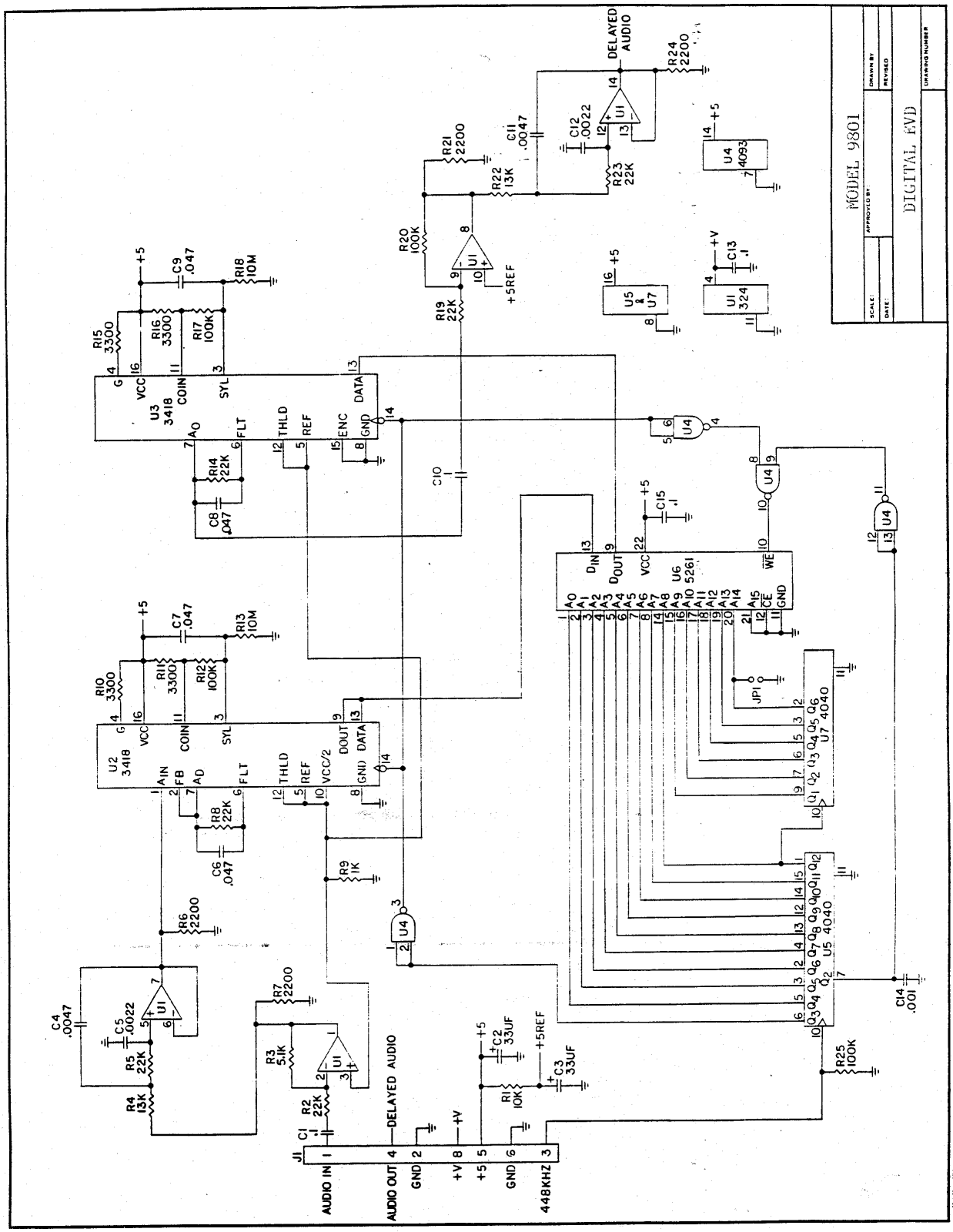
MODEL 9801
DIGITAL EVD
DELAYED AUDIO
AUDIO IN
AUDIO OUT
GND
+V
+5
448KHZ
U1 324
U2 3418
U3 3418
U4 4093
U5 4040
U6 5261
U7 4040

CTCSS BOARD (Option TSU-32P)

Sub-audible Continuous Tone Coded Squelch System (CTCSS) tones can be added to the 9800 by simply plugging in a board. This option allows the 9800 to have CTCSS operation when connected to a radio which is not equipped with a built-in CTCSS decoder.

CTCSS operation allows the 9800 to respond only to those mobiles which are encoding the correct tone frequency. Thus providing discrimination against unwanted signals. CTCSS operation can be mobile to patch only, or if desired, mobile to patch and patch back to mobile. The latter protects the mobile from having to listen to unwanted chatter while monitoring for a call.

The TSU-32P regenerates the selected CTCSS tone for the purpose of providing patch to mobile CTCSS. (Of course, the mobile must be equipped with CTCSS decode). The regenerated CTCSS tone is available on the rear panel barrier strip labelled TONE. If used, the regenerated tone must be injected directly into the transmitter's modulator through a suitable series resistor. (Try 10k-100k). Choose the largest resistor possible that will provide sufficient CTCSS tone modulation deviation. (500-750 Hz.)

CTCSS operation is compatible with VOX mode, Duplex mode, and/or Repeater mode. However, the time required for decoding low frequency tones makes CTCSS operation incompatible with the Sampling mode.

Installation: Remove the 9800 board from the chassis. Install the nine AMP type connectors into the space marked 'TSU-32P' on the board. Solder the AMP connectors from the bottom. Be sure no solder flows into the connectors. Cut jumper strap JP-4 (Just to the right of the TSU-32 mounting position). Plug the TSU-32 board into the newly installed connectors. Set the dip switches to provide the desired CTCSS tone frequency using the table below. If the regenerated CTCSS has been connected, set the CTCSS modulation to the desired level using the potentiometer on the TSU-32P. Note that the 'JU-2' option strap on the TSU-32P board must be cut. See the TSU-32P instruction sheet for details. This strap is already cut if the TSU-32P was factory installed.

DIP Switch	CTCSS Freq	Dip Switch	CTCSS Freq	Dip Switch	CTCSS Freq	Dip Switch	CTCSS Freq
12345		12345		12345		12345	
00000	67.0	00010	91.5	00001	118.8	00011	156.7
10000	71.9	10010	94.8	10001	123.0	10011	162.2
01000	74.4	01010	97.4	01001	127.3	01011	167.9
11000	77.0	11010	100.0	11001	131.8	11011	173.8
00100	79.7	00110	103.5	00101	136.5	00111	179.9
10100	82.5	10110	107.2	10101	141.3	10111	186.2
01100	85.4	01110	110.9	01101	146.2	01111	192.8
11100	88.5	11110	114.8	11101	151.4	11111	203.5

AUSTEL
(Australia Version)

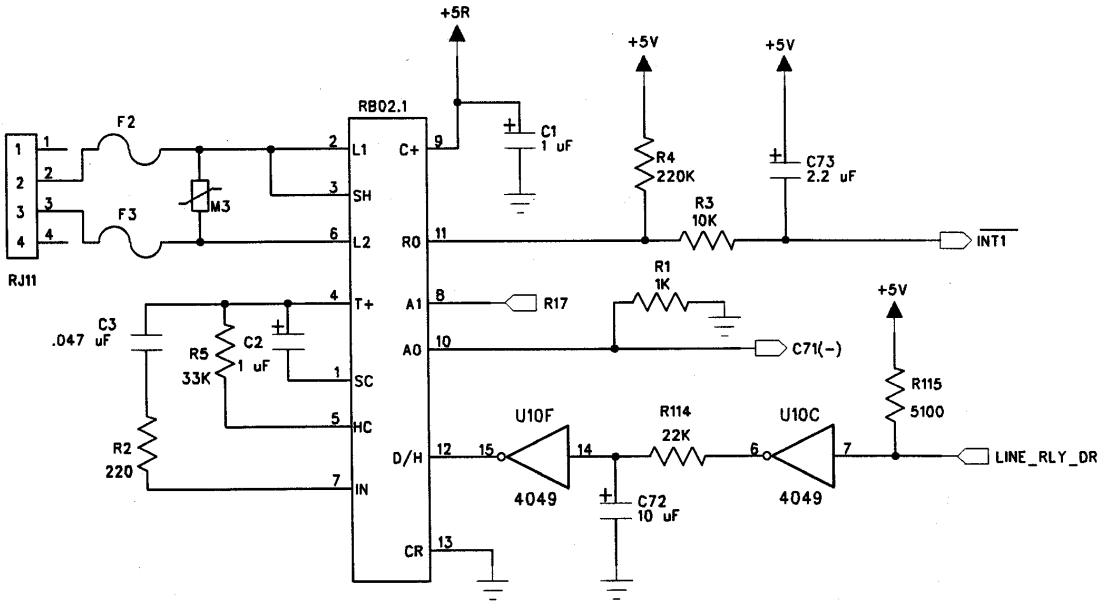

The U.S.A. / Canada version of the 9800 has been modified to conform to AUSTEL requirements.

The AUSTEL interface circuit above replaces the U.S.A. / Canada interface circuit which is surrounded with dashed lines on the 9800 schematic diagram. Below are the required component changes and deletions...

CHANGES: REF DES	9800/AUSTEL
C1	1 UF, 50V
R41	470 ohm
R1	1K
R17	470 ohm
R13, R14	18K
R7, R8, R10	100K
R60	33K
R67-73, R92	100 ohm (RN-5, RN-6)
D30	1N5245B
U6	RB02.1

DELETE: C2, C3, C7, K1, R2, R5, R6, R11, R111, R112, R113, D11, D22, D29, D30, JP10, M1, M2, T1, U15

GLOSSARY

COS	**Carrier Operated Squelch**
DCS	**Digital Coded Squelch**
CTCSS	**Continuous Tone Coded Squelch System**
JP	**Jumper (Schematic designator)**
CCW	**Counter Clockwise**
POT	**Potentiometer**
PCB	**Printed Circuit Board**
CW ID	**Continuous Wave Identification (International Morse Code)**
FCC	**Federal Communications Commission (U.S.A.)**
DOC	**Department of Communications (Canada)**
CO lines	**Central Office Lines (telephone lines from phone company)**
ANI	**Automatic Number Identification**
DTMF	**Dual Tone Multi-Frequency (touch tone dialing format)**
PTT	**Push to Talk (transmitter keying using microphone switch)**

LIMITED WARRANTY

Connect Systems Inc. (CSI) hereby warrants our products to be free from defective workmanship for a period of one year and defective parts for a period of five years from date of sale to the initial end user. This warranty applies only to the original consumer / end user purchaser of each CSI product. During the first year of warranty, CSI will repair any of its products at no charge providing the defective unit is returned prepaid to Connect Systems Inc. During years 2-5, there shall be no charge for replacement parts providing that the defective unit is shipped prepaid and service is performed by CSI. Conventional prevailing labor and shipping charges will apply following the end of the first year. CSI, at its sole discretion, will replace defective parts on an exchange basis for the first five years of ownership by the original purchaser. All shipping costs are the responsibility of the customer.

This warranty is in lieu of all other warranties, statements or representations, and unless stated herein, all such warranties, statements or representations made by any other person or firm are void. All implied warranties in connection with the sale of this equipment, including the warranty of merchantability, shall be of the same duration as the warranty period stated above. Some states do not allow limitations of how long an implied warranty lasts, so the above limitation may not apply to you. In the event of product failure which proves to be caused by a defect in workmanship or materials, your sole remedy shall be the repair of the defect by CSI or its appointed repair station as stated in this warranty, and under no circumstances shall CSI be liable for any loss or damage, direct, incidental, or consequential, arising out of the use, or inability to use, this CSI product. Some states do not allow the exclusion or limitation of incidental or consequential damages, so the above limitation or exclusion may not apply to you.

What is not covered by this limited warranty

This warranty shall not apply if, in our judgment the defects are caused by misuse, lightning strikes, customer modification, water damage, negligent use, improper installation, overloads caused by external voltage fluctuations, use of unregulated power supply, damage caused in transit or handling or any abusive treatment not in accordance with ordinary product use or the product serial number has been removed, altered or defaced. **Specific Exclusions:** This warranty specifically excludes lightning protection devices (MOVs and phone line fuses) and transistors in the PTT (Push to Talk) circuitry. These components can only fail from external abuse.

If your new CSI product should ever fail, contact Connect Systems Inc. Customer Service Dept. for repair and warranty information at (805) 642-7184 or send, freight prepaid, to...

Connect Systems Inc.
1802 Eastman Ave., Suite 116
Ventura, CA 93003

Note: Connect Systems Inc. reserves the right to render a modest service charge when returned units are found to be free of parts or workmanship defect(s) (i.e. operating to factory specifications) within the first year of

the warranty. Such units will be returned freight collect to the sender, including the appropriate service charge.

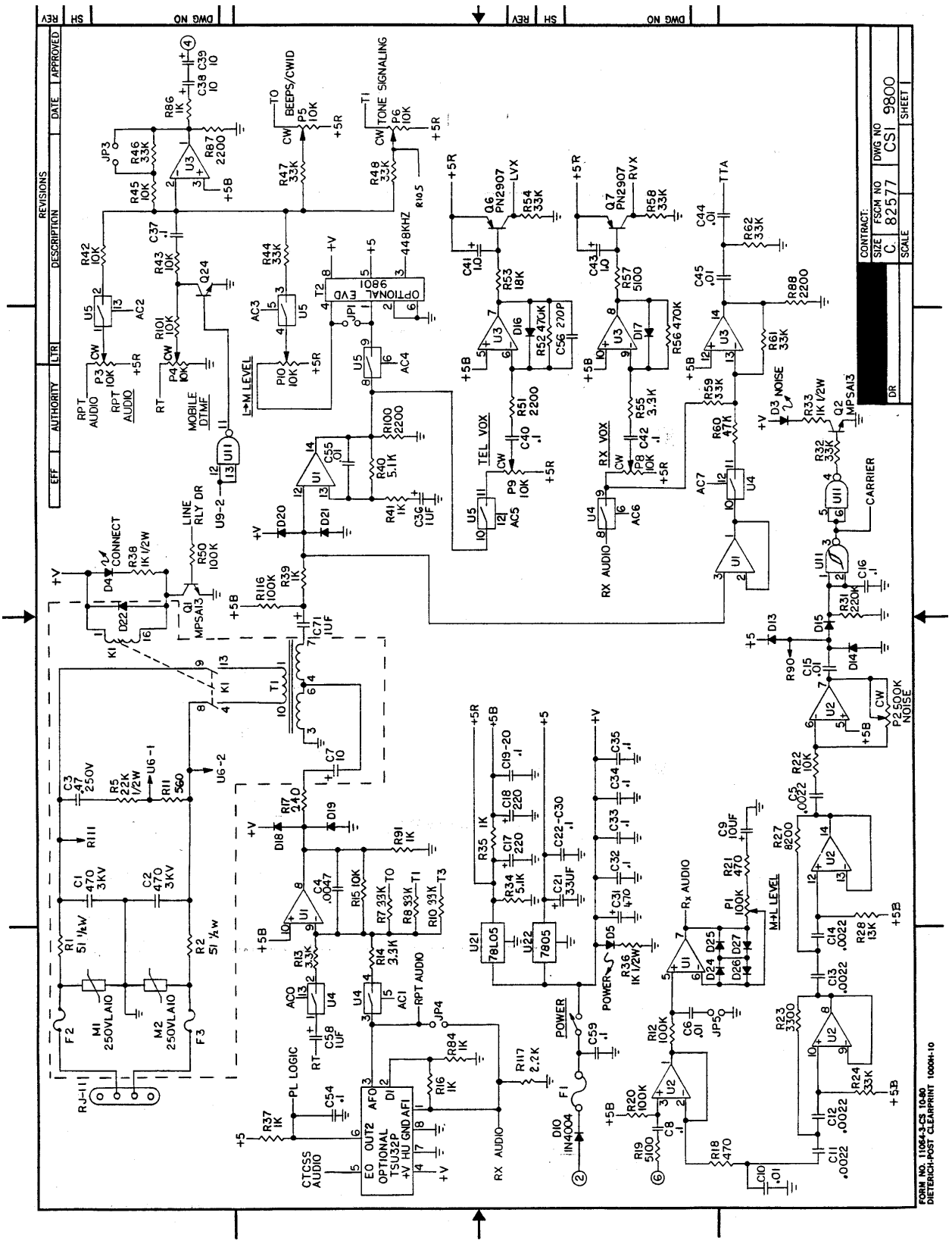
CONTRACT:
SIZE C
FSCM NO 82577
DWG NO CSI 9800
SCALE
SHEET 1
REVISIONS
EFF
AUTHORITY
LTR
DESCRIPTION
DATE
APPROVED
DWG NO
SH
REV
OPTIONAL TSU32P
OPTIONAL EVD 9801
TEL VOX
RX VOX
RX AUDIO
RPT AUDIO
MOBILE DTMF
L→M LEVEL
M→L LEVEL
CARRIER
NOISE
CONNECT
LINE RLY DR
BEEPS/CWID
TONE SIGNALING
POWER
PL LOGIC
CTCSS AUDIO
FORM NO. 11064-3-CS 10-80
DIETERICH-POST CLEARPRINT 1000H-10

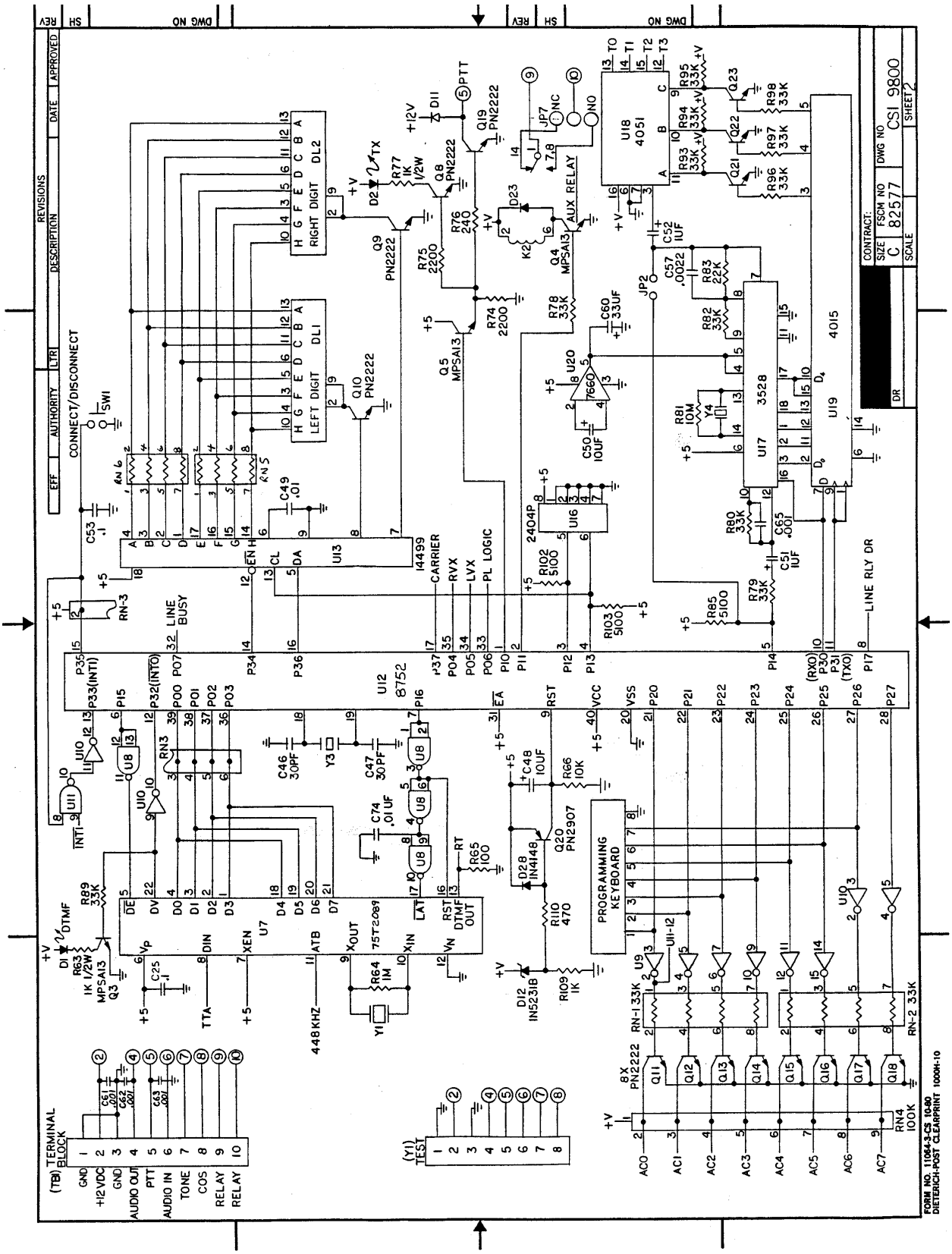
REVISIONS
EFF
AUTHORITY
LTR
DESCRIPTION
DATE
APPROVED
CONNECT/DISCONNECT
RIGHT DIGIT DL2
LEFT DIGIT DL1
U13
14499
U12
8752
U7
75T2089
U18
4051
U17
3528
U19
4015
U16
2404P
U20
7660
PROGRAMMING KEYBOARD
AUX RELAY
LINE BUSY
CARRIER
RVX
LVX
PL LOGIC
LINE RLY DR
TERMINAL BLOCK
(TB)
GND
+12VDC
GND
AUDIO OUT
PTT
AUDIO IN
TONE
COS
RELAY
RELAY
(Y1) TEST
8X PN2222
RN4 100K
AC0
AC1
AC2
AC3
AC4
AC5
AC6
AC7
CONTRACT:
SIZE C
FSCM NO 82577
DWG NO CSI 9800
SCALE
SHEET 2
FORM NO. 11064-3-CS 10-80
DIETERICH-POST CLEARPRINT 1000H-10

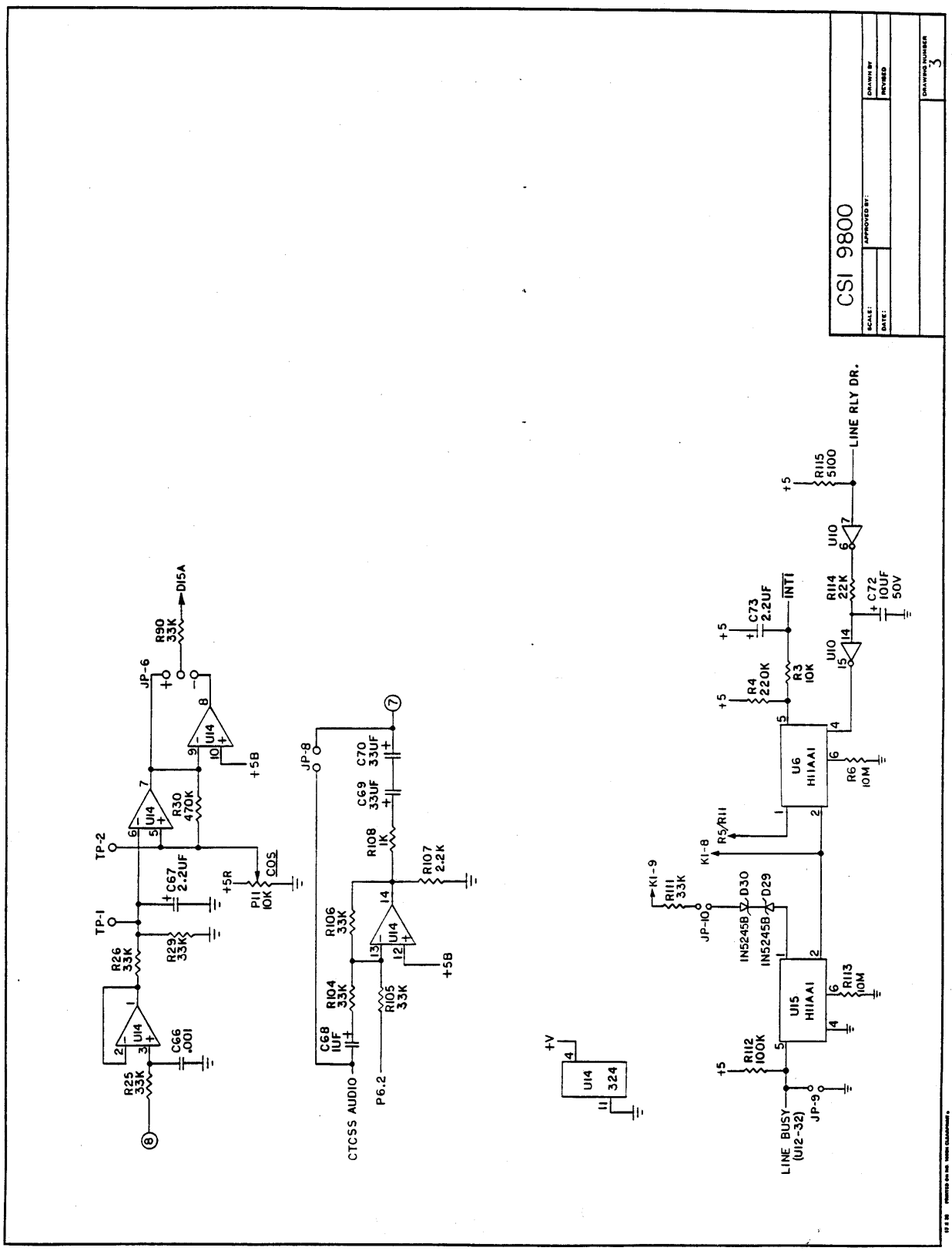
CSI 9800
SCALE:
DATE:
APPROVED BY:
DRAWN BY
REVISED
DRAWING NUMBER
3
LINE RLY DR.
R115 5100
U10
R114 22K
C72 10UF 50V
C73 2.2UF
INT1
R4 220K
R3 10K
U6 H11AA1
R6 10M
R5/R11
K1-8
K1-9
R111 33K
JP-10
D30
D29
1N5245B
U15 H11AA1
R113 10M
R112 100K
LINE BUSY (U12-32)
JP-9
U14 324
+V
CTCSS AUDIO
P6.2
C68 1UF
R104 33K
R105 33K
R106 33K
R107 2.2K
R108 1K
C69 33UF
C70 33UF
JP-8
R25 33K
C66 .001
R26 33K
R29 33K
TP-1
C67 2.2UF
TP-2
R30 470K
P11 10K
COS
+5R
JP-6
R90 33K
D15A
+5B
+5

APPENDIX A

FCC NOTICE TO USERS

1. This equipment complies with part 68 of the FCC rules. On the bottom of this equipment is a label that contains, among other information, the FCC registration number and ringer equivalence number (REN) for this equipment. If requested, this information must be provided to the telephone company.

2. The REN is used to determine the quantity of devices which may be connected to the telephone line. Excessive REN's on the telephone line may result in the device not ringing in response to an incoming call. In most, but not all areas, the sum of the REN's should not exceed five (5.0). To be certain of the number of devices that may be attached to the line, as determined by the total REN's contact the telephone company to determine the maximum REN for the area.

3. If this product causes harm to the telephone network, the telephone company will notify you in advance that temporary discontinuance of service may be required. But if advance notice isn't practical, the telephone company will notify the customer as soon as possible. Also, you will be advised of your right to file a complaint with the FCC if you believe necessary.

4. The telephone company may make changes in it's facilities, equipment, operations, or procedures that could affect the operation of the equipment. If this should happen, the telephone company will provide advance notice in order for you to make the necessary modifications in order to maintain uninterrupted service.

5. If trouble is experienced with this product, please contact Connect Systems Incorporated at (805) 642-7184 for repair and warranty information. If the trouble is causing harm to the telephone network, the telephone company may request you remove the equipment from the network until the problem is resolved.

6. There are no repairs that can be accomplished by the user. In the event of operation problems, disconnect your unit by removing the modular plug from the telephone company modular jack. If your regular telephone still works correctly, your unit has a problem and should be returned for repairs (in or out of warranty). If upon disconnection of your unit there is still a problem on your line, notify the telephone company that they have a problem and request prompt repair service. The unit may be returned to Connect Systems Incorporated, 2259 Portola Rd. Ventura, CA 93003.

7. This interconnect product cannot be used on a public coin service provided by the telephone company. Connect to Party Line Service is subject to state tariffs. Contact the state public utility commission, public service commission or corporation commission for information.

8. This device complies with part 15 of the FCC rules. Operation is subject to the following two conditions: (1) This device may not cause harmful interference, and (2) This device must accept any interference received, including interference which may cause undesirable operation.

9. This equipment generates and uses radio frequency energy and if not installed and used properly, i.e. in strict accordance with the service manual, may cause interference to radio or television reception. It has been tested and found to comply with the limits for a Class B computing device pursuant to Subpart J of Part 15 of FCC rules, which are designed to provide reasonable protection against such interference when operated in a residential installation.

10 If this equipment does cause interference to radio or television reception, which can be determined by turning the equipment off and on, the user is encouraged to try to correct the interference by one or more of the following measures:

   a. Reorient the receiving antenna.

   b. Relocate the equipment with respect to the receiver.

   c. Move the equipment away from the receiver.

   d. Plug the equipment into a different outlet so that equipment and receiver are on different branch circuits.

   e. Ensure that card mounting screws, attachment connector screws,and ground wires are tightly secured.

   f. If cables not offered by this company are used with this equipment, it is suggested that you use shielded, grounded cables with in line filters, if necessary.

   g. If necessary consult your dealer service representative for additional suggestions.

11 The manufacturer is not responsible for any radio or TV interference caused by unauthorized modifications to this equipment. It is the responsibility of the user to correct such interference.