Connect Systems Inc.
2064 Eastman Ave. Suite 113
Ventura, Ca. 93003
Phone (805) 642-7184
Fax (805) 642-7271

Private Patch V

Multi-Mode Interconnect

USER'S INSTRUCTION MANUAL

Made in U.S.A.

Copyright (C) 1988 By Connect Systems Inc.

GENERAL DESCRIPTION

The new **Private Patch V** by Connect Systems Inc. is a fully automatic Multi-Mode radiotelephone interconnect (phone patch) terminal. A built-in keyboard and digital display allow the user to obtain the maximum power from the on board microprocessor. All features are user programmable and/or selectable. Additionally, there are six modes of operation to choose from...

1. **Simplex Sampling Interconnect**
   VOX Enhanced of course.

2. **Simplex VOX Interconnect**
   For simplex, or operation through repeaters.

3. **Duplex Base Station Interconnect**
   Adds interconnect to any duplex base station.

4. **Duplex Repeater Interconnect**
   Adds interconnect to any existing repeater system.

5. **Repeater Controller with Duplex Interconnect**
   Converts any receiver and transmitter into a full featured repeater. CTCSS operation can be added as an option.

6. **Dial Access Remote Base**
   Dispatch and have full use of your radio system from any telephone. Operates with any mode selected above.

And, powerful built-in standard features such as... 9Ø number autodialer, last number redial, remote hook-flash, user programmable CW ID, remotely controllable relay, automatic disconnect on busy signals and dialtone, fully regenerated tone or pulse dialing, etc. make **Private Patch V** the most powerful interconnect product in the world!

Made and designed in the U.S.A.

INSTALLATION AND ADJUSTMENTS

EXTERNAL CONNECTION METHOD (VOX Mode Only)

When used in the VOX mode, **Private Patch V** can be connected to the external Mic and Speaker jack of any FM two-way radio. Use shielded wires with the shields at each end connected to chassis ground. (The rear panel barrier strip terminals labelled "GND" are chassis ground. The Mic return and the Speaker return pins are chassis ground on the radio end of the cables). We recommend using spade type crimp-on connectors for ease and reliability. Connect the center wires as follows:

AUDIO IN: Connect to the high side of the external speaker jack.

AUDIO OUT: Connect to the Mic high line in the microphone jack.

PTT: Connect to the PTT pin in the microphone jack.

POWER: Connect to a source of 12-14 VDC that can supply up to 300 MA. **Private Patch V** is reverse polarity protected, so a polarity mistake will not damage your unit.

Be sure to cut jumper strap JP-5 if using the external connection method. This eliminates **Private Patch V's** built-in de-emphasis network.

NOTE 1: To reiterate, the external connection method will only operate in the VOX Mode. Sampling, Duplex, and Repeater Controller modes require non de-emphasized, unsquelched audio available only from the discriminator output. The high bandwidth noise available from the discriminator allows the internal noise squelch to operate which is required for these modes.

NOTE 2: When the external connection method is used, features that require knowledge of mobile carrier cannot function. e.g. programming lines 0.5. , 1.7. and 3.3. are affected and appropriately annotated in the programming section.

INTERNAL CONNECTION METHOD

The internal connection method is preferred for all six **Private Patch V** modes. Only three connections are required to most radios. Use shielded wires with the shields at each end connected to chassis ground. (The rear panel barrier strip terminals labelled "GND" are chassis ground). We recommend using spade type crimp-on connectors for ease and reliability. Connect the center wires as follows:

AUDIO IN: Connect to the discriminator output. Be sure to connect before de-emphasis.

NOTE: On many radios, the discriminator output feeds the squelch control high side either direct or through a small coupling capacitor. Connect **Private Patch V** before the capacitor.

Note: Jumper strap JP-5 must be installed.

AUDIO OUT: Connect to the Mic high line. If Mic loading occurs install a resistor in series with the Audio Out lead, and cut JP-3. The resistor should be large enough to prevent Mic loading but small enough to achieve adequate land to mobile audio. Try 10K as a first cut.

PTT: Connect to the base station PTT line.

NOTE: Some commercial radios will need the Aux. Relay connected to the hookswitch before the transmitter can be activated. See 'Auxiliary Relay' page 22 for details.

POWER: Connect to a source of 12-14 VDC that can supply up to 300 MA. **Private Patch V** is reverse polarity protected, so a polarity mistake will not damage your unit.

ADJUSTMENTS

Initial settings:
Set P1, and P2, fully counterclockwise.
Set P3, P4, P5, P6, P9, and P10 to mid rotation.
Set P8 fully clockwise.

POT	PCB Name	Function
P1	M->L:	**Mobile to land level:** Initally adjust until mobile DTMF decodes as indicated on front panel DTMF LED. Later, adjust for proper mobile level as heard on telephone.
P2	NOISE:	**Noise (squelch) control:** Advance clockwise to a point just beyond where the front panel noise LED begins to illuminate. **NOTE:** If using the external connection method, rotate P2 fully counter-clockwise.
P3	RPT:	**Repeat audio level:** Set for correct repeat audio level if repeater controller mode is selected. (0.9.)

P4 **DTMF:** **Patch to mobile DTMF level:** Sets the DTMF transmitter modulation level of land to mobile DTMF and Semi-Duplex privacy beeps.

P5 **BEEPS/CW ID:** **Status beeps & CW ID level:** Adjust for desired modulation level of status beeps or CW ID.

P8 **RX VOX:** **Receiver VOX sensitivity:** Used in VOX mode only. Sets RX audio triggering sensitivity. Should be fully CW in VOX simplex applications. Reduce setting when used through repeaters if land line cannot respond to mobile during hangtime due to noise or tone on the repeaters' carrier.

P9 **TEL VOX:** **Telephone VOX sensitivity:** Sets telephone VOX sensitivity for VOX mode, VOX enhancement for sampling mode and call progress tone detection. Adjust to suit. Mid rotation is about right for most applications.

P1Ø **L->M** **Land to mobile level:** Press the C/D (Connect/Disconnect) switch so that a dialtone is heard. Adjust P1Ø until the dialtone produces about 3-4 Khz. of modulation deviation. Cut JP-3 if required.

JUMPER STRAP OPTIONS

JP-1 Factory Installed. Remove only if the Electronic Voice Delay (Option 98Ø1) is installed.

JP-3 Audio output range strap. Strap in = low level (Ø-1 V). Strap removed = high level (Ø-5 V). Strap factory installed.

JP-4 Factory installed. Should only be removed if CTCSS option TSU-32P is installed.

JP-5 Factory installed. Removal eliminates the built-in de-emphasis network. Must be installed if making the recommended connection to the discriminator output.

NOTE: There is no JP-2

PROGRAMMING YOUR PRIVATE PATCH V

Private Patch V has three easy-access programming areas: Operating Parameters, CW ID and Auto-Dial Phone Numbers. To enter one of the programming areas, turn the power off, press and hold the corresponding programming area button (No. 1 for Operating Parameters, No. 2 for CW ID or No. 3 for Auto-Dial Phone Numbers) and simultaneously turn on the power. The display will show **Ø.X.**, where X is the number of the programming button that is being pressed. Release the button, and programming may begin.

Each programming area has the following features in common:

1) Programming line numbers are displayed with the dots illuminated on the displays. e.g. **Ø.1.**, **2.7.** etc.

2) Data values are displayed without the dots illuminated. e.g. **ØØ**, **3Ø**, etc.

3) Data is entered at a line number by pressing the desired digits followed by the **'P'** key. Consider the **'P'** key as the enter key.

4) The GOTO **A**ny **A**ddress line is displayed as **A.A.** This line is used to branch to any line number in the current programming area. For example, the current line is **A.A.** and you wish to goto line 3Ø. Enter 3 Ø P on the keypad and the display will read **3.Ø.**

5) Pressing only **P** at the **A.A.** line will advance the line to **Ø.1.** Pressing only **P** at any other line will advance to the next available programming line.

   NOTE: In CW ID and Auto-Dial Phone Number programming, the next line will be the next numeric line number. In Operating Parameters programming the next line is not necessarily the next numeric line (see the 'Programming the Operating Mode and Parameters' section).

6) To view the programmed contents at a given line number, briefly press **'C'** on the keypad and then release it. The display will then show the data for a few seconds and then re-display the current line number. Consider 'C' the data 'see' key.

7) At any point during programming, you may return to the **A.A.** line by holding down the **C** key until **A.A.** appears on the display (approximately three seconds).

PROGRAMMING THE OPERATING MODE AND PARAMETERS

To enter the parameter programming mode, press and hold button No. 1 on the internal keypad and then simultaneously turn on the power switch. At this point, the display will read Ø.1. When you release the No. 1 button, you will see **A.A.**

A.A. (GOTO Any Address)

Press 'P' to start at line Ø.1., or enter the line number you wish to go to and then press 'P'. All line numbers and their associated parameters are listed below starting with OPERATING MODE SELECTION.

Viewing or Changing Parameter Values

A quick tap on 'C' will reveal (for a moment) the currently selected parameter of the displayed program line. If the parameter is acceptable, press 'P' to advance to the next program line, or, enter a new parameter and press 'P' to advance to the next program line.

Parameter Checking

If an out of range parameter is entered (eg. 87 on line Ø.2.) pressing 'P' will not cause an advance to the next program line. This prevents you from accidentally entering an unuseable choice.

Returning to A.A.

Programming is finished when you arrive back at A.A. If necessary, you can return to a previously programmed line by holding down 'C' for several seconds. This will return you to A.A. Now enter the line number you wish to return to and press 'P'. Line sequential programming will always flow forward from the current line.

Line numbers shown in braces e.g. [1.4.] indicates where programming will continue [Branch to] after a selection.

When you finish programming, simply turn the power off, and back on to return to the operate mode.

OPERATING MODE SELECTION **[Branch to]**

Ø.1. Operating Mode

Ø = Sampling Simplex	[Ø.2.]
1 = VOX Simplex	[Ø.5.]
2 = Duplex / Repeater Controller	[Ø.8.]

DEFAULT: Ø = Sampling Simplex

SAMPLING MODE PARAMETERS

Ø.2. Sample Width
Select 1-85 (3-255 ms)
3 ms increments per step
DEFAULT: 85 = 255 ms (milliseconds)

Select the smallest sample width compatible with your radio. Start with a large value (255 ms) and reduce a little at a time until the mobile can no longer acquire control by pressing the Mic button. From there, increase the sample width until reliable operation is obtained. The sample width in ms is equal to three times the number you enter.

Ø.3. Sample Rate
Select 1-9 (.25-2.25 seconds)
.25 sec increments per step
DEFAULT: 3 = .75 sec

Select a sample rate to suit your preference. One sample each .75 second is a good starting point. The sample rate in seconds is equal to .25 seconds times the number you enter.

Ø.4. VOX Variable Sampling Factor
Select 1-9 [1.4.]
DEFAULT: 9 = 9:1

The VOX enhancement ratio can be varied from 1 to 9. One is equivalent to no enhancement. Nine is maximum enhancement. Pick the enhancement ratio that slows the sample rate the desired amount while the telephone party is speaking.

VOX MODE PARAMETERS

Ø.5. RxVOX or Carrier Control
1 = RxVOX
Ø = Carrier
DEFAULT: 1 = RxVOX

NOTE: Must enter 1 if the external connection method is used.

Select RxVOX for use through remotely located repeaters or simplex. Select CARRIER for simplex operation only.

Ø.6. Pulser
Ø = Disable [1.4.]
Select 1-99 (.1-9.9 seconds) [1.4.]
.1 sec increments per step
DEFAULT: Ø = Disable

The pulser is normally only used for compatibility with some trunked systems such as the GE MARC V. Select Ø (disable) if not required. Otherwise select a pulse interval just shorter than the repeater hang time. The pulse interval is equal to .1 second times the number entered. A setting of 4Ø (4 seconds) is about right for the GE MARK V.

Ø.7. VOX Activity Timer Mode

1 = Standby
Ø = Disconnect
DEFAULT: 1 = Standby

Choose how the activity timer operates in VOX mode. In "Standby", landline activity exceeding the timer limit drops the patch into stand-by (off the air). Pressing * in the mobile restores normal operation. Select "Disconnect" if you prefer the patch to disconnect upon exceeding the activity limit. (The activity time is set at line 2.6.)

DUPLEX MODE PARAMETERS

Ø.8. Semi-Duplex Privacy Mode

1 = Enable
Ø = Disable
DEFAULT: Ø = Disable

In privacy mode, the mobile side of the conversation is not re-transmitted. Thus eavesdroppers only hear one half of the conversation. Thus providing a good measure of security.

Ø.9. Repeater Controller

1 = Enable [1.Ø.]
Ø = Disable [1.4.]
DEFAULT: Ø = Disable

1 - Selects Duplex Patch with Repeater controller.
Ø - Selects Duplex Patch without Repeater controller.

1.Ø. Repeater On/Off Control Code

Enter any three digits: xxx
protocol: #xxx = ON
##xxx = OFF
DEFAULT: 456

Select any three digits as an over the air repeater on/off control code. Press # plus the three digits to turn on the repeater. Press ## plus the three digits to turn off the repeater.

1.1. Repeater Mode CW ID Interval

Ø = Disable
Select 1-99 (.1-9.9 minutes)
.1 min increments per step
DEFAULT: 3Ø = 3 minutes

Choose the CW ID interval that you prefer for repeater mode. Or, disable repeater mode CW ID by pressing Ø. The CW ID interval is equal to .1 minutes times the number entered

1.2. Repeater Hang Time
Select Ø-99 (Ø-9.9 seconds)
.1 sec increments per step
DEFAULT: 3Ø = 3.Ø seconds

Selects the time in seconds that the repeater remains on the air after the input signal drops. The time is equal to .1 second times the number entered.

1.3. Repeater Activity Timer
Ø = Disable
Select 1Ø-99 (1Ø-99 seconds)
1 sec increments per step
DEFAULT: 3Ø = 3Ø secs

Any single continuous mobile transmission exceeding the repeater activity timer limit puts the repeater off the air. The activity time in seconds is equal to the number entered. Pressing Ø disables the activity timer.

GENERAL PHONE PATCH OPERATING PARAMETERS

1.4. Connect Code
Ø = * Up
x - xxxx = Multi Digit Access
Protocol: *xxxx
DEFAULT: Ø = * up

Selects the phone patch access code. Enter Ø for * up operation. Otherwise enter a one to four digit code. To access the patch press * plus the selected code.

1.5. Secret Toll Override Code
x - xxxx = Multi Digit Override
Protocol: *xxxx
DEFAULT: 1234

A separate secret code that overrides the programmed toll protection. The access code (1.4.), and the secret toll override code cannot start with the same sequence. e.g. An access code of *2 would not be compatible with a secret code of *2567. Select codes that are distinctly different. Such as access code = *56 and secret code = *3927.

NOTE: The secret Toll Override Code is inoperable if * up is selected on 1.4. At least one additional digit must be programmed.

1.6. Disconnect Code
Ø = # Down
1 = # Plus Connect Code
DEFAULT: Ø = # Down
Choose the patch disconnect code. Enter Ø to select # down in most applications. Or enter 1 to select # plus the connect code digits that were selected on line 1.4.

1.7. Five PTT Autodial
1 = Enable
Ø = Disable
DEFAULT: Ø = Disable

NOTE: Enter Ø if using the external connection method.

If enabled, five presses of the mobile Mic button (at a rate of approximately one push per second) will automatically dial the phone number stored in autodialer memory location No.1. Five subsequent presses will cause a disconnect in VOX and Duplex modes only.

1.8. Dialing Mode
1 = Tone
Ø = Pulse
DEFAULT: 1 = Tone

Select how the **Private Patch V** will dial your phone calls. Note that tone dials much faster if you are located in a touchtone telephone exchange.

1.9. Access Delay
Select 1-9 (1-9 seconds)
1 sec increments per step
DEFAULT: 2 = 2 secs

Access delay is a user selectable delay to compensate for DTMF-PTT delay built into your mobile microphone. Select a value that allows you to hear all of the CW ID and/or dialtone without clipping.

2.Ø. Manual Dialing
1 = Enable
Ø = Disable
DEFAULT: 1 = Enable

Select disable if dialing should only be allowed from the autodialer memory.

2.1. Toll Restrict Digit Counting
1 = Enable
Ø = Disable
DEFAULT: Ø = Disable

Enables/disables toll restrict digit counting. If enabled, a number exceeding ten digits cannot be dialed.

2.2. Prefix Restrict A
ØØØØ = None (display reads ' -')
x - xxxx = Multi Digit Prefix Restriction
DEFAULT: 1 = 'One' Digit Prefix Restriction (Long Distance)

2.3. Prefix Restrict B
ØØØØ = None (display reads ' -')
x - xxxx = Multi Digit Prefix Restriction
DEFAULT: Ø = 'Zero' Digit Prefix Restriction (Operator)

2.4. Prefix Restrict C

ØØØØ = None (display reads ' -')
x - xxxx = Multi Digit Prefix Restriction (e.g. 976)
DEFAULT: - = None

2.5. Prefix Restrict D

ØØØØ = None
x - xxxx = Multi Digit Prefix Restriction (e.g. 411)
DEFAULT: - = None

Lines 2.2., 2.3., 2.4., and 2.5. allow selecting any four single digit or multi-digit sequences as restricted. Four digits in sequence maximum. eg. to restrict Ø (operator), 1 (long distance), 976 and 411 enter Ø on line 2.2., enter 1 on line 2.3., enter 976 on line 2.4. and enter 411 on line 2.5.

2.6. Activity Timer

Ø = Defeat
Select 1Ø-99 (1Ø-99 seconds)
1 sec increments per step
DEFAULT: 3Ø = 3Ø secs

Enter the patch activity timer time directly in seconds or press Ø to defeat. The activity timer is reset by pressing the Mic button in sampling or duplex mode. Or by pressing * in VOX mode but only if you entered a 1 on line Ø.7.

2.7. Timeout Timer

Ø = Defeat
Select 1-99 (.5-49.5 minutes)
.5 minute increments per step
DEFAULT: 6 = 3 minutes

Select the maximum call limit time. The time is equal to .5 minutes (3Ø seconds) times the number you enter.

2.8. CW ID

1 = CW ID at connect and disconnect.
Ø = CW ID at disconnect only.
DEFAULT: Ø = At disconnect only.

After accessing, manual dialing and auto-dialing are delayed until the CW ID is finished if you enter 1.

2.9. Automatic Busy Signal Disconnect

1 = Enable
Ø = Disable
DEFAULT: 1 = Enable

3.Ø. Automatic Dialtone Disconnect

1 = Enable
Ø = Disable
DEFAULT: 1 = Enable

3.1. Aux. Relay

Ø = Connect	[3.3.]
1 = Monitor	[3.3.]
2 = Key	[3.3.]
3 = Remote Function	[3.2.]

DEFAULT: Ø = Connect

Ø. In connect mode, the relay is on whenever the patch is in connect.
1. In monitor mode, the relay can only be functioned when using Remote Base mode from a touchphone. Pressing Ø turns on the relay. Pressing * turns it back off. The relay returns to off automatically when Remote base operation is completed. This function is normally used to remotely disable CTCSS so the channel can be monitored prior to initiating dispatch from a phone.
2. In key mode, the relay is on whenever the PTT is activated.
3. Remote Function provides a remotely controllable contact closure/opening which can be used for any purpose.

NOTE: Option 9805 (Aux. Relay) is required for the above.

3.2. Remote Function Access Code

Enter any three digits; xxx
Protocol: #xxx relay ON
##xxx relay OFF
DEFAULT: 789

Sets the control code for the Aux. Relay Remote Function. Enter any three digits. To turn on the relay press #xxx. To turn off the relay press ##xxx. (If you entered 3 on line 3.1.) Note: Do not operate the remote function while in connect.

INCOMING CALLS

3.3. Busy Channel Monitor

1 = Enable
Ø = Disable
DEFAULT: Ø = Disable

NOTE: Must enter Ø if the external connection method is used.

Determines whether **Private Patch V** will ringout or auto-answer if the channel is busy (Enter Ø). Or only when the channel is clear (Enter 1).

3.4. Ringout on Ring Number

Ø = Disable	[3.8.]
Select 1-9 (1-9 ring)	[3.5.]

DEFAULT: 1 = First Ring

Selects which incoming ring starts the ringout alert. Enter 1-9 or enter Ø to disable ringout.

3.5. Ringout Alert

1 = CW ID [3.7.]
Ø = CW ID plus DTMF sequence [3.6.]
DEFAULT: 1 = CW ID

Select whether the ringout alert will consist of CW ID only, or include a DTMF sequence that can be used to activate a horn honker etc.

3.6. Ringout DTMF Sequence

Enter one to six digits; x - xxxxxx
DEFAULT: 456789

Enter a 1-6 digit DTMF sequence to be sent during the ringout alert interval. (If you entered Ø on line 3.5.)

3.7. Ringout Once or on Alternate Rings

1 = Once
Ø = Alternate
DEFAULT: 1 = Once

3.8. Auto-Answer Ring Number

Ø = Disable [A.A.]
Select 1-9 (1-9 ring) [3.9.]
DEFAULT: Ø = Disable

Selects which incoming ring initiates auto-answer. Enter 1-9 or enter Ø to disable. If auto-answer is set to a greater number of rings than ringout, you can have ordinary ringout alerts until auto-answer occurs. After auto-answer, you can initiate remote base, selective calling or talk back paging.

3.9. Telephone Remote Base

Ø = Disable [4.Ø.]
1 = Automatic on Auto-answer [4.2.]
2 = Access Code Required [4.2.]
DEFAULT: Ø = Disable

Enter Ø if remote base operation is not desired. Enter 1 if remote base operation should automatically occur after auto answer. Enter 2 if the access code selected on line 1.4. should be required from the initiating phone after the auto-answer beep.

PROGRAMMING THE CW ID

To enter the CW ID programming mode, press and hold button No. 2 on the internal keypad and then simultaneously turn on the power switch. At this point, the display will read Ø.2. When you release the No. 2 button, you will see **A.A.**

A.A. (GOTO Any Address)

Press 'P' to start at character position Ø.1., or enter the character position number you wish to go to and then press 'P'.

Viewing or Changing Character Codes

A quick tap on 'C' will reveal (for a moment) the currently selected character code for the displayed character position. If the character code is acceptable, press 'P' to advance to the next character position, or, enter a new character code and press 'P' to advance to the next character position.

Character Code Range Checking

If a number greater than 38 is entered, pressing 'P' will not cause an advance to the next character position. This prevents you from accidentally entering an unuseable choice.

Returning to A.A.

If desired, you can return to a previously programmed character position by holding down 'C' for several seconds. This will return you to A.A. Now enter the character position (line number) you wish to return to and press 'P'.

PROGRAMMING

The CW ID message sent from **Private Patch V** may consist of up to 15 characters. To program the message, enter the desired character codes (from Table 1) starting at character position **Ø.1.** thru the length of the string. If the message is less than 15 characters, it must be terminated with code 38 (Message End). For example, to program the CW ID message 'CSI':

Ø) Enter CW ID Programming Mode as explained above (Hold down key No. 2 and switch on the power)
1) From the **A.A.** line momentarily press 'P'
2) From **Ø.1.** enter: ' 2 P' for the character "C"
3) From **Ø.2.** enter: '18 P' for the character "S"
4) From **Ø.3.** enter: ' 8 P' for the character "I"
5) From **Ø.4.** enter: '38 P' to end the message.
6) Turn off the power, and then back on, to return to operate mode with the newly programmed CW ID message.

TABLE 1 CW ID CHARACTER CODES

A = 0	G = 6	M = 12	S = 18	Y = 24	5 = 30	WORD SPACE = 36
B = 1	H = 7	N = 13	T = 19	Z = 25	6 = 31	SLANT BAR = 37
C = 2	I = 8	O = 14	U = 20	1 = 26	7 = 32	MESSAGE END = 38
D = 3	J = 9	P = 15	V = 21	2 = 27	8 = 33	
E = 4	K = 10	Q = 16	W = 22	3 = 28	9 = 34	
F = 5	L = 11	R = 17	X = 23	4 = 29	0 = 35	

e.g. CW ID message desired 'CSI' enter: 2, 18, 8, **38** **(see text)**

AUTODIAL PHONE NUMBER PROGRAMMING

To enter the autodial phone number programming mode, press and hold button No. 3 on the internal keypad and then simultaneously turn on the power switch. At this point, the display will read Ø.3. When you release the No. 3 button, you will see A.A.

A.A. (GOTO Any Address)

Press 'P' to start at autodial location Ø.1., or enter the autodial location you wish to go to and then press 'P'.

Viewing or Changing Phone Numbers

A quick tap on 'C' will reveal the currently selected phone number for the displayed autodial location. The phone number is displayed digit by digit until all digits in the number have been shown. If the phone number is acceptable, press 'P' to advance to the next location, or, enter a new phone number and press 'P' to advance to the next location.

NOTE: If there is no number at the current location, pressing 'C' will flash the current location number once instead of showing a phone number.

Programming *, Pause or #

The No. 1, 2 and 3 keys on the keypad are used as dual input keys. To program a phone number which contains any of these digits, briefly press the key and continue with the number, as you would with any other digit. To program a *, press the No. 1 key until a single bar '| ' is added to the display (approx. 3 seconds) then release the key. To program a pause, press the No. 2 key until a dash ' -' is added to the display. To program a #, hold down the No. 3 key until a double bar '||' is added to the display.

NOTE: A single bar '| ' will look like the digit one ' |', except that the single bar is shifted to the left a little.

Phone Number Length Checking

A maximum of 16 digits may be entered in autodial locations 1 through 16. A maximum of 8 digits may be entered in auto-dial locations 17 through 9Ø. If too many digits are entered, the display will revert back to showing the current location number. At this point, re-enter a shorter phone number.

Returning to A.A.

If desired, you can return to a previously programmed auto-dial location by holding down 'C' for several seconds until A.A. shows on the display. Now enter the autodial location you wish to return to and press 'P'.

Returning to Operate

To return to normal operation, switch off the power and then back on. You can now use your newly programmed autodial numbers!

NOTE: The DTMF digits * and # are shown on the internal display as a '| ' and '||' respectively (same as 'p' and 'c'on the internal keypad). This is because the displays used can not display the * and # symbols.

PLACING OUTGOING CALLS

DIALING A CALL MANUALLY: From the mobile press *, then enter the access code (if any) that was selected on line 1.4. or, enter the secret toll override access code that was set on line 1.5. If the access delay on line 1.9. is properly set, you will hear dialtone or CW ID start without clipping or delay. In VOX or sampling modes wait until the dialtone drops off before you start to dial. In duplex mode you may begin dialing as soon as the dialtone has been heard.

After dialing, the next thing heard will either be ringing or a busy signal. **Private Patch V** will automatically disconnect if the number that was called is busy. (2.9. 3.Ø.).

PROGRAMMING THE AUTODIALER FROM THE MOBILE: Writing a phone number into the autodialer memory from the mobile is accomplished with a slight variation on ordinary manual dialing. Before you enter your access code, send 9 followed by the desired memory location number. e.g. You wish to place a call to 277-1463 and simultaneously add the number to autodial memory location 6. From the mobile, enter 9 6 then the access code. When the dialtone is heard, dial 277-1463 just as you would in ordinary manual dialing. You will never have to manually dial 277-1463 again!

Note: The 9 as used above means **WRITE** the phone number to be dialed into the memory location specified immediately following the 9.

You can program a *, pause or # as part of an autodial sequence if desired. The digits 1,2 and 3 are interpreted as *, pause and # if held down for 4-5 seconds during the dialing process.

For example: you wish to program; 8 pause 472-8197 into memory location No. 3. Enter in order; 9 3 then your access code. Then after dialtone enter 8, long 2, 472-8197. The number you have dialed is now properly loaded into memory location No. 3. However the long 2 will cause a misdial of the immediate call. When a *, pause or # has been used, do not let the call go through. Send the disconnect command after the number has been dialed and call back using the autodialer. The call will now dial properly.

Note: Memory locations 1-16 can store phone number sequences of up to sixteen digits. This is where you will store your long distance numbers that include area codes. Locations 17-90 are limited to eight digits and should be used for your local numbers.

PLACING A CALL WITH THE AUTODIALER: Once a phone number has been stored, calling back is a snap! Simply preceed the access code with the appropriate memory location number. Soon, your intended number will be ringing.

Example: Your access code has been set as * only. You wish to call a friend whose phone number has been previously stored in location 24. Simply enter 24 * on your mobile keypad. Another example: Your access code is *391, and you wish to autodial the number in memory location No. 7. Enter 7*391, thats all there is to it!

NOTE: If you attempt to autodial from a memory location that has not been previously loaded, **Private Patch V** returns an error message consisting of a string of eight beeps, and then returns to the stand-by condition.

LAST NUMBER REDIAL: The last phone number called is always automatically stored at autodial memory location NO. 0. To redial the last number called, simply preceed the access code (1.4.) with 0. Similar to using the autodialer. e.g. 0*, 0*391 etc.

HOOK FLASH: Private Patch V has built-in hook flash logic to operate certain phone company provided features such as call waiting. To flash, simply press * three times (***).
Note: Hook flash can cause a disconnect on some phone lines.

ACTIVITY TIMER: Once your number has been dialed, the activity timer starts operating. The activity timer behaves per selections made on program lines, 0.7. and 2.6. A warning beep is heard every two seconds during the second half of the programmed timeout interval. The beeps warn of impending timeout.

Sampling and Duplex Modes: The activity timer is constantly reset while the mobile is transmitting, and starts timing when the mobile stops transmitting. Upon hearing timeout warning beeps, a brief press of the mobile Mic button (must be long enough for acquisition in sampling mode) resets the activity timer. Failure to reset will result in a disconnect.

Note: The Vox variable sampling parameter (0.4.) is automatically set to 1 while the activity timer or the timeout timer is beeping. This results in a faster sampling rate making it easier and quicker for the mobile to reset the timer(s).

Vox Mode: The activity timer measures phone line audio activity. Phone line activity causing a single transmission exceeding the time set in 2.6. will cause one of two responses as selected on line 0.7.

1. If a "1" (stand-by) was programmed on line Ø.7. **Private Patch V** will simply go off the air, but will not disconnect your call. Pressing * will restore normal operation. (Assuming you wish to continue listening to the audio that caused the timeout).

2. If a "Ø" (disconnect) was programmed on line Ø.7. **Private Patch V** will disconnect, and the call in progress will be lost.

TIMEOUT TIMER: Calls will automatically disconnect at the end of the time you selected on line 2.7. Two quick beeps heard in succession every two seconds during the final twenty seconds warn of impending time out.

The timeout timer can be reset by the mobile by pressing *.

DISCONNECTING WHEN THROUGH: If a "Ø" was entered on line 1.6. simply press # to disconnect. If a "1" was entered, press # plus the connect digits that were selected on line 1.4.

FIVE PRESS AUTO-DIAL: If a "1" was entered on line 1.7., the phone number residing in memory location No. 1 can be automatically dialed by pressing the mobile Mic button five times in succession. When the call is finished, five more presses causes disconnect.

If you press too fast or too slow **Private Patch V** will not respond. The correct rate is about one press per second. This timing is required to keep rapid mobile fading and normal on channel Mic button pressing from falsing the patch on.

Note: Disconnecting with five presses of the Mic button operates in the Vox and Duplex modes only. (Can not operate in the sampling mode due to the mechanics of the sampling process)

INCOMING CALLS

RINGOUT: Lines 3.3. through 3.7. allow you to customize ringout for your application. Ringout is how **Private Patch V** alerts you to the presence of an incoming call.

When a call comes in, **Private Patch V** first checks to see if the channel is in use (3.3.). The incoming rings are counted (3.4). before a mobile alert is sent. The alert can consist of CW ID only, or a sequential DTMF sequence followed by CW ID (3.5.). The user programmable DTMF sequence (3.6.) can be used to operate attention getters such as a horn honker. The type of alert selected can be set to occur only once or on alternate rings (3.7.) of the incoming call.

To answer your call from the mobile, simply enter your access code (1.4.). When you complete your call, send the disconnect code (1.6).

AUTO ANSWER: Private Patch V must be set to automatically answer (3.8.) incoming calls if you wish to use the Remote Base, Selective Call or Talk Back Paging modes.

> **NOTE:** If ringout is set to occur earlier in the ring cycle (3.4.) than auto answer (3.8.), it is possible to receive ordinary incoming calls plus use the modes which require an auto answer.

TELEPHONE REMOTE BASE: You can have full use of your base station from any telephone by entering a 1 or 2 on (3.9.)...

Enter 1 if you would like to access your radio system from any phone without the need to further enter the system access code. Or, if you wish to dispatch from dial pulse phones.

Enter 2 if you would like the additional security of having to enter the system access code (1.4.) after the auto-answer beep.

You can call any mobile or portable on the channel whether they are equipped with DTMF or not.

When your call is finished, send the disconnect code (1.6.) before you hang-up. If you forget, built-in safe-guards such as call progress tone detection will keep **Private Patch V** in control. Fully automatically!

If 3.1. is set to 1 (Monitor), the Aux. Relay Option (9805) can be used to switch the base station radio from the main channel to an alternate channel, from the remote telephone. Simply press 0 for the alternate channel. Pressing * will return to the main channel. **Private Patch V** will automatically revert to the main channel if you forget to switch back. See page 22 second paragraph for connection details.

SELECTIVE CALLING: Any mobile or portable radio equipped with a DTMF tone decoder can be selectively called from any touchphone. After the auto-answer beep, enter the appropriate selective call digits followed by *.

For example: DTMF XXXXX* (X's any length, any sequence),

Private Patch V will hold the auto answered call for thirty seconds giving the mobile time to respond. To answer a call and activate two way voice capability, the mobile must send the connect code (1.4.). When the call is completed, the mobile should send the disconnect code (1.6.).

REMOTE BASE WITH SELECTIVE CALLING: To review, the Remote Base mode is accessed by entering the connect code (1.4.) after the auto-answer beep. You can then send any selective call code by entering the appropriate digits followed by *. (Voice only remote base mode 3.9. must be set to 0)

Example: You've selected *7 as your access code (1.4.) and you wish to send the selective call code 639. After the auto answer beep enter *7 639*.

OPERATION THROUGH REPEATERS
(Only possible in the VOX mode)

Operating **Private Patch V** through a repeater appears to the user as straight simplex operation. It makes no difference if the repeater is CTCSS or carrier activated. Or if the repeater has hang time. Actually, three or four seconds of hang time will improve operation because there will be fewer noises to distract the conversation.

The optional 98Ø1 electronic voice delay board is highly recommended for use through repeaters to eliminate word clipping or loss.

NOTE: See comments on setting the RX VOX control on page 4.

CALL PROGRESS TONE DETECTION

Private Patch V incorporates very sophisticated software algorithms that automatically sense the presence of dialtone and/or busy signals. The method used will function with any tone frequencies. There is nothing to adjust or maintain, it's completely automatic!

Note: On lines 2.9. and 3.Ø. you can selectively enable or disable busy signal disconnect and dialtone disconnect for special applications.

TYPICAL APPLICATIONS FOR THE AUXILIARY RELAY
(Option 9805)

Remote CTCSS Enable/Disable: When using **Private Patch V** as a Remote Base, it is desirable to monitor the channel for activity prior to initiating a call. The auxillary relay can be used to allow the remote switching of the radios' hook switch. Pressing 0 turns the relay on. Pressing * turns the relay back off. Thus the radio can be set to carrier receive and back to CTCSS operation remotely. Alternately, the relay can be used to change channels, antennas etc. from the remote telephone.

Enter 1 (Monitor) on line 3.1. Connect the normally closed relay contacts (W and NC) in series with the radios' hook switch.

Disabling tone squelch: Many of the new microprocessor controlled radios will not transmit when the microphone is on hook. The auxiliary relay can be used to fool the radio into thinking the MIC is off-hook.

Enter 0 (Connect) on line 3.1. This will energize the relay whenever **Private Patch V** is in use. Connect the normally closed contacts (W and NC) in series with the radios' hook switch.

Key System Compatability: In order to simulate a keyset phone, the A Leads (black and yellow) must be shorted whenever **Private Patch V** is in use (connected).

Enter 0 (Connect) on line 3.1. Connect the two "KEYSYS" pads (adjacent to U6) to NO and W respectively.

Relay Switched PTT: If the radios'unkeyed PTT voltage exceeds 16 VDC or if inverted keying is required (closure to 12V) the auxiliary relay must be used to key the transmitter.

Enter 2 (KEY) on line 3.1. Connect the radios' PTT line to Aux. relay W. For sink to ground keying connect N.O. to GND. For pull to 12 VDC keying connect N.O. to 12 VDC.

Remote Relay Function: In some installations it may be desireable to remotely control (switch) something from the mobile. e.g. change channels, change CTCSS tones, change antennas etc.

Enter 3 (REMOTE FUNCTION) on line 3.1. Then select a three digit control code on line 3.2. If the code selected was 789, you would turn on the Remote Relay by sending #789. To turn off the relay send ##789.

Connect the device requiring remote control to the AUX. RELAY W and N.O. or N.C. as required.

ELECTRONIC VOICE DELAY
(Option 9801)

In VOX mode, word clipping or word loss is directly proportional to radio T/R speed in simplex systems and repeater pick up time when used through repeaters. The slower the system, the more desirable voice delay becomes.

The 9801 electronically delays audio originating from the telephone by 1/2 second. This in effect means that the transmitter has been keyed for 1/2 second before the audio even began! This timing makes word loss virtually impossible.

The 9801 is essential when **Private Patch V** is used through repeaters. And recommended for use in straight VOX mode simplex operation. Especially when connected to a slow switching base station radio.

INSTALLATION

The 9801 can be field installed in about two minutes:

1. Cut JP-1. (Adjacent to the voice delay connector)
2. Remove two 6-40 5/16 inch machine screws on either side of the voice delay connector. Remove one additional machine screw adjacent to resistor R70.
3. Place a No. 6 3/16 inch spacer over each mounting hole.
4. Drop the 9801 over the connector and down onto the spacers.
5. Install three 6-40 1/2 inch machine screws and lockwashers to secure the 9801.

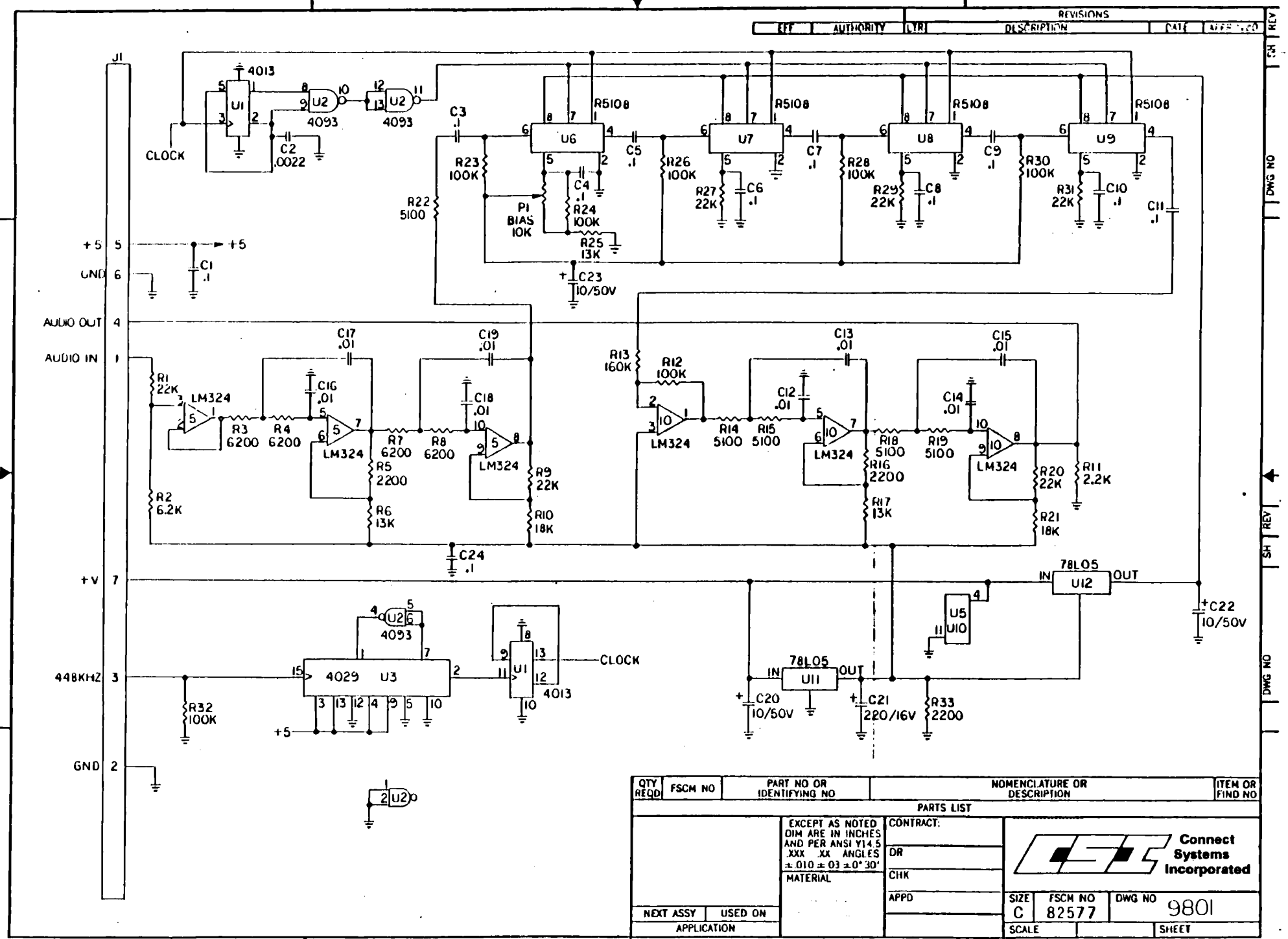

FORM NO. 11044-B-CB REV. 10-80
DIETERICH POST CLEANPRINT 1000H-10

TELEPHONE COUPLER
(Option 9806)

U.S. customers wishing to make direct connection to the public switched telephone system must use an FCC approved telephone coupler. A coupler is not required on private phone systems.

You can either use your own coupler, or we offer the popular Morey coupler. Please affix the enclosed compliance label to the rear of the interconnect if you purchased this option.

When requesting a line, the following information must be given the phone company: FCC registration AB3985-62455-PC-E
Ringer equivalence no. 0.4A,1.0B

You must notify the phone company when discontinuing use. Also, connection to coin or party lines is prohibited.

Installation: Remove **Private Patch V** PC board and solder the six position terminal block to the PC board. Connect the six leads per illustration below.

If your interconnect uses the Morey coupler, do not plug anthing into the rear panel modular phone jack. Use the phone cord which exits from the coupler.

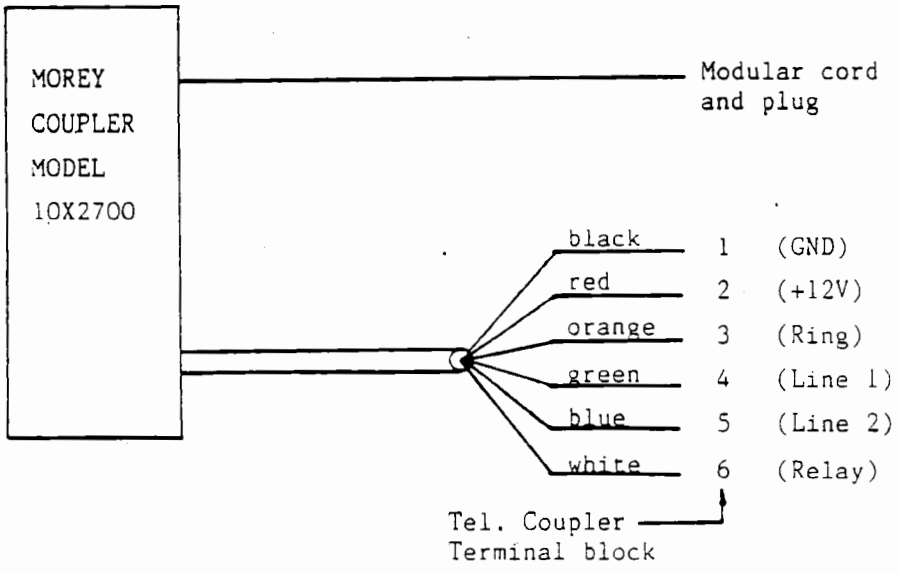

MOREY/PRIVATE PATCH V INTERFACE

CTCSS BOARD
(Option TSU-32P)

Sub-audible Continuous Tone Coded Squelch System (CTCSS) tones can be added to **Private Patch** V by simply plugging in a board.

CTCSS operation allows **Private Patch V** to respond only to those mobiles which are encoding the correct tone frequency. Thus providing discrimination against unwanted signals. CTCSS operation can be mobile to patch only, or if desired, mobile to patch and patch back to mobile. The later protects the mobile from having to listen to unwanted chatter while monitoring for a call.

The TSU-32P regenerates the selected CTCSS tone for the purpose of providing patch to mobile CTCSS. (Of course, the mobile must be equipped with CTCSS decode). The regenerated CTCSS tone is available on the rear panel barrier strip. If used, the regenerated tone must be injected directly into the transmitters' modulator through a suitable series resistor. (Try 10k-100k). Choose the largest resistor posible that will provide sufficient CTCSS tone modulation deviation. (500-750 Hz.)

CTCSS operation is compatible with VOX mode, Duplex mode, and/or repeater mode. However, the time required for decoding low frequency tones makes CTCSS operation incompatible with the sampling mode.

Installation: Remove the **Private Patch V** board from the chassis. Install the nine AMP type connectors into the space marked 'TSU-32P' on the board. Solder the AMP connectors from the bottom. Be sure no solder flows into the connectors. Cut (remove) jumper strap JP-4. Plug the TSU-32 board into the newly installed connectors. Set the dip switches to provide the desired CTCSS tone frequency using the table below. If the regenerated CTCSS has been connected, set the CTCSS modulation to the desired level using the potentiometer on the TSU-32P. Note that the 'JU-2' option strap on the TSU-32P board must be cut. See the TSU-32P instruction sheet for details. This strap is already cut if the TSU-32P was factory installed.

TSU-32P DIP-SWITCH SETTINGS

DIP-SWITCH	CTCSS Freq.	DIP-SWITCH	CTCSS Freq.	DIP-SWITCH	CTCSS Freq.	DIP-SWITCH	CTCSS Freq.
12345		12345		12345		12345	
00000	67.0	00010	91.5	00001	118.8	00011	156.7
10000	71.9	10010	94.8	10001	123.0	10011	162.2
01000	74.4	01010	97.4	01001	127.3	01011	167.9
11000	77.0	11010	100.0	11001	131.8	11011	173.8
00100	79.7	00110	103.5	00101	136.5	00111	179.9
10100	82.5	10110	107.2	10101	141.3	10111	186.2
01100	85.4	01110	110.9	01101	146.2	01111	192.8
11100	88.5	11110	114.8	11101	151.4	11111	203.5

Switch open = 1 (off) Switch closed = 0 (on)

WARRANTY

We guarantee **Private Patch V** to be free from defects in material and workmanship for one year from purchase. Tampering, misuse or modification shall void this agreement.

Several components in **Private Patch V** are mounted in sockets. We reserve the right to not cover these parts under warranty if failure is traceable to removal/re-insertion.

The quality of components used in **Private Patch V** is excellent. It should give many years of trouble-free service. Should it fail, we shall repair it at our factory, and return it to you within one day if possible.

We reserve the right to not repair units which have been "modified".

This warranty does not cover damage caused by external overloads such as lightning or power source surges. Further, the warranty does not cover damage caused by any acts of GOD.

Private Patch V utilizes two metal oxide varistors connected from phone line to ground. These "MOV's" should protect **Private Patch V** from all but the most severe lightning strikes. However, we reserve the right to not repair a unit which in our opinion is too extensively damaged. Further the warranty of a unit which has been hit by lightning is terminated. This is because of latent damage which can surface at a future date.

Should repair become necessary, please send a copy of your sales invoice together with the interconnect.

Address repairs to: **Connect Systems Inc.**
Service Department
2064 Eastman Ave. Suite 113
Ventura, Ca. 93003

FACTORY OPTIONS LIST AND PRICES

OPTION		PRICE
9801	EVD	139.00
P5-2	Coupler	105.00
P5-3	Aux Relay	7.00
P5-4	Manual de Instruccions en Espanol	5.00
TSU-32P	CTCSS Bd	75.00

To order, send check or money order for the desired options. Price includes shipping. Ca. residents add 6.5% sales tax.

Mail to: **Connect Systems Inc.**
2064 Eastman Ave. Suite 113
Ventura, Ca. 93003

NOTE: Personal checks will delay shipment 10 business days for clearance.

Please... No telephone orders for options. Thank you.

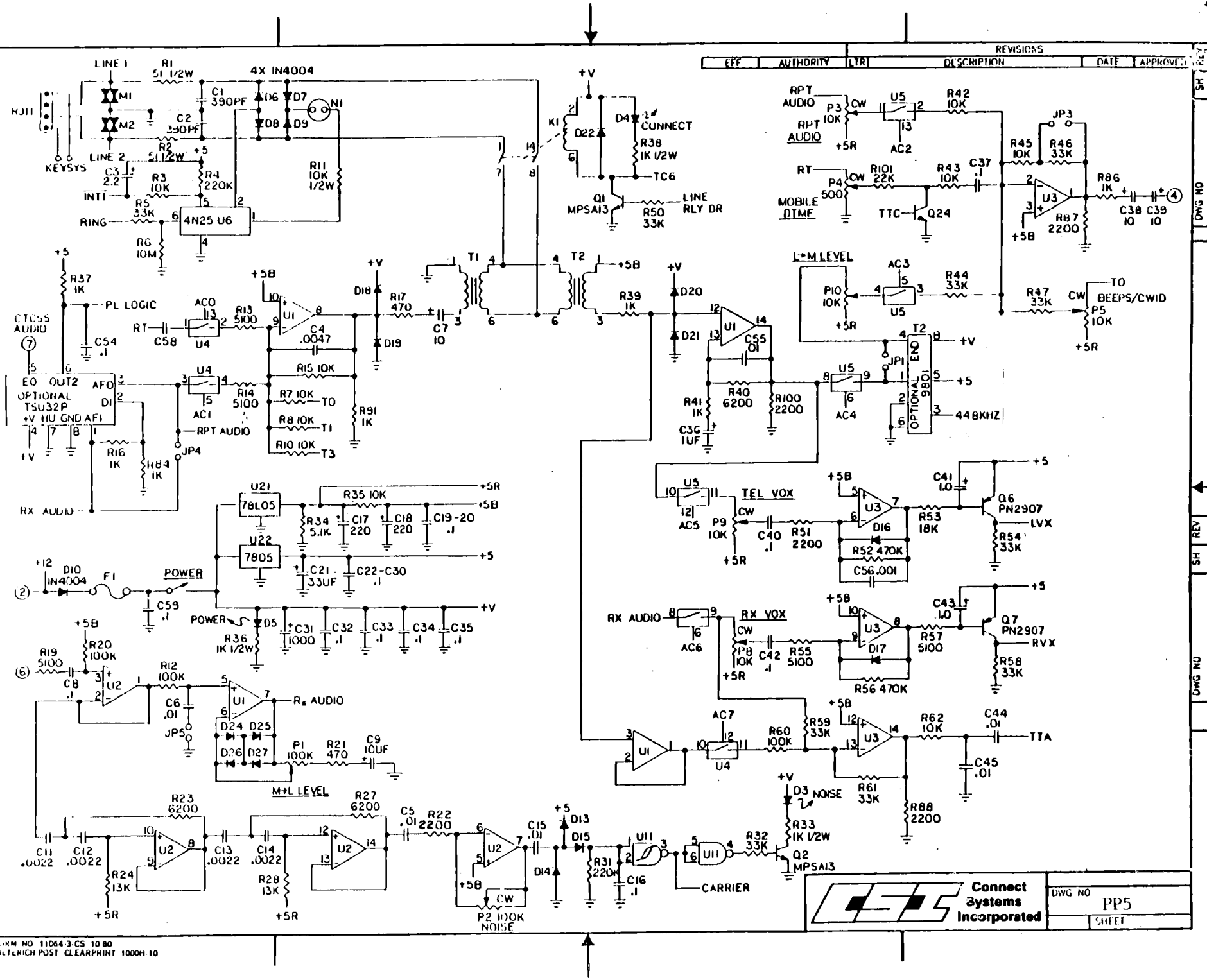

FORM NO 11064-3-CS 10 80
DIETZGEN POST CLEARPRINT 1000H-10

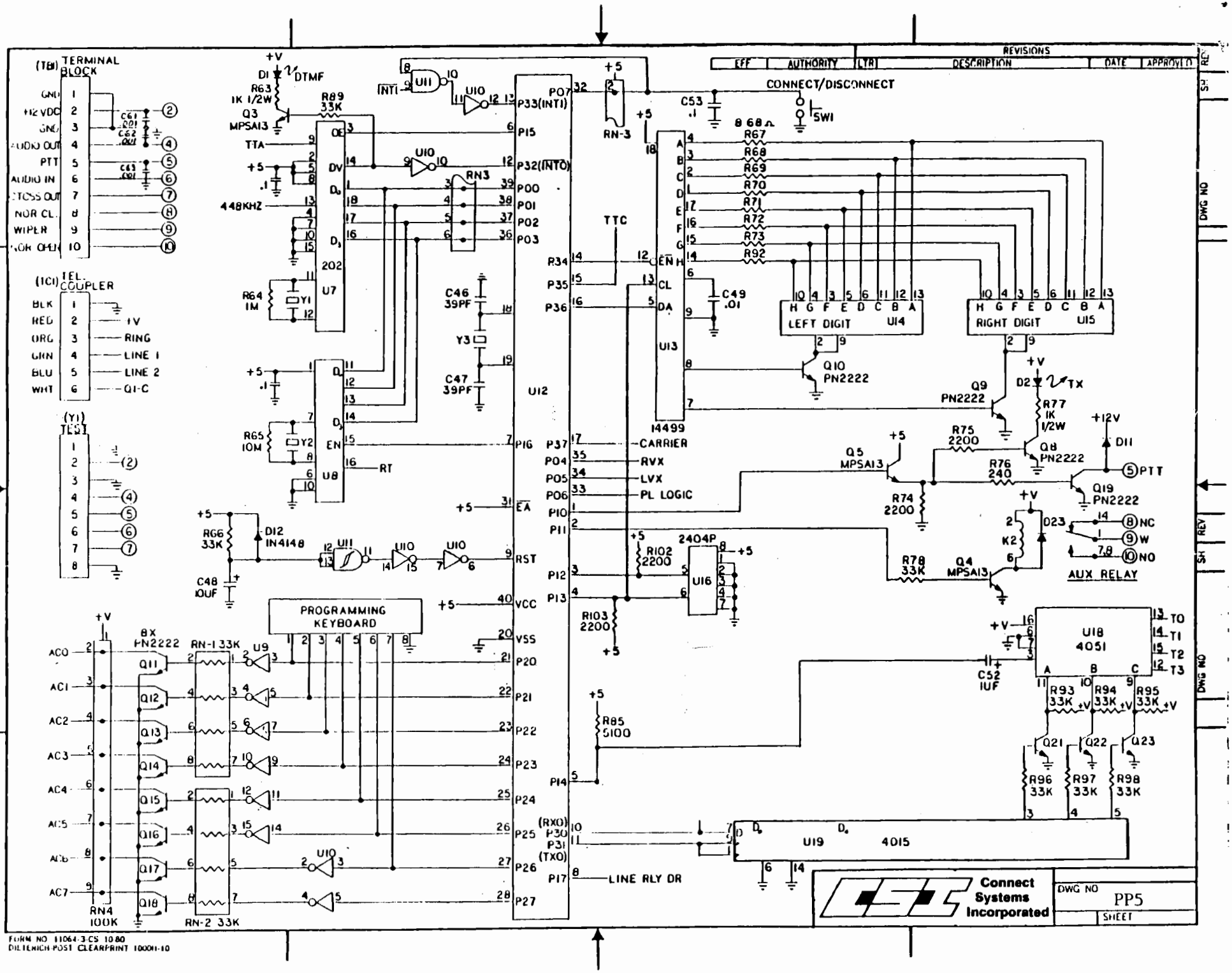

FORM NO 11064-3-CS 10-80
DIETZGEN-POST CLEARPRINT 1000H-10