MOBILE RADIO

MASTR® *Executive II*
MAINTENANCE MANUAL
MOBILE CONTROL UNIT 19C303901G3, 4 AND ACCESSORIES

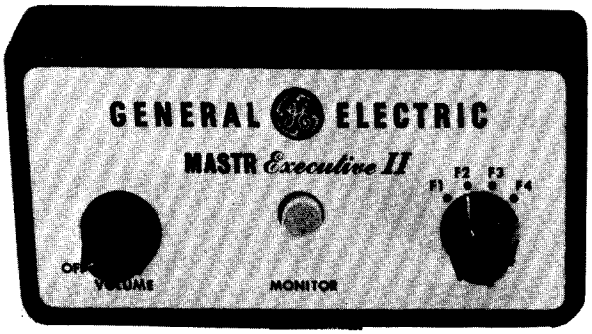

SPECIFICATIONS *

CONTROL UNIT	
1-Frequency	19C303901G3
1-Thru 4-Frequency	19C303901G4
USED WITH	MASTR Executive II Mobile Combinations
CONTROLS	OFF-VOLUME Control
	MONITOR Pushbutton
	Frequency Selector Switch (19C303901G4 only)
INDICATORS	Red Transmit Light

*These specifications are intended primarily for the use of the serviceman. Refer to the appropriate Specification Sheet for the complete specifications.

Maintenance Manual LBI30065E
DATAFILE FOLDER - DF4102

CONTROL UNIT 19C303901G3, 4

GENERAL ELECTRIC

TABLE OF CONTENTS

SPECIFICATIONS ..... Cover

DESCRIPTION 1

CIRCUIT ANALYSIS 1
- Off-Volume Control 1
- Monitor Pushbutton 1
- Multi-Frequency Switch 1
- Ignition Switch Connections 1

MAINTENANCE 1
- Disassembly 1
- Re-Installation 1

OUTLINE DIAGRAM 3

SCHEMATIC DIAGRAM 3

PARTS LIST 4
- Control Unit 4
- Power/Control Cables 4
- Fuse Assembly 4
- Microphone 4
- Microphone Hookswitch 4
- Handset 4
- Handset Hookswitch 4
- 25-50 MHz Antenna 4
- 138-512 MHz Antenna 4
- Speaker 4

POWER/CONTROL CABLE (POSITIVE GROUND) 2

WARNING

Although the highest DC voltage in MASTR Executive II Mobile Equipment is supplied by the vehicle battery, high currents may be drawn under short circuit conditions. These currents can possibly heat metal objects such as tools, rings, watchbands, etc., enough to cause burns. Be careful when working near energized circuits!

High-level RF energy in the transmitter Power Amplifier assembly can cause RF burns upon contact. Keep away from these circuits when the transmitter is energized!

Copyright © 1975, General Electric Company

DESCRIPTION

MASTR® Executive II Control Units are compact, highly functional units that are contained in a durable Lexan® housing. A back plate on the control unit contains jacks for the power/control cable connections and the speaker. The microphone screws into a jack on the bottom of the unit.

A mounting bracket is provided for mounting the Control Unit within convenient reach of the operator.

CIRCUIT ANALYSIS

The control units are equipped with an OFF-VOLUME control, a Monitor pushbutton and a red transmit light. The multi-frequency control unit is also equipped with a frequency selector switch.

OFF-VOLUME CONTROL (S701)

When the OFF-VOLUME control is in the OFF position, power is removed from the radio except for the transmitter PA. The PA supply is connected directly to the vehicle battery.

Turning S701 to the ON position applies power to the radio, and enables the push-to-talk (PTT) circuit.

Pressing the PTT switch on the microphone energizes the antenna relay, keys the transmitter, mutes the receiver and turns on the transmit indicator light. Releasing the PTT switch turns off the transmitter and transmit indicator, de-energizes the antenna relay and unmutes the receiver.

MONITOR PUSHBUTTON (S702)

Pressing in the MONITOR button disables the noise squelch circuit in the receiver. In radios equipped with Channel Guard, pressing the MONITOR button also disables the receiver Channel Guard.

MULTI-FREQUENCY SWITCH (S708)

In multi-frequency applications, the frequency selector switch is used to select the desired frequency for both transmitting and receiving. The switch connects A- to the selected transmitter and receiver oscillator modules so that the radio operates on the proper frequency.

HOOKSWITCHES (Optional)

In Channel Guard applications, an optional microphone or handset hookswitch may be supplied with the radio. Removing the microphone or handset from the hookswitch disables the Channel Guard so that the channel can be monitored before sending a message.

IGNITION SWITCH CONNECTIONS

The control unit may be connected for two different modes of operation, depending on the way the ignition switch cable is connected in the vehicle system. The black cable provides the system ground connection. The yellow fused lead provides the receiver hot connections and the transmitter Push-to-Talk hot connection. The two types of operation are:

1. Ignition Switch Control - For ignition switch control, the yellow fused lead connects to the ACCESSORY or ON terminal of the ignition switch. The transmitter and receiver will operate only when the ignition switch is in the ACCESSORY or ON position. Turning the ignition switch OFF removes all power to the radio.

> **NOTE**
>
> In certain vehicles, the alternator noise level is excessive at the ignition switch terminal. In these cases the yellow lead should be connected directly to the battery.

2. Ignition Switch Bypass - For ignition switch bypass, the yellow fused leads connect to the "hot" side of the battery. Both the transmitter and receiver operate independently of the ignition switch and are turned on and off only by the OFF-VOLUME control on the control unit.

MAINTENANCE

DISASSEMBLY

To gain access to the inside of the control unit, remove the two Phillips-head screws in the back plate and pull the plate away from the housing.

RE-INSTALLATION

If the mobile combination is ever moved to a different vehicle, always check the battery polarity of the new system. If necessary, install the optional polarity converter in positive ground vehicles to maintain current polarity.

GENERAL ELECTRIC COMPANY • MOBILE COMMUNICATIONS DIVISION
WORLD HEADQUARTERS • LYNCHBURG, VIRGINIA 24502 U.S.A.

GENERAL ELECTRIC
U.S.A.

* Trademark of General Electric Company U.S.A.
Printed in U.S.A.

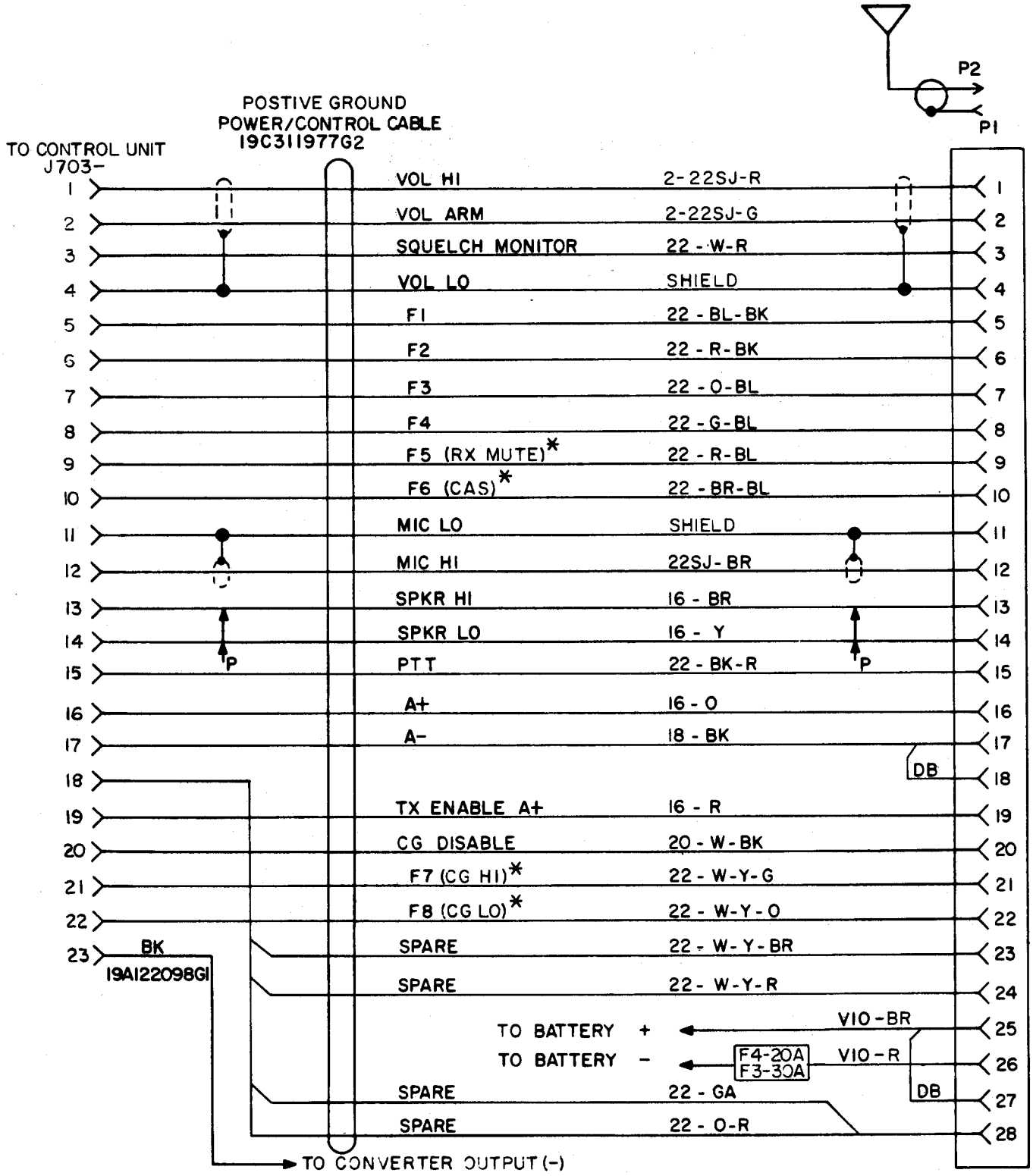

NOTES:

1. * ALTERNATE FUNCTION WHEN THIS CABLE IS USED FOR + GND APPLICATIONS ON THE SINGLE OR FOUR FREQUENCY EXECUTIVE II MOBILE.

POWER / CONTROL CABLE

19C311977G2 (POSITIVE GROUND) (19C327762, Rev. 0)

PARTS LIST

LBI30071E

MASTR EXECUTIVE II CONTROL UNIT
AND
ASSOCIATED ASSEMBLIES

SYMBOL	GE PART NO.	DESCRIPTION
		CONTROL UNIT 19C303901G3 (1 FREQ) 19C303901G4 (1-4 FREQ)
		- - - - - - - - INDICATING DEVICES - - - - - - - -
ds701	19C307037P14	Lamp, incandescent: 18 v; sim to GE 1445.
		- - - - - - - - - - - - FUSES - - - - - - - - - - -
F703	1B16P6	Quick blowing: 3 amps at 250 v; sim to Littelfuse 312003 or Bussmann AGC-3.
		- - - - - - - JACKS AND RECEPTACLES - - - - - - -
J701		Connector. Includes:
	19A116061P2	Receptacle: 4 female contacts; sim to Amphenol Type 91-PC4F-1000.
	19A116061P4	Lockwasher: internal tooth.
	19A116061P5	Nut, knurled.
	19A116049P1	Solderless terminal.
J702	5493018P1	Connector: 5 contact, molded black phenolic, steel mounting saddle; sim to Cinch Mfg Co 203-41-03-081.
J703	19A122095G1	Board: 27 contacts.
		- - - - - - - - - - RESISTORS - - - - - - - - - -
R701		(Part of S701).
		- - - - - - - - - - SWITCHES - - - - - - - - - -
S701	5496870P13	Resistor/switch: includes Resistor (R701), variable, carbon film, 5000 ohms ±20%, 0.5 w; Switch, rotary, DPST, 6 amps at 125 VAC; sim to Mallory LC1(SC)OAC-2.
S702	19B209165P4	Pushbutton, white: SPST, momentary contact, normally open, 1 amp at 115 VAC; sim to Grayhill 30-1T8.
S708	19B200394P8	Rotary: 1 pole, 4 positions, non-shorting, 36° indexing contacts, 1 amp at 115 VAC or 28 VDC; sim to Grayhill Series 24.
		- - - - - - - - - - TERMINAL BOARDS - - - - - - - - -
TB1	7775500P4	Phen: 2 terminals.
		- - - - - - - - - - - - SOCKETS - - - - - - - - - -
XDS701	4032220P1	Lampholder, miniature: sim to Drake N517.
XF703		FUSE LEAD 19A122113G2
		- - - - - - - - - - MISCELLANEOUS - - - - - - - - -
	19A115776P5	Knob assembly; sim to Bussman 9953 1/2- mates with 19A115776P6. (Short section).
	19A115776P3	Fuseholder, phenolic: sim to Bussman 9835- mates with knob. (Long section).
	19A115776P3	Contact, electric: sim to Littelfuse Co. 904-88. (Quantity 2).
	19A115776P7	Spring.

*COMPONENTS ADDED, DELETED OR CHANGED BY PRODUCTION CHANGES

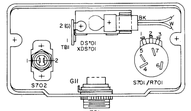

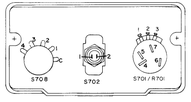

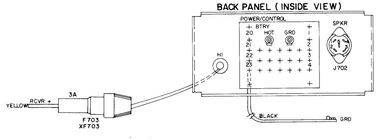

(19C327089, Rev. 1)

NOTES:

1. S708 IN 19C303901G4 ONLY.
2. REMOVE DA JUMPER S708-2 TO S708-3 FOR 3 FREQ. OPERATION. REMOVE DA JUMPER S708-2 TO S708-3 AND S708-3 TO S708-4 FOR 4 FREQ. OPERATION.
3. ✱ WIRES PRESENT IN 19C303910G3,G4 ONLY.
4. ▲ WIRES PRESENT IN 19C303901G4 ONLY.
5. ● WIRES PRESENT IN INSTALLATION OF TONE JACK 19A127270G5.
6. ■ WITH TONE JACK 19A127270G5 ADD R706 AND REMOVE DA JUMPER BETWEEN TB1-1 AND R701-1. REMOVE V18-V WIRE FROM J702-1 TO J701-4 FOR DECODER APPLICATIONS ONLY.
7. ●● F4 - 35 TO 66 WATT EXEC II
   F3 - 66 TO 128 WATT EXEC II

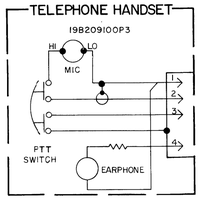

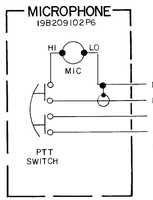

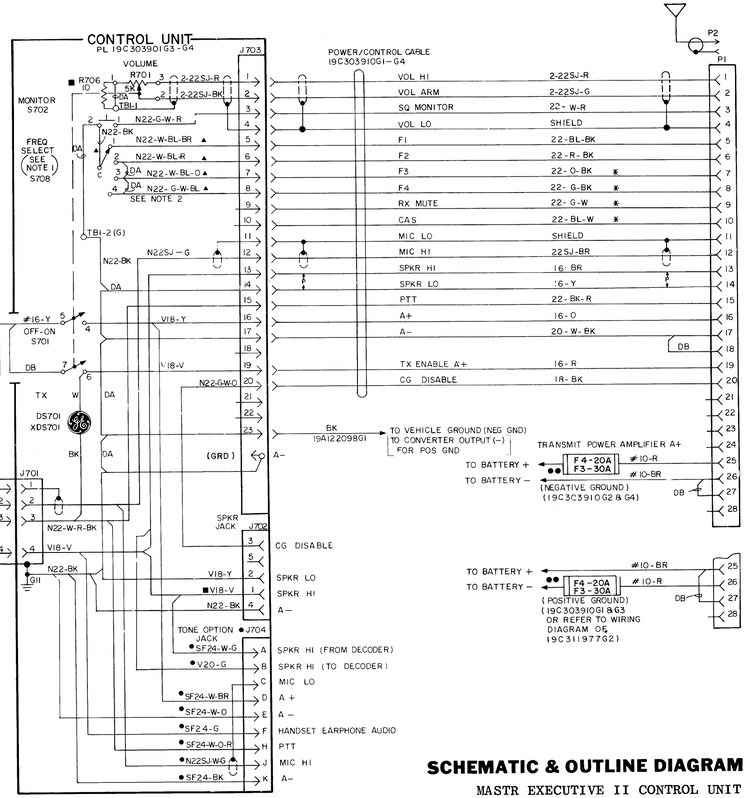

(19D423454, Rev. 4)

SEE APPLICABLE PRODUCTION CHANGE SHEETS IN INSTRUCTION BOOK SECTION DEALING WITH THIS UNIT, FOR DESCRIPTION OF CHANGES UNDER EACH REVISION LETTER.

THIS ELEM DIAG APPLIES TO

MODEL NO	REV LETTER
PL19C303901G3	
PL19C303901G4	

IN ORDER TO RETAIN RATED EQUIPMENT PERFORMANCE, REPLACEMENT OF ANY SERVICE PART SHOULD BE MADE ONLY WITH A COMPONENT HAVING THE SPECIFICATIONS SHOWN ON THE PARTS LIST FOR THAT PART.

ALL RESISTORS ARE 1/2 WATT UNLESS OTHERWISE SPECIFIED AND RESISTOR VALUES IN OHMS UNLESS FOLLOWED BY K=1000 OHMS OR MEG = 1,000,000 OHMS. CAPACITOR VALUES IN PICOFARADS (EQUAL TO MICROMICROFARADS) UNLESS FOLLOWED BY UF= MICROFARADS. INDUCTANCE VALUES IN MICROHENRYS UNLESS FOLLOWED BY MH= MILLIHENRYS OR H=HENRYS.

SCHEMATIC & OUTLINE DIAGRAM

MASTR EXECUTIVE II CONTROL UNIT

SYMBOL	GE PART NO.	DESCRIPTION
		HARNESS ASSEMBLY 19C303901G5 (1 FREQ) (Includes J701-J703, R701, S701, XDS701)
		HARNESS ASSEMBLY 19C303901G6 (1-4 FREQ) (Includes J701-J703, R701, S701, S708, XDS701)
		TONE JACK KIT 19A127270G5
		- - - - - - - JACKS AND RECEPTACLES - - - - - - -
J704	19B216279G1	Jack: 9 female contacts rated at 5 amps at 900 WERS; sim to Winchester MRS-LRX.
		- - - - - - - - - - RESISTORS - - - - - - - - -
R706	19A700113P15	Composition: 10 ohms ±5%, 1/2 w.
		- - - - - - - - - - MISCELLANEOUS - - - - - - - -
	19B200394P5	Washer. (Used with S708).
	54904074	Grommet, rubber. (Located in mounting plate).
	19B205216P1	Jewel: red. (Used with DS701).
	19A115495P1	Screw, hexhead: No. 1/4-20 x 5/8. (Secures housing to mounting bracket).
	7115195P2	Hex nut: No. 15/32-32. (Used with S702).
	7115130P11	Lockwasher: No. 15/32; sim to Shakeproof 1222-1. (Used with S702).
	7165075P2	Hex nut, brass: No. 3/8-32. (Used with S701 & S708).
	7115130P9	Lockwasher: No. 3/8; sim to Shakeproof 1220-2. (Used with S701 & S708).
	19A129617G1	Support. (Used with DS701).
	N143P1306C6	Tap screw: No. 6-20 x 3/8. (Secures TB1).
	N190P1305C13	Screw: No. 6-32 x 5/8. (Secures XDS701).
	19B209209P208	Tap screw, Phillips Pozidriv: No. 4-40 x 1/2. (Secures S702).
	19A116773P106	Tap screw, Phillips POZIDRIV®: No. 7-19 x 3/8. (Secures backplate).
	N927P965	Nameplate. (1 FREQ).
	N927P964	Nameplate. (1-4 FREQ).
	403918Z64	Knob. (Used with S701 & S708).
	19D413010P3	Housing.
	19A121521G2	Mounting support.
	19B205347P2	Mounting plate.
		ASSOCIATED ASSEMBLIES
		MICROPHONE 19B209102P6 (SEE MC-1163)
1		Cable clamp. Shure Brothers 53A532.
2		Switch. Shure Brothers RP26.
3		Case (back) and mounting button: plastic. Shure Brothers RP100.
4		Switch button: red plastic. Shure Brothers RP25.
5		Spring and internal hardware. Shure Brothers RP16.
6		Shield. Shure Brothers RP23. (Quantity 5).
7		Magnetic controlled cartridge, grille cloth, screen and resonator. Shure Brothers RP13.
8		Case (front): plastic. Shure Brothers RP100.
9		Cable and plug: approx 6 feet long. Shure Brothers RP14.

SYMBOL	GE PART NO.	DESCRIPTION
		HANDSET 19B209100P3 (SEE MC1398)
1		Self tap screw, bind head: No. 4 x 5/16. Shure Brothers 30C640C.
2		Cable clamp. Shure Brothers 53A532.
3		Shield. Shure Brothers RP19.
4		Switch. Shure Brothers RP61.
5		Case. Shure Brothers 21RP899F. (Used in 4EM26C10).
6		Adapter. Shure Brothers 65A230.
7		Magnetic controled cartridge. Shure Brothers RP41.
8	3R779222K	Resistor, composition: 2.2K ohms ±10%, 1/2 w.
9		Receiver cap. (Part of item 5).
10		Washer. Shure Brothers 34A321.
11		Escutcheon. Shure Brothers 53A536A.
12		Actuator. Shure Brothers 53A556.
13		Spring. Shure Brothers 44A140.
14		Plunger bar. Shure Brothers RP82.
15		Flat head screw, socket cap: No. 4-40 x 1/4. Shure Brothers 30C557B.
16		Transmitter cap. (Part of item 5).
17		Washer. Shure Brothers 34A309.
18		Magnetic controled cartridge, Transmitter. Shure Brothers RP13.
19		Cable & plug. Shure Brothers 21RP738F.
		HOOKSWITCH 19B204867G4 (SEE RC1398)
20	4029851P5	Cable clamp; sim to Keckesser 2/16-4.
21	19A121612P1	Holder and switch: thermoplastic case, contact rating 1 amp at 125 v.
22	19B205661G1	Cable: approx 24 inches long, includes 5493018P5 (J1) and 5493018P2 (P1).
23	5493035P10	Resistor, wirewound, ceramic: 3.5 ohms ±5%, 5 w; sim to Hamilton Hall Type HR.
24	7775500P55	Terminal board, phen: 5 terminals.
		MICROPHONE HOOKSWITCH 19C303571G3
		- - - - - - - - - - SWITCHES - - - - - - - - - -
S1	19B209099P1	Sensitive: SPDT, 10.1 amps at 125 VAC, 1/4 hp; sim to Cherry Electrical Products Corp. E62-11AB.
		- - - - - - - - - - - - CABLES - - - - - - - - - - -
W1		CABLE ASSEMBLY 19B205895G1
		- - - - - - - JACKS AND RECEPTACLES - - - - - - -
J1	5493018P5	Connector: 5 contact, molded black phenolic; sim to Cinch Mfg. Co. 203-31-05-031.
		- - - - - - - - - - - - PLUGS - - - - - - - - - - -
P1	5493018P2	Connector, plug: sim to Cinch 204-31-05-010.
		SPEAKER 19C320302G5
		- - - - - - - - - LOUDSPEAKERS - - - - - - - - -
LS2	19A116910P1	Permanent magnet: 5 inch, 3.2 ohms ±15% imp, 5 w max operating; sim to Pioneer 002009.

SYMBOL	GE PART NO.	DESCRIPTION
		- - - - - - - - - - - - CABLES - - - - - - - - - - -
W2		CABLE 19A122167G1
		- - - - - - - - - - - - PLUGS - - - - - - - - - - -
P702	5493018P2	Connector, phenolic: 5 contacts; sim to Cinch 204-31-05-010.
	5491563P4	Plug cap.
		- - - - - - - - - MISCELLANEOUS - - - - - - - - -
	19A116986P108	Screw, thd. forming, assembled washer: Phillips Pozidriv®, M1-40® thd. No. 7-19 x 1/2. (Mount speaker).
	19A116986P112	Screw, thd. forming, assembled washer: Phillips Pozidriv®, M1-40® thd. No. 7-19 x 3/4. (Housing to grille).
	N130P1710C13	Tap screw: No. 10-12 x 5/8. (Secures housing to wall).
	N187P6010C6	Machine screw, slotted, Hex/washerhead: No. 10-32 x 5/8. (Mounts bracket to housing).
	19C320016P1	Mounting bracket.
	19B227593G1	Housing.
	19B219692G1	Grille.
		POWER/CONTROL CABLE 19C303910G1 2 FREQ POS GRD 19C303910G2 2 FREQ NEG GRD 19C303910G3 4 FREQ POS GRD 19C303910G4 4 FREQ NEG GRD
	19C303910G5	Connector assembly.
	19D413039P1	Cover. (Nut side).
	19D413039P2	Cover. (Screw side).
	N33P9020C6	Machine screw: No. 4-40 x 1-1/4. (Quantity 3).
	N21099C6	Hex nut: No. 4-40. (Quantity 3).
	19C311411G1	Screw, knurled.
	19A115959P1	Cable: brown, approx 5 feet long.
	19A115959P2	Cable: red, approx 26 feet long.
	7139880P8	Cable: 13 conductors, approx 18 feet long.
	7139880P9	Cable: 17 conductors, approx 18 feet long.
		POWER/CONTROL CABLE POSITIVE GROUND 19C311977G2
	19C311409P1	Receptacle.
	19B226473G1	Cover.
	N33P9020C6	Machine screw: No. 4-40 x 1-1/4. (Quantity 3).
	N21099C6	Hex nut: No. 4-40. (Quantity 3).
	19C311411G1	Screw, knurled.
	7142878G1	Clip loop.
	4029840P1	Contact, electrical; sim to AMP 41854. (Quantity 14).
	4029840P3	Contact, electrical; sim to AMP P-53007. (Quantity 6).
	7139880P11	Cable: 23 conductors, approx 18 feet long.
	19A115959P1	Cable: brown, approx 5 feet long.
	19A115959P2	Cable: red, approx 24 feet long.

SYMBOL	GE PART NO.	DESCRIPTION
		25 - 50 MHz ANTENNA
	749107 4P1	Antenna: includes stainless steel rod approx 98-1/2 inches long; ball tip; lockwasher; No. 10-32 hex socket set screw; sim to Antenna Specialists ASPA38GE.
	7102930P3	Adapter, antenna: approx 2-5/16 inches long. (Used with GE Dwg 749107 4P1).
	4KY9A1	Loading coil: 25-33 MHz; sim to Antenna Specialists ASPA87.
	19A121577G1	Antenna hook kit.
	7134724P1	Antenna hook.
	19C307172P1	Antenna Package: Includes base & ball assembly, adapter spring assembly, cable assembly, horseshoe plate, & rubber gasket.
		Base and ball assembly. Newtronics 5495.
		Adapter spring assembly. Newtronics 3327.
		Cable assembly. Newtronics 183-4A0.
		Horseshoe plate. Newtronics 3323-3.
		Rubber gasket. Newtronics 3320.
		138-512 MHz ANTENNA 19B209568P1
		Whip assembly. 068110-001.
		Whip nut assembly. 068047-001.
		Base nut assembly. 068048-001.
		"O" Ring (LARGE). 007059-122.
		Stud assembly. 068046-001.
		RG58/U Cable, 15 feet. 068115-031.
		66-88 MHz ANTENNA 19C320111P3
	19C320111G1	Antenna base: 15 ft. cable with M28220P1 connector with 7105381P1 adaptor; sim to Decibel Products DB719.
	19C320111G2	Antenna whip and Spring base: sim to Decibel Products DB670A.
		800-870 MHz ANTENNA 19B209568P4
		Whip assembly. 068110-001.
		Whip nut assembly. 068047-001.
		Base nut assembly. 068048-001.
		"O" Ring (LARGE). 007059-122.
		Stud assembly. 068046-001.
	19B209018P5	Plug, Type N. sim to UG536B/U.
		Cable. (Included as part of complete antenna assembly only).
		FUSE ASSEMBLY 19B216021G4 (Fuses must be ordered separately)
		- - - - - - - - - - - FUSES - - - - - - - - - - -
F3	1R11P7	Quick blowing: 30 amps, 250 v; sim to Bussmann NON30. (Used with 66-128 w EXECUTIVE II Mobiles).
F4	1R11P5	Quick blowing: 20 amps, 250 v; sim to Bussmann NON20. (Used with 35-66 w EXECUTIVE II Mobiles).

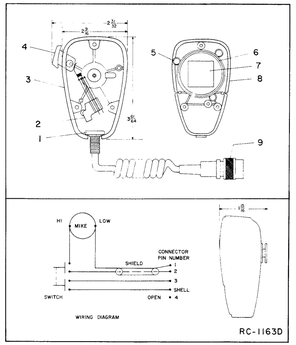

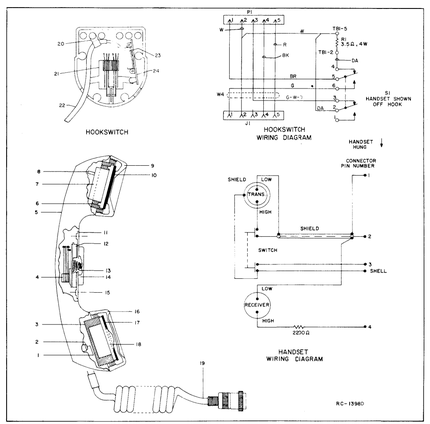

MICROPHONE HOOKSWITCH

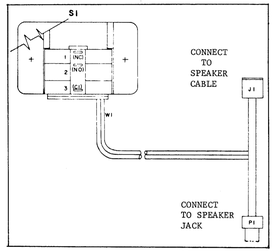

(19B219748, Rev. 0)

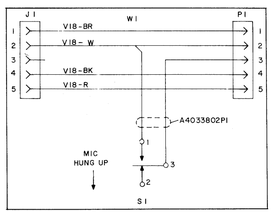

(19A122640, Rev. 2)