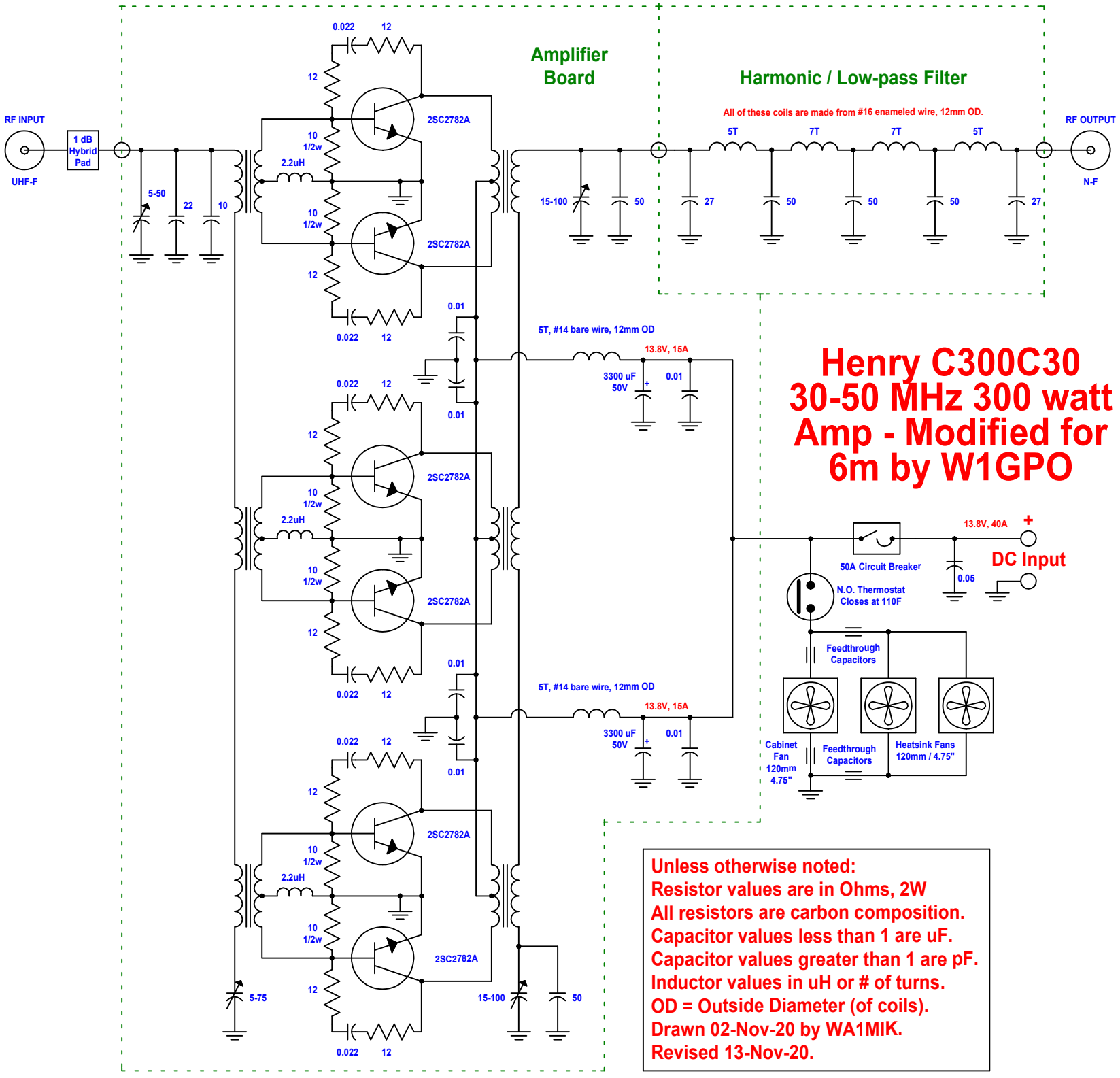
Amplifier Board
Harmonic / Low-pass Filter
All of these coils are made from #16 enameled wire, 12mm OD.
RF INPUT
UHF-F
1 dB Hybrid Pad
RF OUTPUT
N-F
2SC2782A
5T, #14 bare wire, 12mm OD
13.8V, 15A
3300 uF 50V
13.8V, 40A
DC Input
50A Circuit Breaker
N.O. Thermostat Closes at 110F
Feedthrough Capacitors
Cabinet Fan 120mm 4.75"
Heatsink Fans 120mm / 4.75"
Henry C300C30 30-50 MHz 300 watt Amp - Modified for 6m by W1GPO
Unless otherwise noted:
Resistor values are in Ohms, 2W
All resistors are carbon composition.
Capacitor values less than 1 are uF.
Capacitor values greater than 1 are pF.
Inductor values in uH or # of turns.
OD = Outside Diameter (of coils).
Drawn 02-Nov-20 by WA1MIK.
Revised 13-Nov-20.