REMOTE KIT / DUAL CONTROL HEAD KIT / DUAL BAND REMOTE KIT

KRK-2/3DH/4DB

SERVICE MANUAL

KENWOOD

© 1992-1 PRINTED IN JAPAN
B51-8154-00 (O) 1157

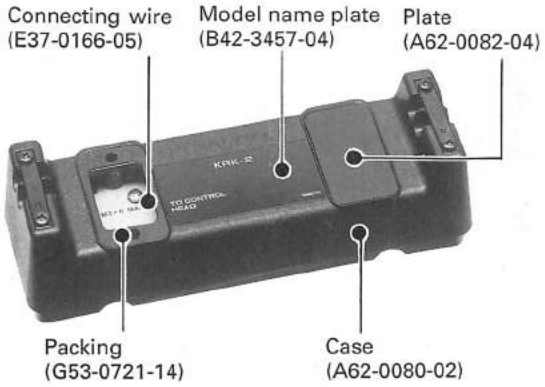

Photo is KRK-2.

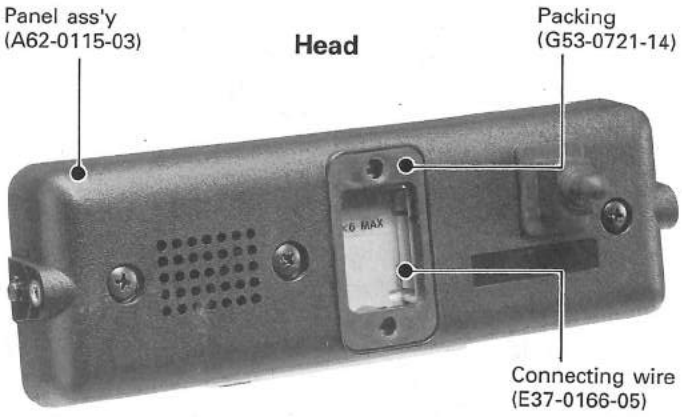

Install the head on the display unit

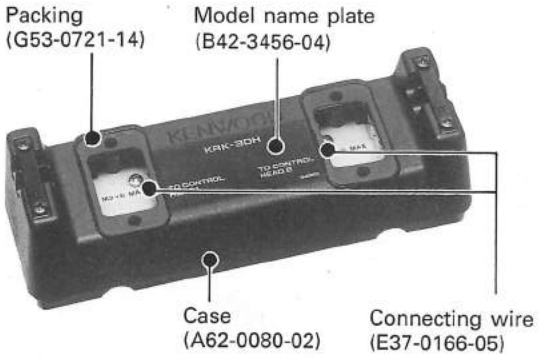

Photo is KRK-3DH.

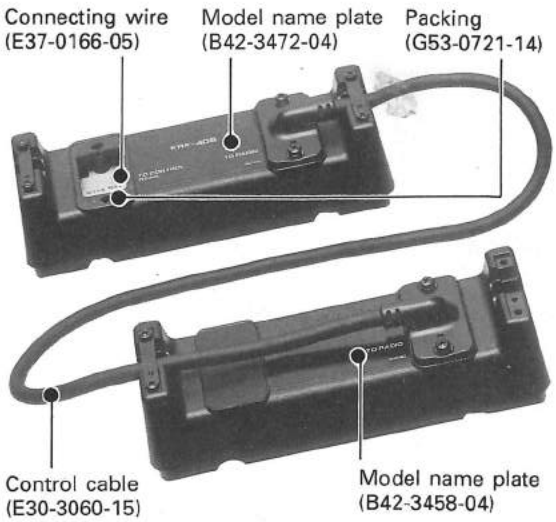

Photo is KRK-4DB.

CONTENTS

INSTALATION 2
DISASSEMBLY FOR REPAIR 10
CIRCUIT DESCRIPTION 12
PARTS LIST
: KRK-2 15
: KRK-3DH 16
: KRK-4DB 18
EXPLODED VIEW
: BODY 20
: HEAD 21
PACKING
: KRK-2 22
: KRK-3DH 23
: KRK-4DB 24
TERMINAL FUNCTIONS 25
SCHEMATIC DIAGRAM
: KRK-2 26
PC BOARD VIEWS
: KRK-2 29
: KRK-3DH 30
SCHEMATIC DIAGRAM
: KRK-3DH 31
PC BOARD VIEWS
: KRK-4DB 35
SCHEMATIC DIAGRAM
: KRK-4DB 37

INSTALLATION

1. Installing the Remote Kit (KRK-2)

The KRK-2 remote kit is used to remotely operate a TK-630/730/830 series radio (called radio 1 below). The KRK-2 is connected to a KCH-3 or KCH-4 with an optional KCT-12A (8 feet), KCT-12B (17 feet), or KCT-12C (25 feet) control cable.

1-1. Connection of radio 1 and KRK-2 (Fig. 1-1)

1. Remove the upper and lower halves of the case of radio 1.
2. Connect W105 of the control unit (X57-A/4) to CN2 of the KRK-2.
3. Install the KRK-2 on radio 1 using the four flat-headed screws (❶). Take care not to get W105 between the frame edges.
4. Short W106 on the control unit by soldering (Fig. 1-5). If you do not short it, the KRK-2 audio output will be reduced.
5. Reassemble the upper and lower halves of the case of radio 1.

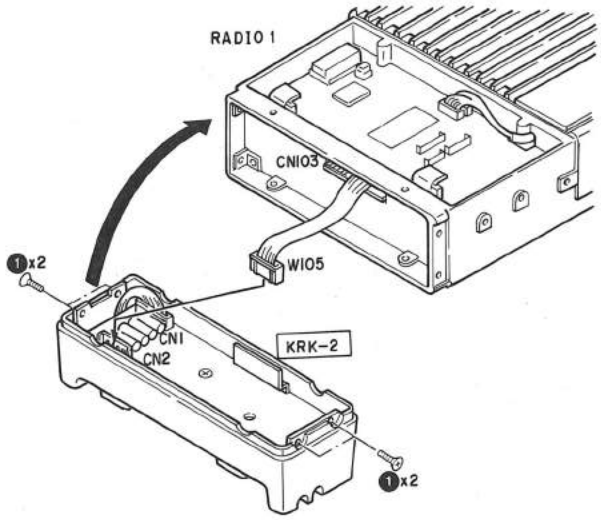

Fig. 1-1

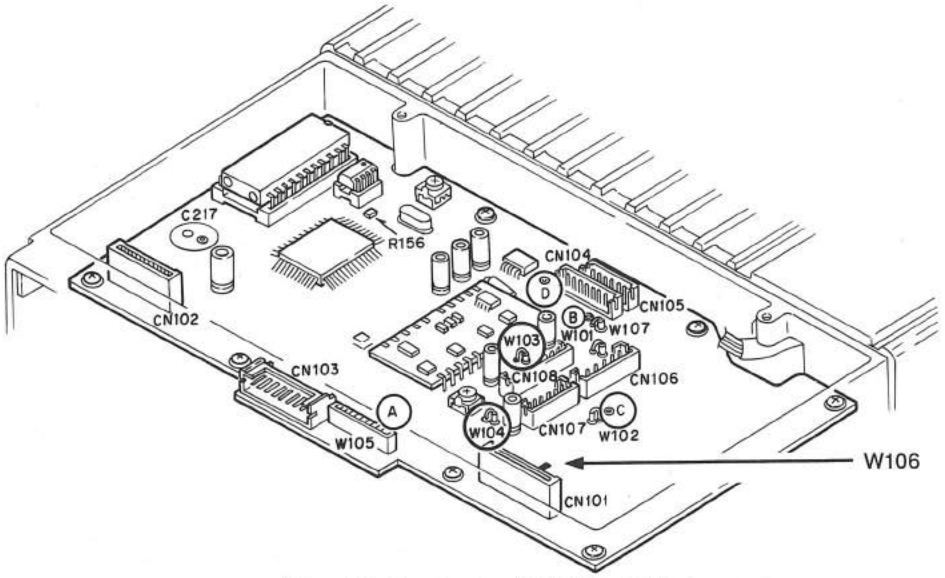

Fig. 1-5 Control unit (X57- A/4)

1-2. Display assembly (Fig. 2)

1. Remove the shorting plug from CN1 of the display unit (Only KCH-3). The following steps apply to both the KCH-3 and the KCH-4.
2. Connect the connector (W703) from the head to CN1 of the display unit (❶).
3. Connect the connector (W702) from the head to CN2 of the display unit (❷).
4. Remove the three screws (❸) on the back of the head, then remove the subpanel.
5. Install the head subpanel on the display unit subpanel (❹).

Note: Insert the head subpanel into the display unit subpanel.

6. Install the subpanel on the display unit with the four screws (N32-3006-46) (❺).
7. Fit the supplied packing (G53-0717-03) (❻), then install the head with the three screws that were removed in step 4.
8. Fit the rubber cap (B09-0328-04) on the supplied 6-pin short square plug, and fit the plug on the 6-pin ACC connector (Cut off the rubber cap end and fix it with a wire band) (❼).

INSTALLATION

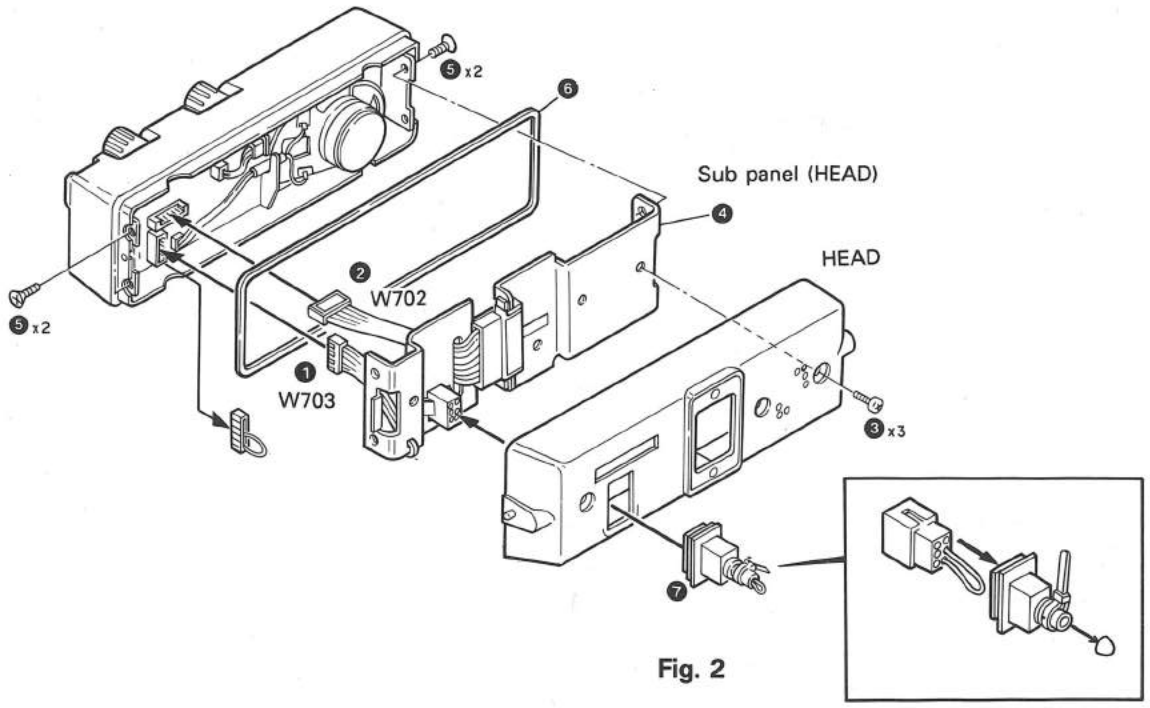

Fig. 2

1-3. Control cable connection (Fig. 3)

1. Connect one connector of the control cable to radio 1 (with KRK-2) and the other to the display. Connect the cable GND terminal with the binding screw (N35-3006-46) (❶) supplied with the control cable.
2. Secure the connector of the control cable to the KRK-2 with the two sems (N09-2166-05) (❷) according to the installation condition of radio 1. Secure the control cable on the KRK-2 with the cable fitting (J21-4354-04) (❹) and two screws (N09-0335-05) supplied with the KRK-2.
3. Secure the other connector of the control cable to the display unit with two sems (N09-2166-05) (❸) in the same way.

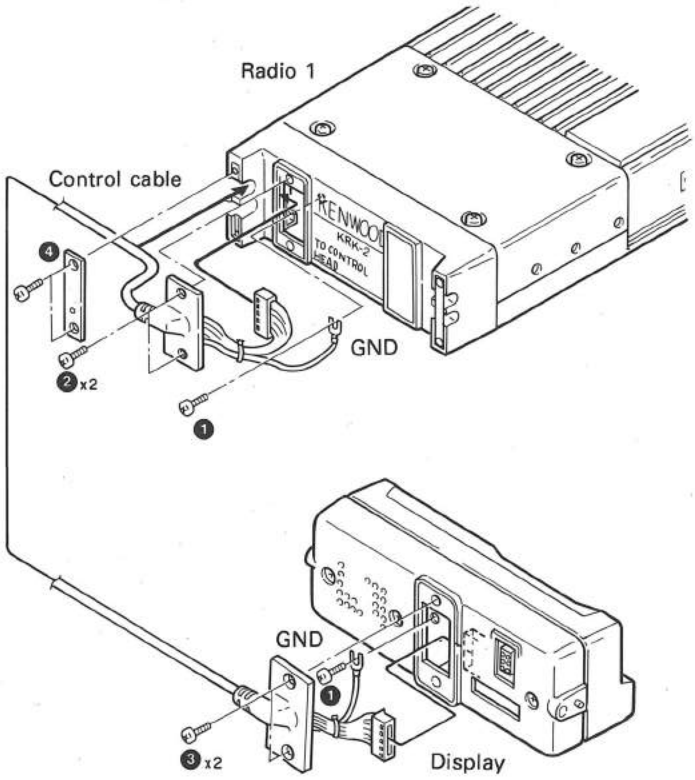

Fig. 3

INSTALLATION

1-4. Display installation (Fig. 4)

1. Install the display with the supplied angle bracket (J29-0460-03) (❶) and two decorative screws (N08-0526-04) (❷).

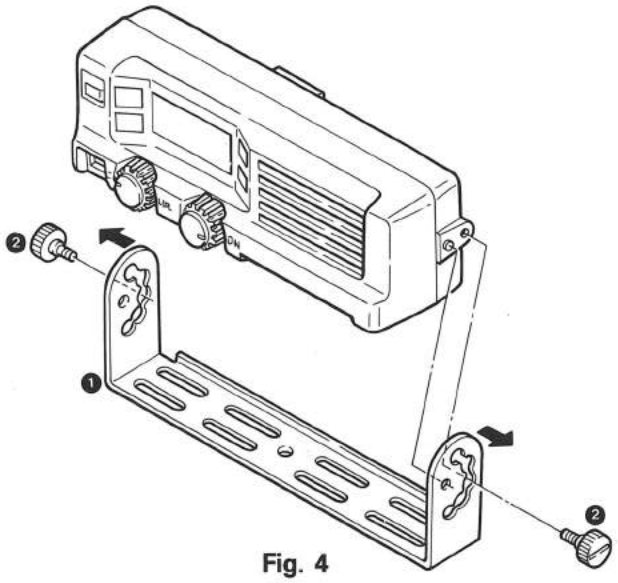

Fig. 4

1-5. Other modification (Fig. 5)

1. You can change the speaker output to 10W by shorting W10 on the KRK-2. If you use the KCH-3, you cannot use the internal speaker (because the maximum input is 5 W). Use the optional external speaker (KES-4) (maximum input: 20 W).

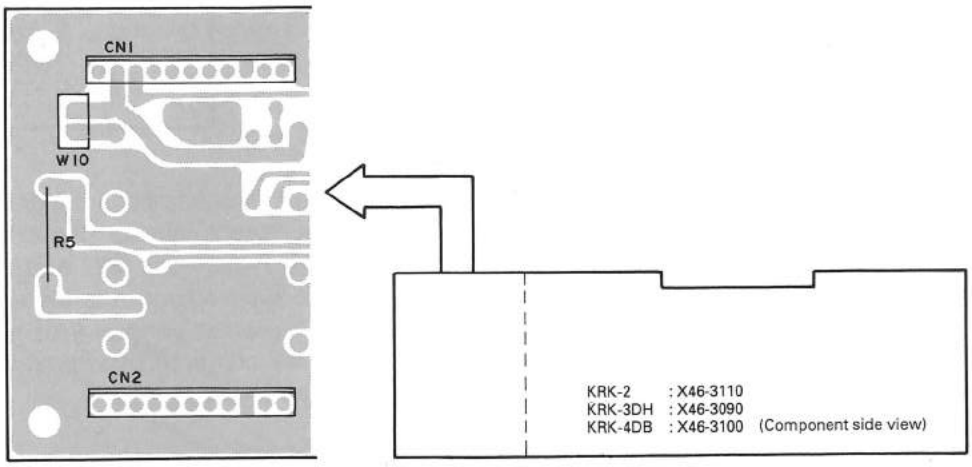

Fig. 5

2. Installing the Dual Control Head Remote Kit (KRK-3DH)

The KRK-3DH remote kit connects two displays (two KCH-3s or KCH-4s) to a TK-630/730/830 series radio. The KRK-3DH is connected to the KCH-3s or KCH-4s with two optional control cables. There are three version of the control cable : KCT-12A (8 feet), KCT-12B (17 feet), and KCT-12C (25 feet).

2-1. Connection of radio 1 and KRK-3DH (Fig. 1-2)

1. Remove the upper and lower halves of the case of radio 1.
2. Connect W105 on the control unit (X57-A/4) to CN2 of the KRK-3DH.
3. Connect W1 on the KRK-3DH to control unit CN103.
4. Install the KRK-3DH on radio 1 using the four flat head screws (N32-3006-46) (❶).
5. Short W106 on the control unit by soldering. (Fig. 1-5)
6. Reassemble the upper and lower halves of the case of radio 1.

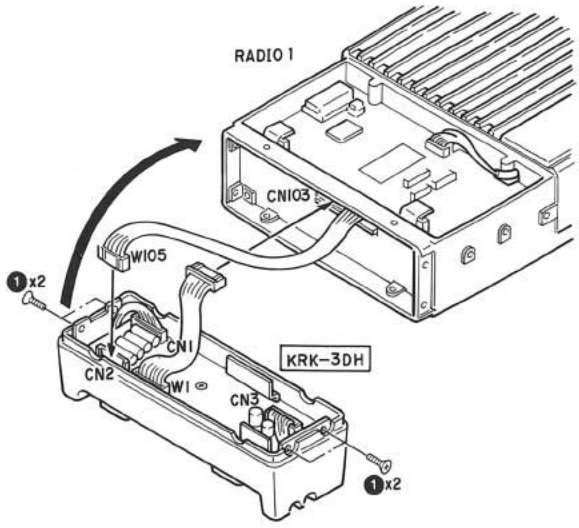

Fig. 1-2

INSTALLATION

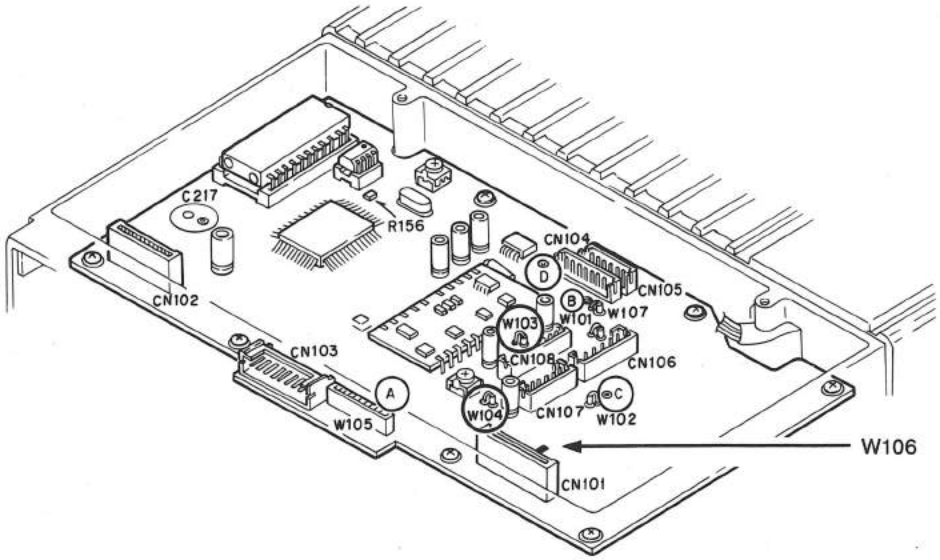

Fig. 1-5 Control unit (X57- A/4)

2-2. Assembly of Displays (displays 1 and 2) (Fig. 2)

1. Same as the KRK-2 display assembly procedure in Section 1-2. (Assemble the two displays in the same way.). See page 2.

2-3. Control cable connection (Fig. 6)

1. Use two control cables. Connect one and of one of the control cables to radio 1 (with KRK-3DH) and the other end to display 1. Connect one connector of the other control cable to radio 1 (with KRK-3DH) and the other to display 2. Connect each cable GND terminal with one of the binding screws (N35-3006-46) (❶) supplied with each control cable.
2. Secure each of the two connectors to the KRK-3DH with two sems (N09-2166-05) (❷) according to the installation condition of radio 1. Pass the control cables through the grooves at both ends of the KRK-3DH and secure the cables to the KRK-3DH with the cable fitting (J21-4354-04) and screws (N09-0335-05) (❷) supplied with the KRK-3DH (❹).
3. Secure the connectors of the control cables 3 to displays 1 and 2 with two sems (N09-2166-05) (❸).

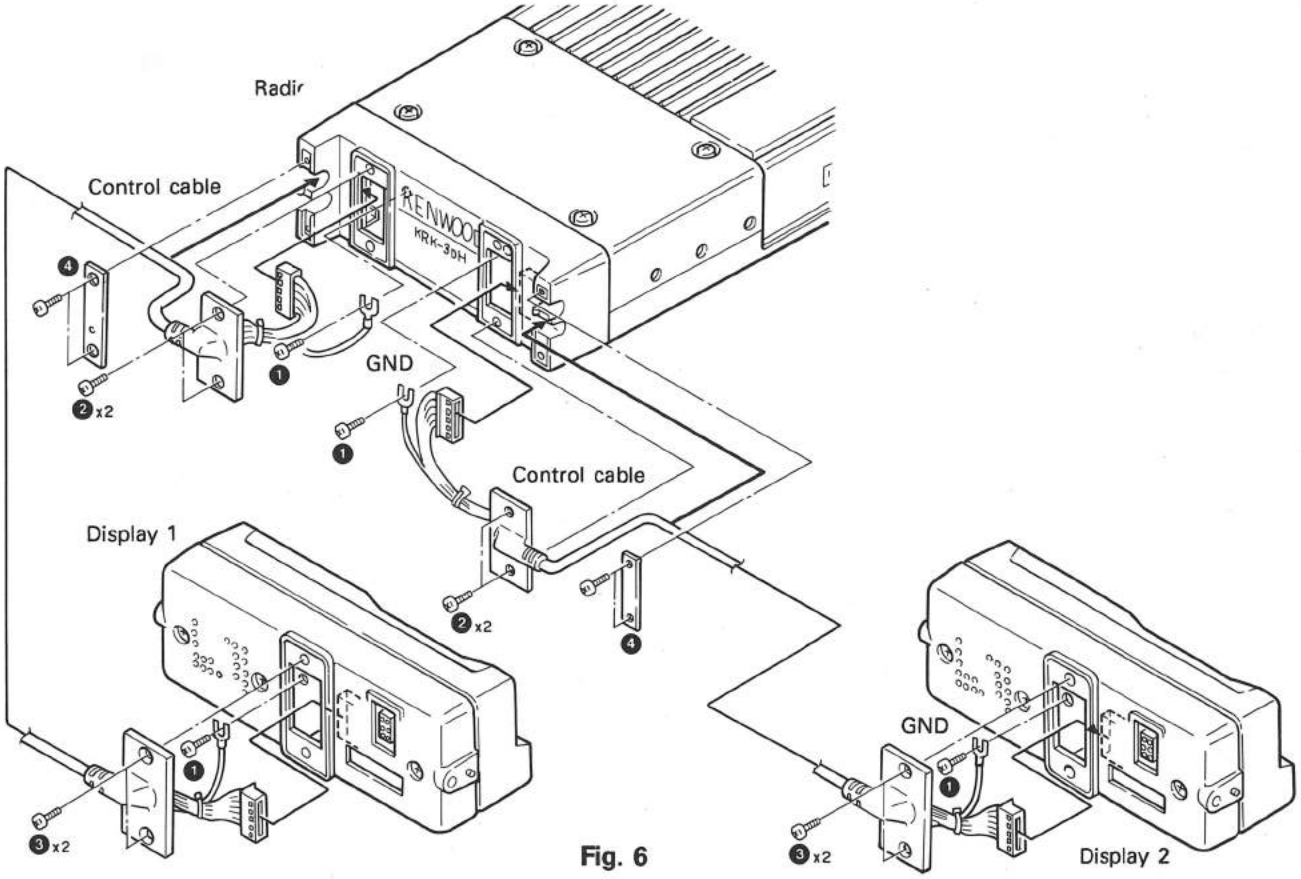

Fig. 6

INSTALLATION

2-4. Installation of displays 1 and 2 (Fig. 4)

1. Same as the KRK-2 display installation procedure in Section 1-4. (Install two displays.) See page 4.

2-5. Other modification (Fig. 5)

1. You can obtain the 12-W audio output from W703 of display 1 by shorting W10 on the KRK-3DH.

Note: If you use the KCH-3, you cannot use the internal speaker because its maximum input is 5 W. (Only display 1) Use the optional external speaker (KES-4).

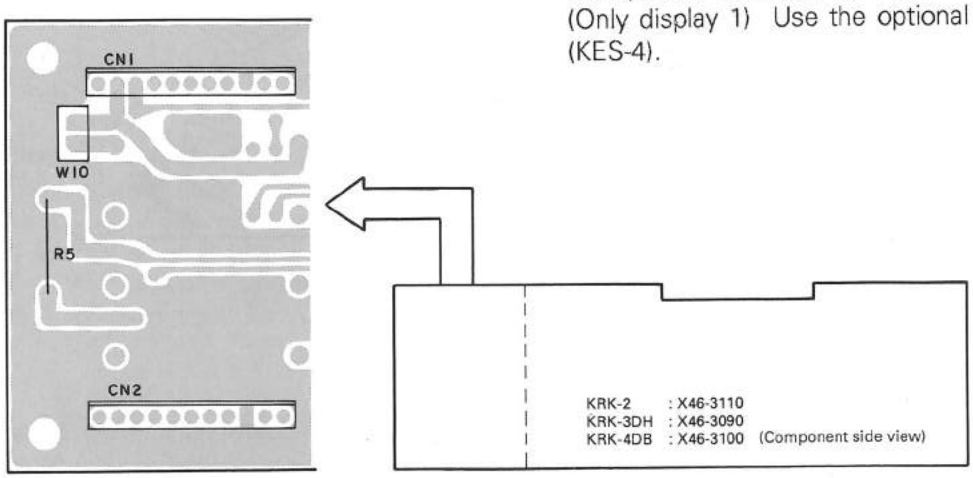

Fig. 5

3. Installing the Dual-Band Remote Kit (KRK-4DB)

The KRK-4DB remote kit controls two TK-630/730/830 series radios with one display (KCH-3 or KCH-4). The KRK-3DH is connected to one KCH-3 or KCH-4 and two radios (radios 1 and 2) with two optional control cables. There are three versions of the control cable:KCT-12A (8 feet), KCT-12B (17 feet), and KCT-12C (25 feet).

Note: For a combination of radio 1 and radio 2, see the system set-up "Table showing combinations of dual band" in the service manual for each radio.

3-1. Connection of radio 1 and KRK-4DB A/2 (unit with a relay) (Fig. 1-3)

1. Remove the upper and lower halves of the case of radio 1.
2. Connect W105 on the control unit (X57-A/4) of radio 1 to CN52 of the KRK-4DB A/2
3. Connect W55 on the KRK-4DB A/2 to control unit CN103.
4. Install the KRK-4DB A/2 on radio 1 using the four flat-headed screws (N32-3006-46) (❶).
5. Short W106 on the control unit by soldering. (Fig. 1-5)
6. Reassemble the upper and lower halves of the case of radio 1.

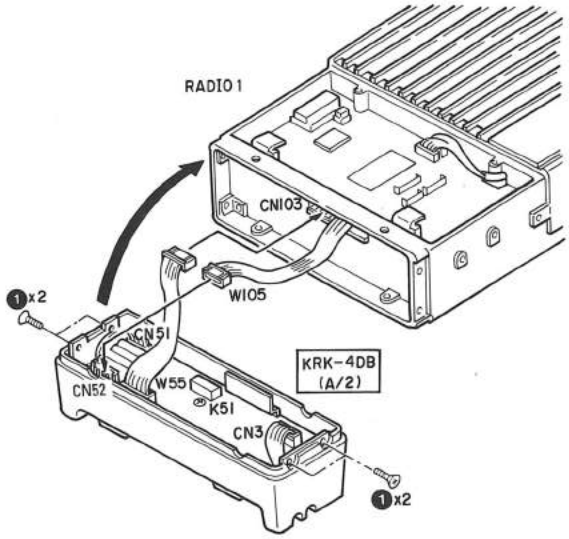

Fig. 1-3

INSTALLATION

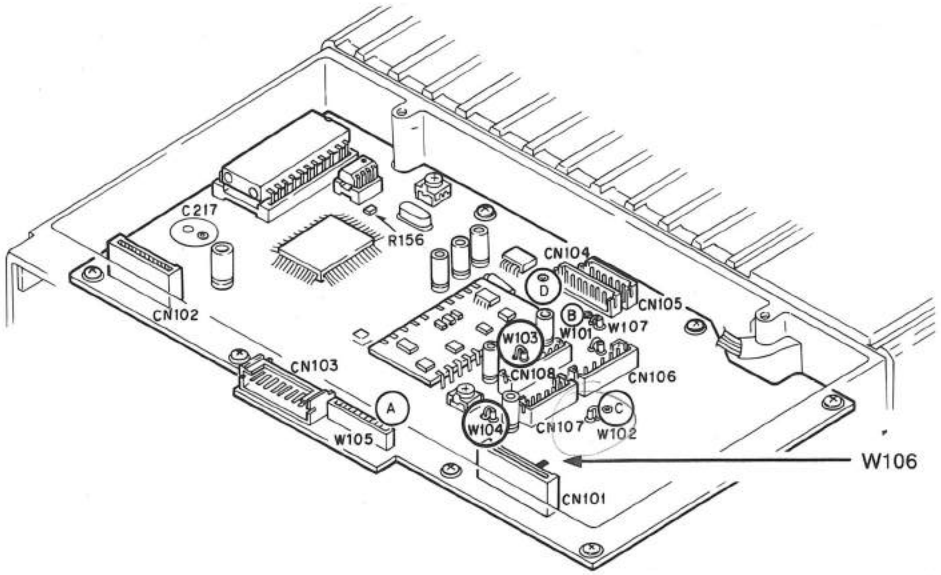

Fig. 1-5 Control unit (X57- A/4)

3-2. Connection of radio 2 and KRK-4DB B/2 (Fig. 1-4)

1. Remove the upper and lower halves of the case of radio 2.
2. Connect W105 on the control unit of radio 2 to CN2 of the KRK-4DB B/2.
3. Connect W5 on the KRK-4DB B/2 to control unit CN103.
4. Install the KRK-4DB B/2 on radio 2 using the four flat-headed screws (N32-3006-46) (❶). (Fig. 1-3)
5. Cut W102 on the control unit, then connect A and C on the control unit. (Fig. 8)
6. Reassemble the upper and lower halves of the case of radio 2.

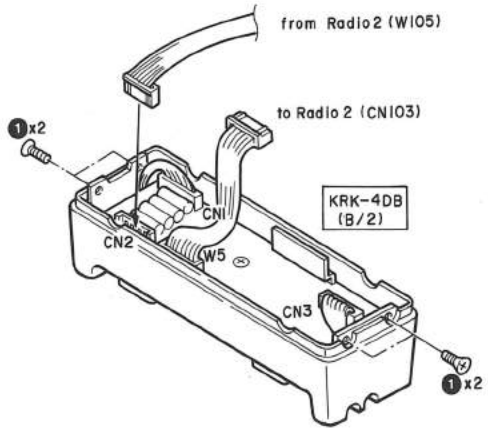

Fig. 1-4

INSTALLATION

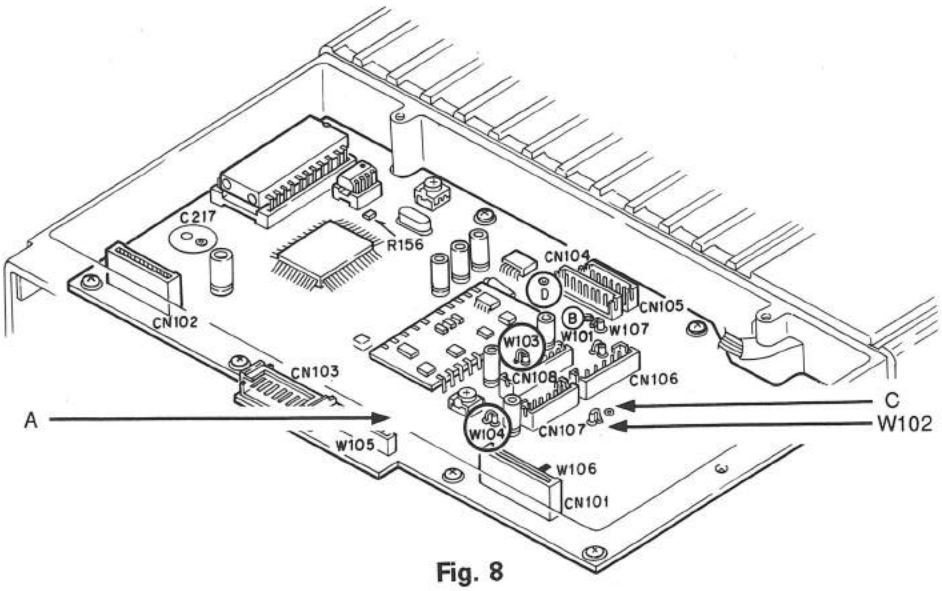

Fig. 8

3-3. Connection of radio 1 and radio 2 (Fig. 7)

1. Connect one end of one of the control cables to the TO RADIO connector (right) of radio 1, and the other end to the TO RADIO connector of radio 2. Connect each cable GND terminal with one of the binding screws (N35-3006-46) supplied with each control cable (❶).
2. Secure the control cable connectors to radio 1 and the radio 2 with two sems (❷) according to the installation condition of the radios. Pass the control cables through the grooves at both ends of the KRK-4DB and secure the cables to the KRK-4DB A/2 and B/2 with the cable fitting (J21-4354-04) and screws (N09-0335-05) (❷) supplied with the KRK-4DB.

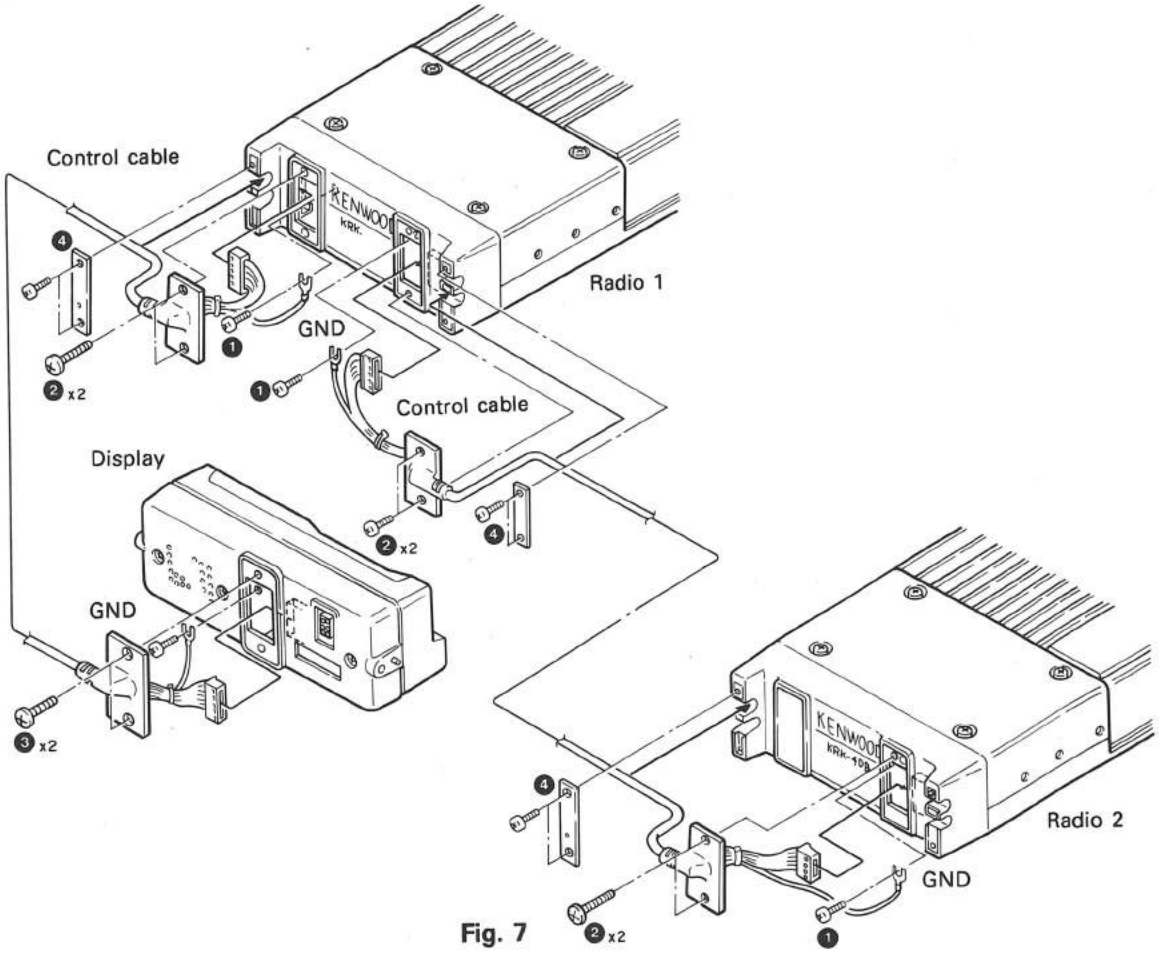

Fig. 7

INSTALLATION

3-4. Assembly of Display (Fig. 2)

1. Same as the KRK-2 display assembly procedure in Section 1-2. See page 2.

3-5. Connection of radio 1 and display (Fig. 7)

1. Connect one end of one of the control cables to the TO CONTROL connector of radio 1, and the other end to the TO RADIO connector of the display. Connect each of the GND terminals at both ends of the cable to radio 1 (with KRK-4DB A/2) and the display with one of the binding screws (N35-3006-46) (❶) supplied with the control cable.
2. Secure the control cable connectors to radio 1 (with KRK-4DB A/2) and the display with two sems (❸) according to the installation condition of the radio. Pass the control cable through the groove on the back of the KRK-4DB A/2 and secure the cable to the KRK-4DB A/2 with the cable fitting and screws (❷) supplied with the KRK-4DB A/2.

3-6. Installation of display (Fig. 4)

1. Same as the KRK-2 display installation procedure in Section 1-4. See page 4.

3-7. Other modification (Fig. 5)

1. You can obtain the 12-W audio output from W703 of the display by shorting W10 on the KRK-4DB.

Note: If you use the KCH-3, you cannot use the internal speaker because its maximum input is 5 W. Use the optional external speaker (KES-4).

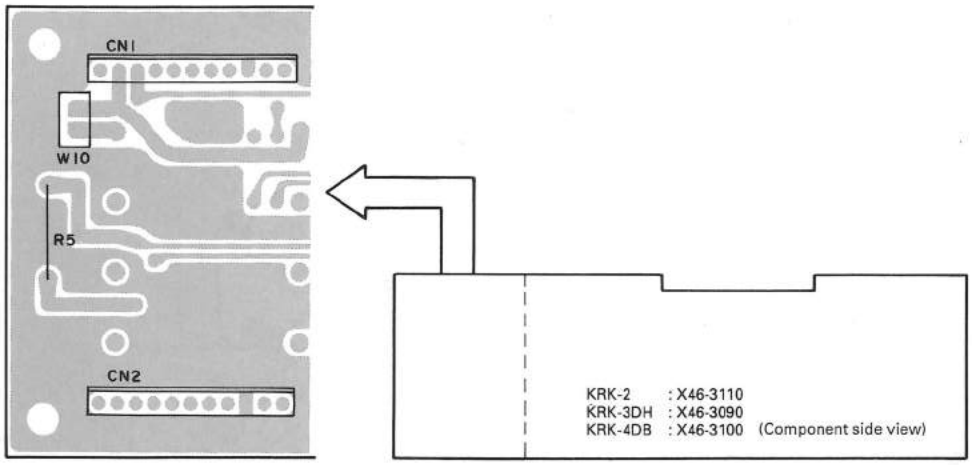

Fig. 5

DISASSEMBLY FOR REPAIR

1. Panel disassembly procedure (Fig. 1)

Figure 1 shows the KRK-2 as an example.

1. Remove the five screws holding the interface unit (KRK-2: X46-3110; KRK-3DH: X46-3090; KRK-4DB: X46-3100) (❶).
2. Unplug the connector (KRK-2: CN1, KRK-3DH/4DB: CN1, CN3) from the interface unit.
3. Remove the four screws (❷) holding the subpanel (❸).
4. See Figure 1-a for how to install the lead with a connector (❹).

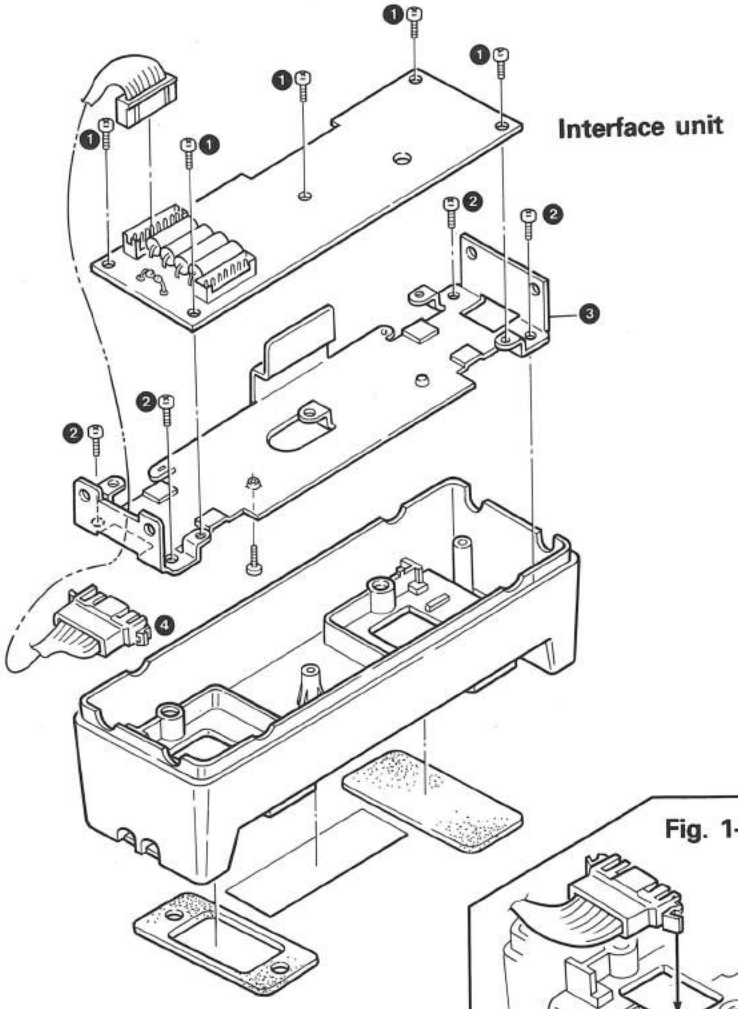

Fig. 1

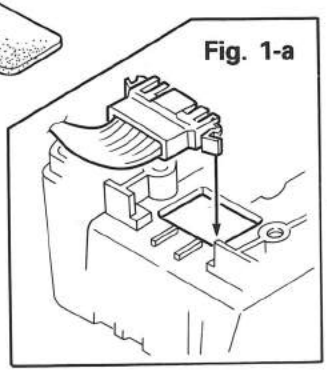

Fig. 1-a

DISASSEMBLY FOR REPAIR

2. Head disassembly (Fig. 2)

Remove the three screws (❶) holding the sub-panel (❷).

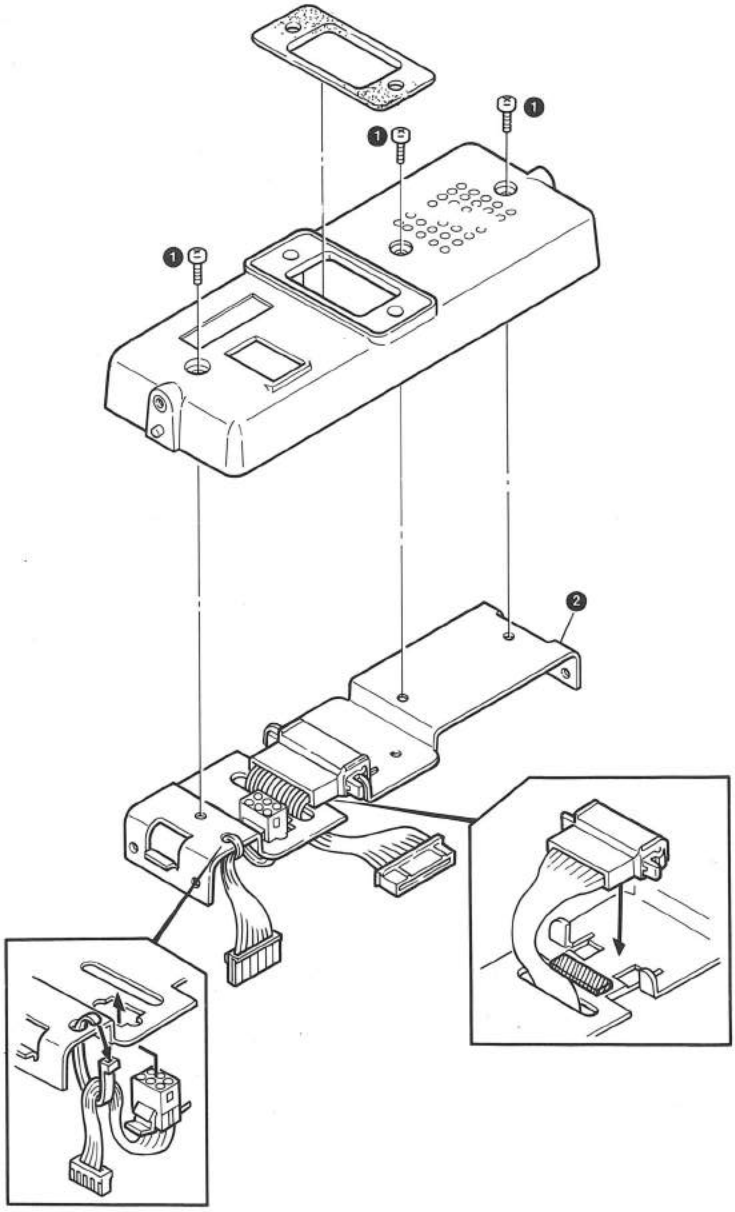

Fig. 2

KRK-2/3DH/4DB

CIRCUIT DESCRIPTION

Dual-head interface unit : KRK-3DH

1. RECEIVER CIRCUIT (Fig. 1)

The audio signal received by the radio passes through CN2 pins 10 and 11 (RS1 and RS2) and W1 pin 1 (DE3), and goes to the interface unit (X46-3090-20). RS1 and RS2 of CN2 only pass through the interface unit, and are connected directly to CN1 pins 10 and 11 (RS1 and RS2). DE3 passes through the analog switch of IC5 (BU4066BF) controlled by the shift register of IC3 (BU4094F), and goes to HIC IC6 (KCE02) . This HIC contains a de-emphasis and a 300-Hz to 3-kHz band-pass filter. The volume of the signal from IC6 is controlled by the IC7 (M5282FP) VCA (electronic volume control), and the signal goes to IC8 (μPc1241H). The signal entering IC8 is amplified by the AF power amplifier, and supplied from CN3 pin 11 (RS22) to head 2. Q2 (25D1757K) is controlled by the shift register of muting transistor IC2 (BU4094F).

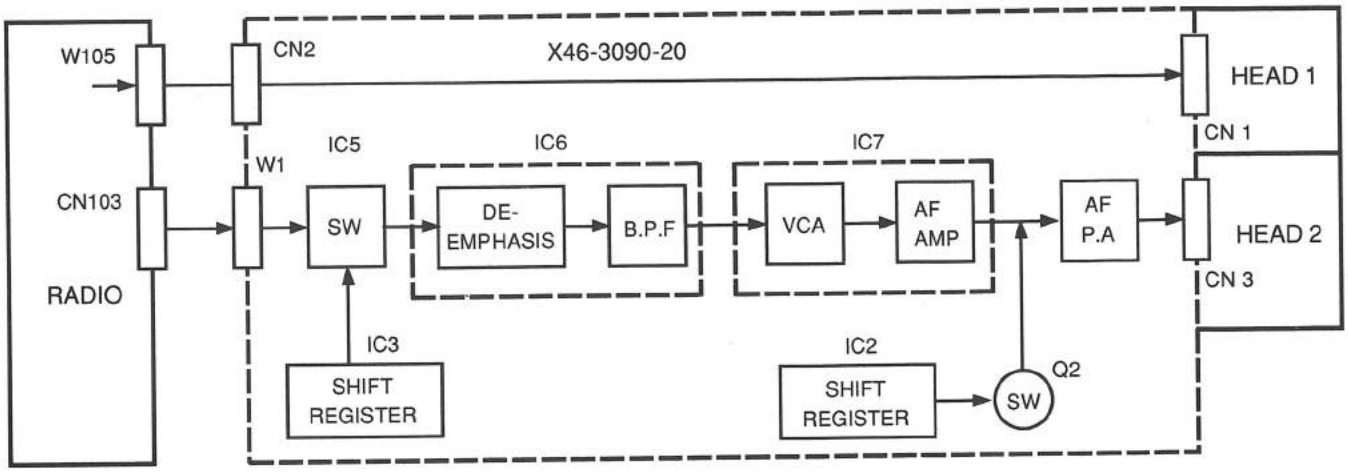

Fig. 1 RECEIVER BLOCK DIAGRAM

2. VOLUME CONTROL CIRCUIT (Fig. 2)

The DC voltage of the head 1 volume is applied to the analog switch of IC5 (BU4066BF) from CN1 pin 4 (VOL) and enters the radio from CN2 pin 4 (VOL). The DC voltage of the head 2 volume is supplied from CN3 pin 4 (VOL2) to the VCA (electronic volume) of IC7 (M5282FP). When the public addressing (PA) is used, the volume DC voltage enters the analog switch of IC5, and enters the radio from CN2 pin 4. IC5 is controlled by IC3 (BU4094F). Q1 (DTC114EK) is used to reverse the control signal.

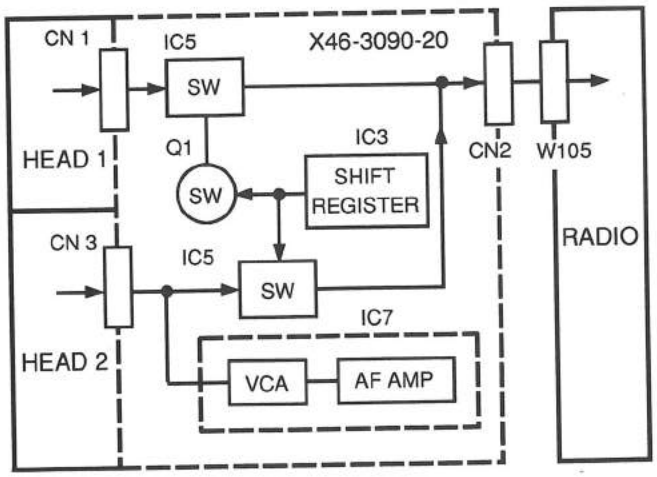

Fig. 2 VOLUME CONTROL BLOCK DIAGRAM

3. TRANSMITTER CIRCUIT (Fig. 3)

When you press the PTT button on head 1 and talk into the microphone, the audio signal goes to the analog switch of IC4 (BU4066BF) from CN1 pin 2 (MIC), and enters the radio from CN2 pin 2 (MIC). When you press the PTT button on head 2 and talk into the microphone, the audio signal goes to the analog switch of IC4 from CN3 pin 2 (MIC2), and enters the radio from CN2 pin 2. IC4 is controlled by IC2 (BU4094F).

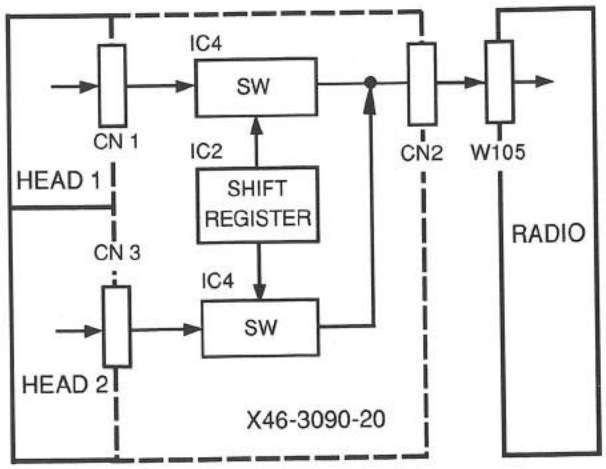

Fig. 3 TRANSMITTER BLOCK DIAGRAM

CIRCUIT DESCRIPTION

Dual-band interface unit : KRK-4DB

1. RECEIVER CIRCUIT (Fig. 4)

The audio signal received by radio 1 is processed by radio 1, and the resulting signal enters pins 10 and 11 (RS1 and RS2) of CN52 of the interface unit (X46-3100-20 A/2). This signal passes through the band-pass filter and AF power amplifier, and is output to CN51 pins 10 and 11 (RS1 and RS2). The audio signal received by radio 2 is input to pin 1 (DE3) of W5 of the interface unit (B/2). The signal is output to CN3 pin 11 (DE3). The signal passes through the cable between the radios and enters pin 11 (DE3) of CN53 of the interface unit A/2. The input signal passes through the analog switch of IC52 (TC4S66F) and enters radio 1 from W55 pin 1 (DE3). The signal is processed internally by radio 1, enters the interface unit again from CN52 pins 10 and 11 (RS1 and RS2), and is output to CN51 pins 10 and 11. IC52 is controlled by IC57 (BU4094BF), but the level is shifted by Q52 (DTC114EK) because the operating voltage is different.

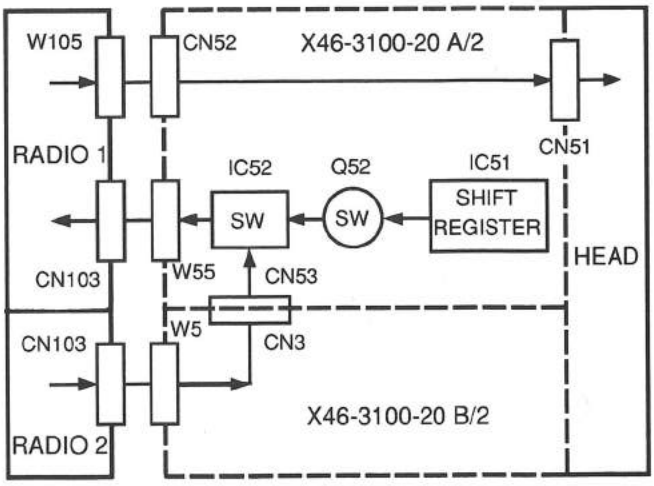

Fig. 4 RECEIVER BLOCK DIAGRAM

2. TRANSMITTER CIRCUIT (Fig. 5)

If the channel displayed on the control head LCD is for radio 1: When you press the PTT button on the head and talk into the microphone, the audio signal goes to the K51 relay of the interface unit (X46-3100-20 A/2) from CN51 pin 2 (MIC). The signal is then output from CN52 pin 2 (MIC) and enters radio 1.

If the channel displayed on the LCD is for radio 2: The audio signal passing through K1 of the interface unit (A/2), is output from CN53 pin 2 (MIC), and enters CN3 pin 2 (MIC). This signal is output to CN2 pin 2 (MIC), and enters radio 2. The K51 relay is controlled by IC51 (BU4094), but it is energized by Q51 (DTD114EK) since the current is not enough.

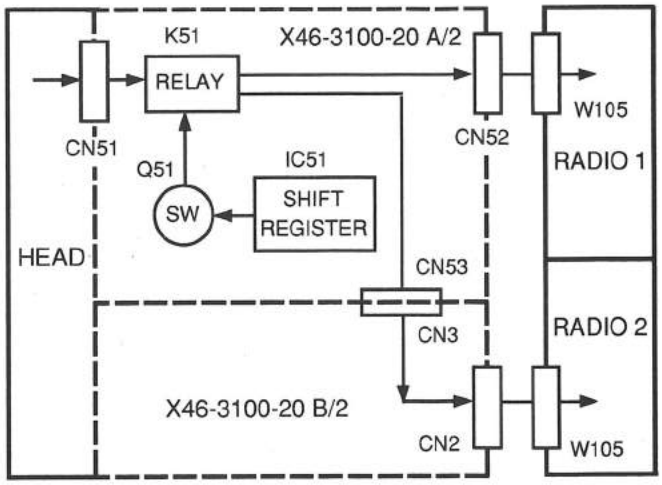

Fig. 5 TRANSMITTER BLOCK DIAGRAM

DESCRIPTION OF COMPONENTS

INTERFACE UNIT (X46-3090-20) : KRK-3DH

Ref. No.	Part No.	Use/Function	Operation/Condition
IC1	NJM78L08UA	AVR	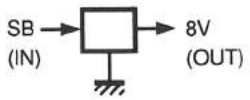
IC2,3	BU4094BF	Shift register	
IC4,5	BU4066BF	Analog switch	
IC6	KCE02	AF BPF	1 : Input 3,4 : Vcc 10 : Output
IC7	M5284FP	VCA	
IC8	μPC1241H	AF amplifier	
Q1	DTC114EK	DC switch	On when PTT SW on (Display 2 : PA), On when SP SW on (Display 2).
Q2	2SD1757(K)	Muting switch	
Q3	DTC114EK	DC switch	
D1	1SS226	Surge absorption	On when 5V or more, and 0V or less.
D2	1SS226	surge absorption	

INTERFACE UNIT (X46-3100-20) : KRK-4DB

Ref. No.	Part No.	Use/Function	Operation/Condition
IC51	BU4094BF	Shift register	
IC52	TC4S66F	DET switch (Radio 2)	On when Radio 2 on.
Q51	DTD114EK	MIC change switch (Radio 1, Radio 2)	On when PTT SW on (Radio 2).
Q52	DTC114EK	DET switch (Radio 2)	On when Radio 1 on.
D1	1SS226	Surge absorption	On when 5V or more, and 0V or less.
D2	1SS226	Surge absorption	
D51	1SS193	Limiter	
D52	1SS226	Surge absorption	On when 5V or more, and 0V or less.
D53	1SS226	Surge absorption	

PARTS LIST

* New Parts
Parts without **Parts No.** are not supplied.
Les articles non mentionnes dans le **Parts No.** ne sont pas fournis.
Teile ohne **Parts No.** werden nicht geliefert.

KRK-2
INTERFACE UNIT (X46-3110-20)

Ref. No. 参照番号	Address 位置	New Parts 新	Parts No. 部品番号	Description 部品名／規格	Destination 仕向	Remarks 備考
KRK-2						
		*	A62-0081-02	CASE(HEAD)		
1	2B	*	A22-0778-03	SUB PANEL		
2	3C	*	A22-0779-13	SUB PANEL(HEAD)		
3	3B	*	A62-0080-02	CASE		
5	3B	*	A62-0082-04	PLATE		
7	2C	*	A62-0115-03	PANEL ASSY(HEAD)		
			B42-3317-04	LABEL(S/NO)		
8	2F	*	B09-0328-04	CAP		
10	3A	*	B42-3457-04	MODEL NAME PLATE		
11	2A,2C	*	B42-3474-04	LABEL(M3X6 MAX)		
12	1F	*	B62-0079-00	INSTRUCTION MANUAL		
14	2E	*	E30-3085-05	GROUND LEAD WIRE		
15	2F		E31-6093-05	SHORT PLAG(ACC)		
16	2A,2C	*	E37-0166-05	CONNECTING WIRE(11P)		
17	3C	*	E37-0167-15	CONNECTING WIRE(6P)		
19	2C		G13-0864-04	CUSHION		
20	2E	*	G53-0717-03	PACKING		
21	3A,1C		G53-0721-14	PACKING		
			H25-0029-04	PROTECTION BAG		
			H25-0096-04	PROTECTION BAG		
			H25-0103-04	PROTECTION BAG		
			H25-0120-04	PROTECTION BAG		
23	3F	*	H10-2722-02	POLYSTYRENE FOAMED FIXTURE		
24	1F	*	H11-0854-04	POLYSTYRENE PLATE		
30	3E	*	H52-0097-04	ITEM CARTON BOX		
32	2F	*	J21-4354-04	MOUNTING HARDWARE		
33	2F	*	J29-0460-13	ANGLE BLACKET		
34	2F		J61-0307-05	WIRE BAND		
36	2F	*	N08-0526-04	DRESSED SCREW		
40	2F	*	N99-0361-05	SCREW SET		
A			N87-3008-46	BRAZIER HEAD TAPTITE SCREW		
B			N87-2606-46	BRAZIER HEAD TAPTITE SCREW		
C			N35-4006-45	BINDING HEAD MACHINE SCREW		
41	1A	*	X46-3110-20	INTERFACE UNIT		
INTERFACE UNIT (X46-3110-20)						
CN1 ,2			E40-3255-05	PIN CONNECTOR(11P)		
R1 -4			RS14KB3F220J	FL-PROOF RS 22 J 3W		
R5			R92-1281-05	FIXED RESISTOR 4.7		
W1 ,2			R92-0150-05	JUMPER REST 0 OHM		
			212-7006-05	PLASTIC TUBE		

L:Scandinavia **K:**USA **P:**Canada
Y:PX(Far East, Hawaii) **T:**England **E:**Europe
Y:AAFES(Europe) **X:**Australia **M:**Other Areas

⚠ indicates safety critical components.

PARTS LIST

* New Parts
Parts without **Parts No.** are not supplied.
Les articles non mentionnes dans le **Parts No.** ne sont pas fournis.
Teile ohne **Parts No.** werden nicht geliefert.

KRK-3DH
INTERFACE UNIT (X46-3090-20)

Ref. No. 参照番号	Address 位置	New Parts 新	Parts No. 部品番号	Description 部品名／規格	Destination 仕向	Remarks 備考
KRK-3DH						
		*	A62-0081-02	CASE(HEAD)		
1	2B	*	A22-0778-03	SUB PANEL		
2	3C	*	A22-0779-13	SUB PANEL(HEAD)		
3	3B	*	A62-0080-02	CASE		
7	2C	*	A62-0115-03	PANEL ASSY(HEAD)		
			B42-3317-04	LABEL(S/NO)		
8	2H	*	B09-0328-04	CAP		
10	3A	*	B42-3456-04	MODEL NAME PLATE		
11	2A,2C	*	B42-3474-04	LABEL(M3X6 MAX)		
12	1H	*	B62-0079-00	INSTRUCTION MANUAL		
14	1G	*	E30-3085-05	GROUND LEAD WIRE		
15	2H		E31-6093-05	SHORT PLAG(ACC)		
16	2A,2C	*	E37-0166-05	CONNECTING WIRE(11P)		
17	3C	*	E37-0167-15	CONNECTING WIRE(6P)		
18	1B		G02-0574-04	LEAF SPRING		
19	2C		G13-0864-04	CUSHION		
20	2G	*	G53-0717-03	PACKING		
21	3A,1C		G53-0721-14	PACKING		
			H25-0029-04	PROTECTION BAG		
			H25-0096-04	PROTECTION BAG		
			H25-0103-04	PROTECTION BAG		
			H25-0120-04	PROTECTION BAG		
23	2H	*	H10-2722-02	POLYSTYRENE FOAMED FIXTURE		
24	1H	*	H11-0854-04	POLYSTYRENE PLATE		
30	3G	*	H52-0096-04	ITEM CARTON BOX		
32	2H	*	J21-4354-04	MOUNTING HARDWARE		
33	1G,2H	*	J29-0460-13	ANGLE BLACKET		
34	2H		J61-0307-05	WIRE BAND		
36	2H	*	N08-0526-04	DRESSED SCREW		
40	2H	*	N99-0363-05	SCREW SET		
A			N87-3008-46	BRAZIER HEAD TAPTITE SCREW		
B			N87-2606-46	BRAZIER HEAD TAPTITE SCREW		
C			N35-4006-45	BINDING HEAD MACHINE SCREW		
41	1A	*	X46-3090-20	INTERFACE UNIT		
INTERFACE UNIT (X46-3090-20)						
C1 -8			CK73FB1H471K	CHIP C 470PF K		
C9			CC73FSL1H101J	CHIP C 100PF J		
C10 ,11			CK73FB1E103K	CHIP C 0.01UF K		
C12			CE04EW1C470M	ELECTRO 47UF 16WV		
C13			CK73FB1H102K	CHIP C 1000PF K		
C14			CK73FB1H471K	CHIP C 470PF K		
C15 ,16			CK73FB1H102K	CHIP C 1000PF K		
C17			CK73FB1E223K	CHIP C 0.022UF K		
C18			CE04EW1H0R1M	ELECTRO 0.1UF 50WV		
C19			CK73FB1H102K	CHIP C 1000PF K		
C20 ,21			CE04EW1C470M	ELECTRO 47UF 16WV		
C22			CQ92FM1H104K	MYLAR 0.10UF K		
C23			C90-2030-05	ELECTRO 1000UF 10WV		
C24			CE04EW1C470M	ELECTRO 47UF 16WV		
C25			CE04EW1C471M	ELECTRO 470UF 16WV		
C26			CK73FB1H102K	CHIP C 1000PF K		

L:Scandinavia **K:**USA **P:**Canada
Y:PX(Far East, Hawaii) **T:**England **E:**Europe
Y:AAFES(Europe) **X:**Australia **M:**Other Areas

⚠ indicates safety critical components.

PARTS LIST

* New Parts
Parts without **Parts No.** are not supplied.
Les articles non mentionnes dans le **Parts No.** ne sont pas fournis.
Teile ohne **Parts No.** werden nicht geliefert.

INTERFACE UNIT (X46-3090-20)

Ref. No. 参照番号	Address 位置	New Parts 新	Parts No. 部品番号	Description 部品名／規格	Destination 仕向	Remarks 備考
C27 -33			CK73FB1H471K	CHIP C 470PF K		
C34			CC73FSL1H101J	CHIP C 100PF J		
C35			C92-0007-05	CHIP TAN 2.2UF 10WV		
C36			CK73FB1E104K	CHIP C 0.10UF K		
C37			CK73FB1H102K	CHIP C 1000PF K		
C38			CK73FB1E223K	CHIP C 0.022UF K		
C39			CK73FB1H472K	CHIP C 4700PF K		
C40			CK73FB1H102K	CHIP C 1000PF K		
C41			CE04EW1C220M	ELECTRO 22UF 16WV		
C42			CK73FB1E104K	CHIP C 0.10UF K		
C43 ,44			CK73FB1H102K	CHIP C 1000PF K		
C45 -50			CC73FSL1H101J	CHIP C 100PF J		
CN1 -3			E40-3255-05	PIN CONNECTOR(11P)		
W1		*	E37-0184-05	CONNECTING WIRE		
R1 -4			RS14DB3F180J	FL-PROOF RS 18 J 3W		
R5			RK73FB2A473J	CHIP R 47K J 1/10W		
R6			RK73FB2A102J	CHIP R 1.0K J 1/10W		
R7			RK73FB2A332J	CHIP R 3.3K J 1/10W		
R8			RK73FB2A473J	CHIP R 47K J 1/10W		
R9			RK73FB2A333J	CHIP R 33K J 1/10W		
R10			RK73FB2A562J	CHIP R 5.6K J 1/10W		
R11			RK73FB2A473J	CHIP R 47K J 1/10W		
R12			RK73FB2A103J	CHIP R 10K J 1/10W		
R13			RK73FB2A823J	CHIP R 82K J 1/10W		
R14			RK73FB2A333J	CHIP R 33K J 1/10W		
R15			RK73FB2A104J	CHIP R 100K J 1/10W		
R16			RK73FB2A102J	CHIP R 1.0K J 1/10W		
R17 ,18			RK73FB2A223J	CHIP R 22K J 1/10W		
R19			RK73FB2A183J	CHIP R 18K J 1/10W		
R20			RK73FB2A473J	CHIP R 47K J 1/10W		
R21			RK73FB2A222J	CHIP R 2.2K J 1/10W		
R22			R92-0670-05	CHIP R 0 OHM		
R23			RK73FB2A103J	CHIP R 10K J 1/10W		
R24			RK73FB2A471J	CHIP R 470 J 1/10W		
R25 ,26			RK73FB2A2R2J	CHIP R 2.2 J 1/10W		
R27 ,28			RK73FB2A102J	CHIP R 1.0K J 1/10W		
R29			R92-1281-05	FIXED RESISTOR 4.7		
D1 ,2			1SS226	DIODE		
IC1			NJM78L08UA	IC(VOLTAGE REGULATOR/ +8V)		
IC1			RC78L08UA	IC		
IC2 ,3			BU4094BF	IC(SHIFT/STORE REGISTER)		
IC4 ,5			BU4066BF	IC(ANALOG SWITCH X4)		
IC4 ,5			XRU4066BF	IC		
IC6			KCE02	IC(AF BPF)		
IC7			M5282FP	IC(ELECTRIC VOLUME)		
IC8			UPC1241H	IC		
Q1 ,3			DTC114EK	DIGITAL TRANSISTOR		
Q2			2SD1757K	TRANSISTOR		
			212-6010-05	PLASTIC TUBE		

L:Scandinavia **K:**USA **P:**Canada
Y:PX(Far East, Hawaii) **T:**England **E:**Europe
Y:AAFES(Europe) **X:**Australia **M:**Other Areas

⚠ indicates safety critical components.

PARTS LIST

× New Parts
Parts without **Parts No.** are not supplied.
Les articles non mentionnes dans le **Parts No.** ne sont pas fournis.
Teile ohne **Parts No.** werden nicht geliefert.

KRK-4DB
INTERFACE UNIT (X46-3100-20)

Ref. No. 参照番号	Address 位置	New Parts 新	Parts No. 部品番号	Description 部品名／規格	Destination 仕向	Remarks 備考
KRK-4DB						
		*	A62-0081-02	CASE(HEAD)		
1	2B	*	A22-0778-03	SUB PANEL		
2	3C	*	A22-0779-13	SUB PANEL(HEAD)		
3	3B	*	A62-0080-02	CASE		
5	3B	*	A62-0082-04	PLATE		
7	2C	*	A62-0115-03	PANEL ASSY(HEAD)		
			B42-3317-04	LABEL(S/NO)		
8	2J	*	B09-0328-04	CAP		
10	3A	*	B42-3458-04	MODEL NAME PLATE(RADIO 2)		
10	3A	*	B42-3472-04	MODEL NAME PLATE(RADIO 1)		
11	2A,2C	*	B42-3474-04	LABEL(M3X6 MAX)		
12	1J		B62-0079-00	INSTRUCTION MANUAL		
14	1I	*	E30-3085-05	GROUND LEAD WIRE		
15	2J		E31-6093-05	SHORT PLAG(ACC)		
16	2A,2C	*	E37-0166-05	CONNECTING WIRE(11P)		
17	3C	*	E37-0167-15	CONNECTING WIRE(6P)		
22	1I	*	E30-3060-15	CONTROL CABLE		
19	2C		G13-0864-04	CUSHION		
20	1I	*	G53-0717-03	PACKING		
21	3A,1C		G53-0721-14	PACKING		
			H25-0029-04	PROTECTION BAG		
			H25-0096-04	PROTECTION BAG		
			H25-0103-04	PROTECTION BAG		
			H25-0120-04	PROTECTION BAG		
23	2J	*	H10-2722-02	POLYSTYRENE FOAMED FIXTURE		
24	1J	*	H11-0854-04	POLYSTYRENE PLATE		
30	2J		H52-0098-04	ITEM CARTON BOX		
32	2J	*	J21-4354-04	MOUNTING HARDWARE		
33	2J	*	J29-0460-13	ANGLE BLACKET		
34	2J		J61-0307-05	WIRE BAND		
			N09-2166-05	SCREW(M4X16)		
			N35-3006-46	BINDING HEAD MACHINE SCREW		
36	2J	*	N08-0526-04	DRESSED SCREW		
40	1I	*	N99-0362-05	SCREW SET		
A			N87-3008-46	BRAZIER HEAD TAPTITE SCREW		
B			N87-2606-46	BRAZIER HEAD TAPTITE SCREW		
C			N35-4006-45	BINDING HEAD MACHINE SCREW		
41	1A	*	X46-3100-20	INTERFACE UNIT		
INTERFACE UNIT (X46-3100-20)						
C1 ,2			CK73FB1H471K	CHIP C 470PF K		
C3 ,4			CK73FB1H102K	CHIP C 1000PF K		
C51 -60			CK73FB1H471K	CHIP C 470PF K		
C61			CK73FB1E103K	CHIP C 0.01UF K		
C62 ,63			CK73FB1H102K	CHIP C 1000PF K		
C64 -66			CC73FSL1H101J	CHIP C 100PF J		
CN2 ,3			E40-3255-05	PIN CONNECTOR(11P)		
CN51-53			E40-3255-05	PIN CONNECTOR(11P)		
W5 ,55			E37-0184-05	CONNECTING WIRE(12P)		

L:Scandinavia **K:**USA **P:**Canada
Y:PX(Far East, Hawaii) **T:**England **E:**Europe
Y:AAFES(Europe) **X:**Australia **M:**Other Areas

⚠ indicates safety critical components.

PARTS LIST

× New Parts
Parts without **Parts No.** are not supplied.
Les articles non mentionnes dans le **Parts No.** ne sont pas fournis.
Teile ohne **Parts No.** werden nicht geliefert.

INTERFACE UNIT (X46-3100-20)

Ref. No. 参照番号	Address 位置	New Parts 新	Parts No. 部品番号	Description 部品名／規格	Destination 仕向	Remarks 備考
L1 ,2			L40-1092-48	SMALL FIXED INDUCTOR(1UH)		
L51 -54			L40-1092-48	SMALL FIXED INDUCTOR(1UH)		
R11 ,12			RK73FB2A102J	CHIP R 1.0K J 1/10W		
R13 -15			R92-0670-05	CHIP R 0 OHM		
R16			RK73FB2A333J	CHIP R 33K J 1/10W		
R51 -54			RS14DB3F180J	FL-PROOF RS 18 J 3W		
R55			R92-1281-05	FIXED RESISTOR		
R56			RK73FB2A473J	CHIP R 47K J 1/10W		
R57 ,58			RK73FB2A102J	CHIP R 1.0K J 1/10W		
R59			R92-0670-05	CHIP R 0 OHM		
K51			S51-2089-05	RELAY		
D1 ,2			1SS226	DIODE		
D51			1SS193	DIODE		
D52 ,53			1SS226	DIODE		
IC51			BU4094BF	IC(SHIFT/STORE REGISTER)		
IC52			TC4S66F	IC(BILATERAL SWITCH)		
Q51 ,52			DTD114EK	DIGITAL TRANSISTOR		
			212-6010-05	PLASTIC TUBE		

L:Scandinavia **K:**USA **P:**Canada
Y:PX(Far East, Hawaii) **T:**England **E:**Europe
Y:AAFES(Europe) **X:**Australia **M:**Other Areas

⚠ indicates safety critical components.

EXPLODED VIEW (BODY)

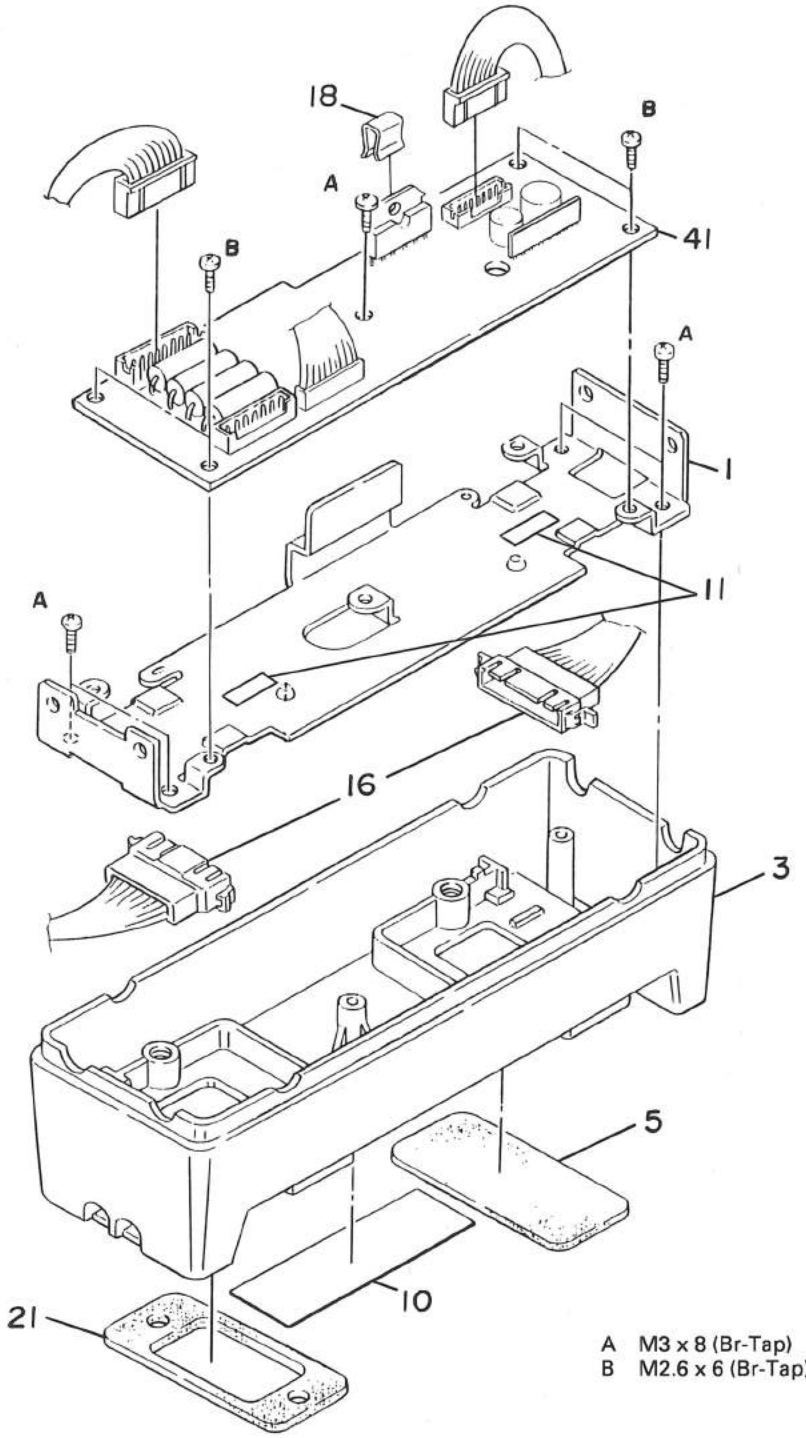

A M3 x 8 (Br-Tap) : N87-3008-46
B M2.6 x 6 (Br-Tap) : N87-2606-46

KRK-2/3DH/4DB

EXPLODED VIEW (HEAD)

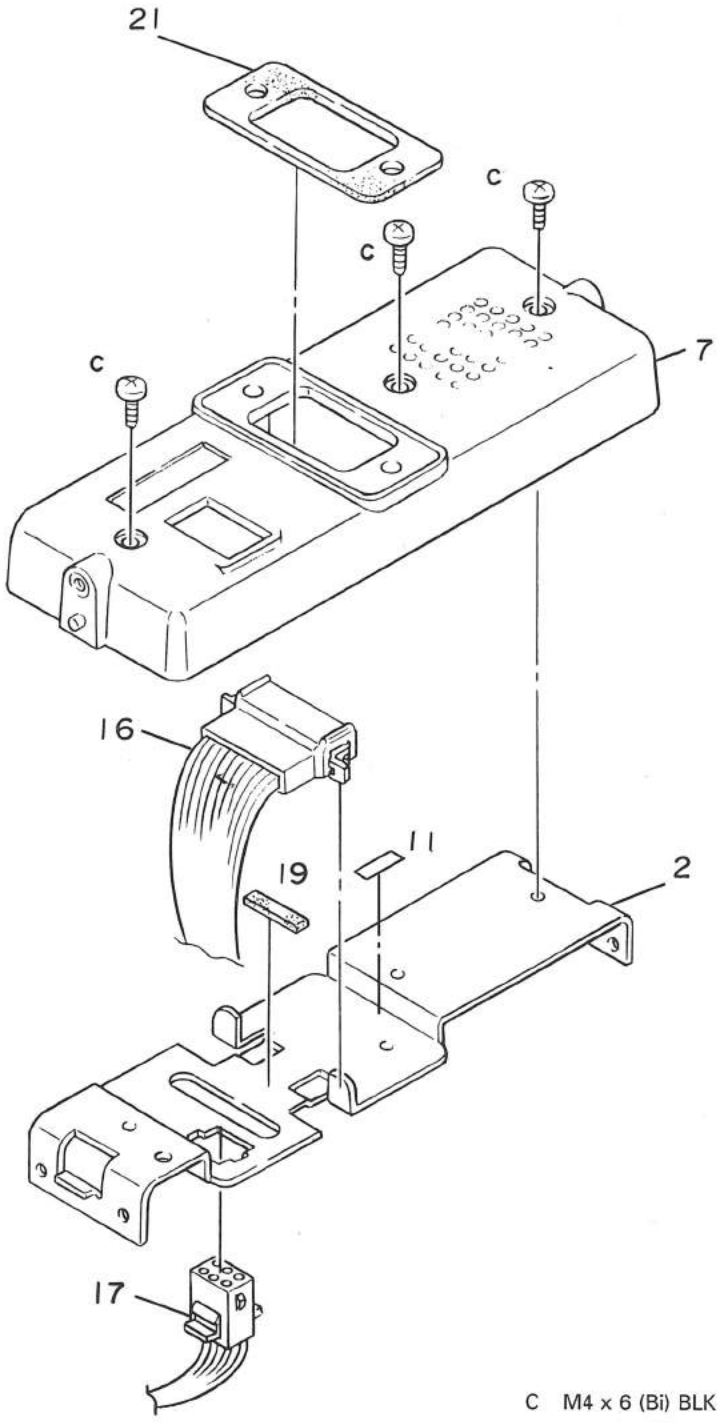

C M4 x 6 (Bi) BLK : N35-4006-45

KRK-2/3DH/4DB

PACKING : KRK-2 (REMOTE KIT)

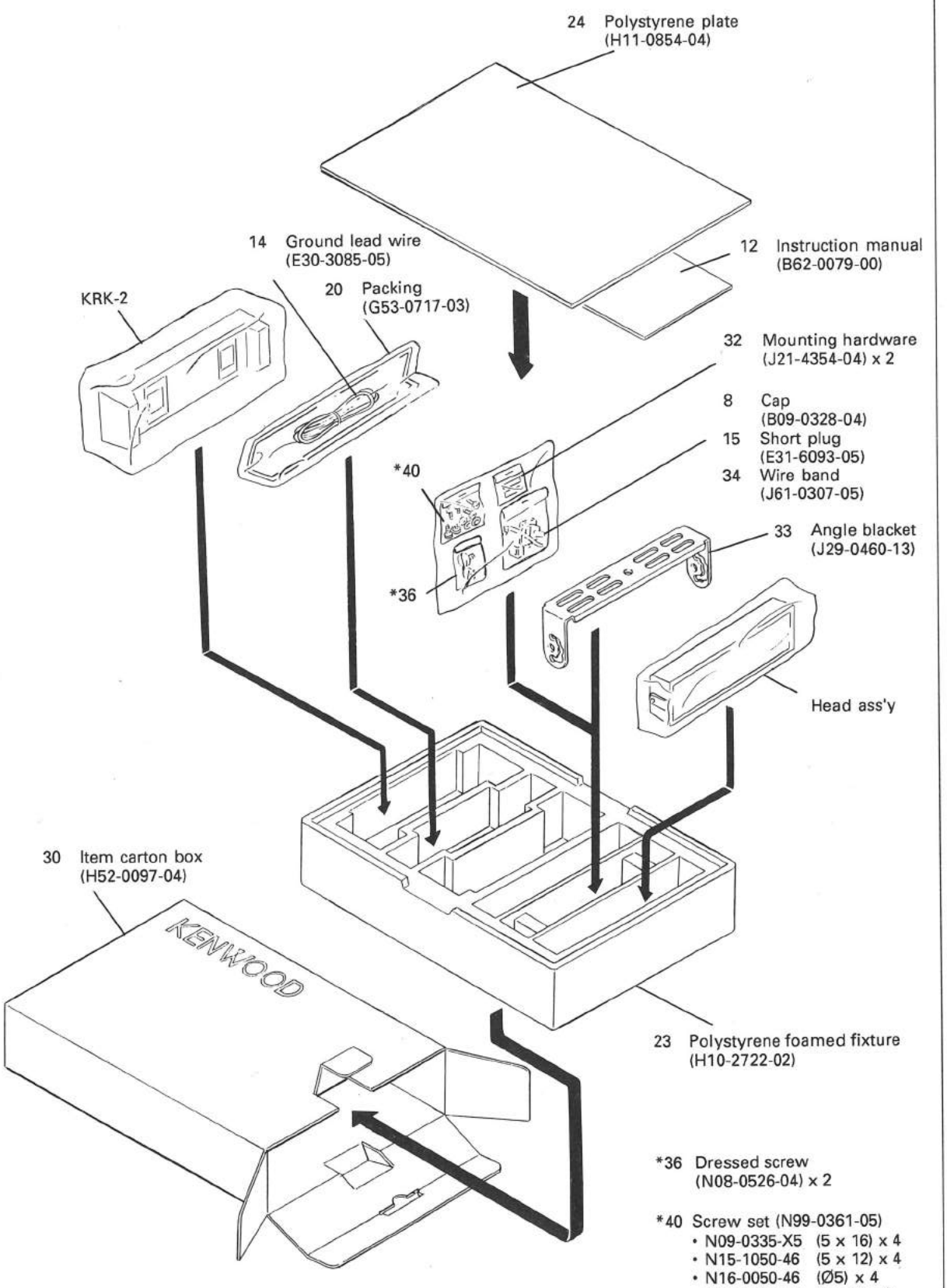

*36 Dressed screw
(N08-0526-04) x 2

*40 Screw set (N99-0361-05)
- N09-0335-X5 (5 x 16) x 4
- N15-1050-46 (5 x 12) x 4
- N16-0050-46 (Ø5) x 4
- N32-3006-46 (3 x 6) x 8
- N89-3008-45 (3 x 8) x 4

PACKING : KRK-3DH (DUAL CONTROL HEAD KIT)

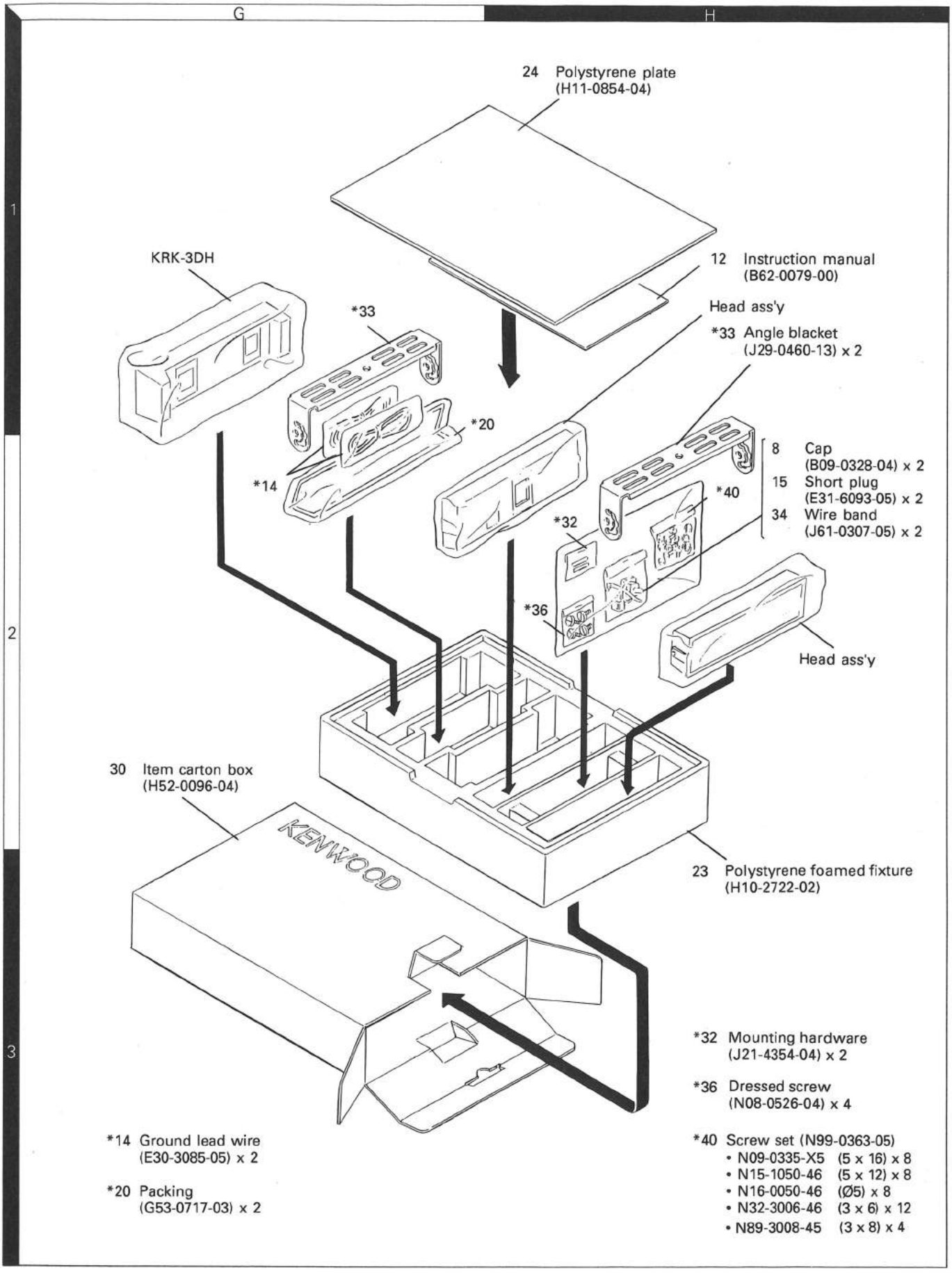

KRK-2/3DH/4DB

PACKING : KRK-4DB (DUAL BAND REMOTE KIT)

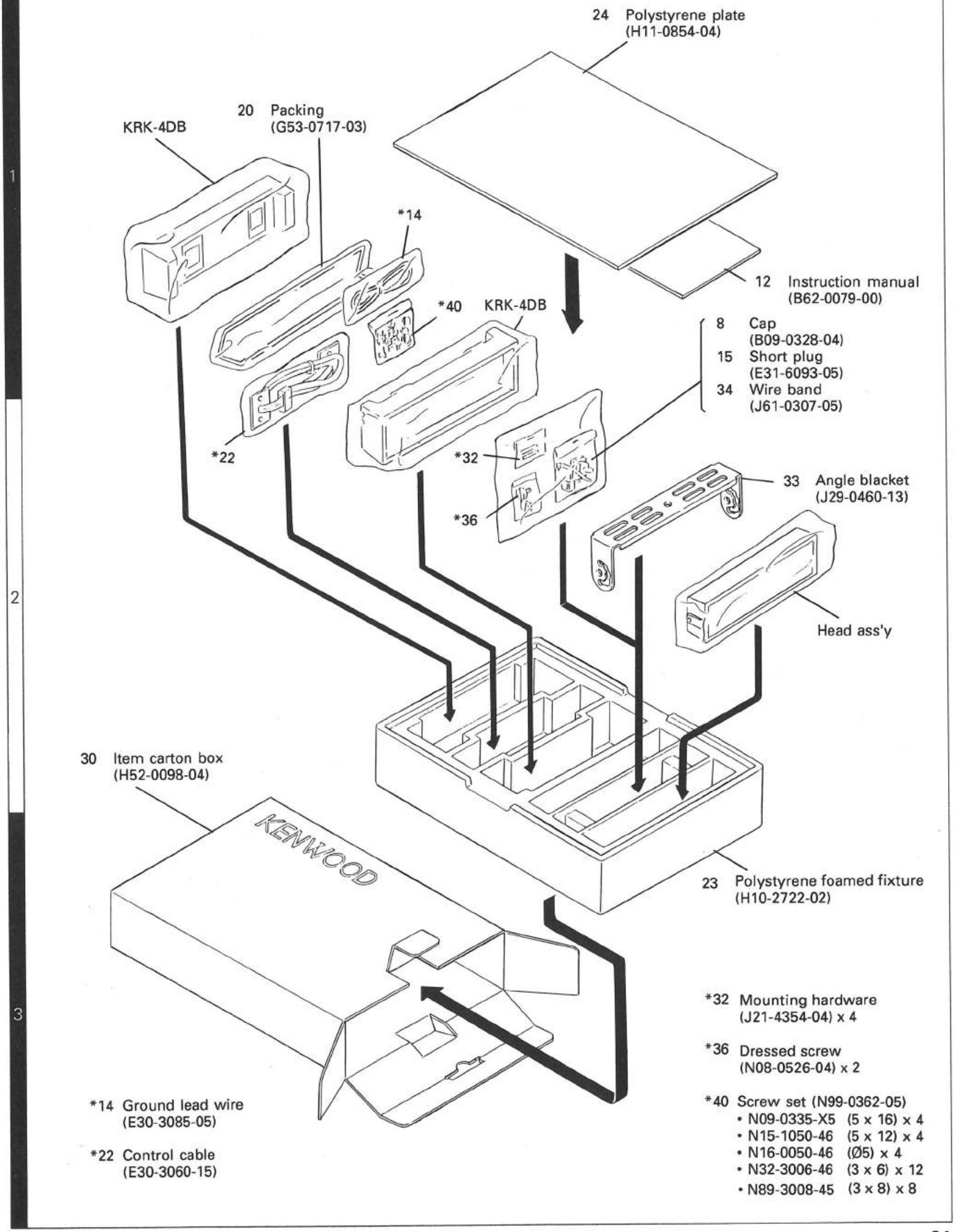

TERMINAL FUNCTIONS

Connector No.	Terminal No.	Terminal Name	I/O	Terminal Function
INTERFACE UNIT (X46-3110-20) : KRK-2 (X46-3090-20) : KRK-3DH (X46-3100-20) : KRK-4DB				
CN1	1	ME	–	MIC earth.
	2	MIC	I	MIC signal input.
	3	E	–	Earth.
	4	VOL	I	Analog switch.
	5	DD	I/O	DATA signal input/output.
	6	CD	O	CLOCK output.
	7	PS	I	Power switch control signal input.
	8	SPR	I	SPARE reserved input terminal.
	9	SB	O	Power output after power switch (13.4V).
	10	RS1	O	Output for remote speaker.
	11	RS2	O	Output for remote speaker.
CN2	1	ME	–	MIC earth.
	2	MIC	O	MIC signal output.
	3	E	–	Earth.
	4	VOL	O	Analog switch.
	5	DD	I/O	DATA signal input/output.
	6	CD	I	CLOCK input.
	7	PS	O	Power switch control signal output.
	8	SPR	O	SPARE reserved output terminal.
	9	SB	I	Power input after power switch (13.4).
	10	RS1	I	Input for remote speaker.
	11	RS2	I	Input for remote speaker.
W1	1	DE3	I	Detection signal input.
KRK-3DH	2	NC	–	Not use.
KRK-4DB	3	5C	I	Common 5V (5V ± 5%).
	4	BZ2	I	Beep input.
	5	RXD	–	Not use.
	6	TXD	–	Not use.
	7	CD2	I	CLOCK input.
	8	DD2	I/O	DATA input/output.
	9	EI	I	ENABLE interface input.
	10	CP	I	CLOCK input for PLL.
	11	DP	I	DATA input for PLL.
	12	E	–	Earth.

Connector No.	Terminal No.	Terminal Name	I/O	Terminal Function
CN3	1	ME	–	MIC earth.
KRK-3DH	2	MIC2	I	MIC signal input for HEAD 2.
	3	E	–	Earth.
	4	VOL2	I	Analog switch.
	5	DD2	I/O	DATA signal input/output for HEAD 2.
	6	CD2	O	CLOCK output for HEAD 2.
	7	PS	I	Power switch control signal input for HEAD 2.
	8	SPR	I	SPARE reserved input terminal.
	9	SB	O	Power output after power switch.
	10	RS12	O	Output for remote speaker.
	11	RS22	O	Output for remote speaker.
CN3	1	ME	–	MIC earth.
KRK-4DB	2	MIC	I	MIC signal input.
	3	E	–	Earth.
	4	NC	–	Not use.
	5	RXD	I/O	RX DATA input/output.
	6	TXD	I/O	TX DATA input/output.
	7	SB	I	Power input after power switch (13.4V).
	8	NC	–	Not use.
	9	NC	–	Not use.
	10	NC	–	Not use.
	11	DE3	O	Detection signal output.

KRK-2 SCHEMATIC DIAGRAM

OPTION
KCH-3
(X54-3100-20)(A/2)
KCH-4
(X54-3110-20)(A/2)

(X54-)(B/2)

OPTION
KCT-12A
KCT-12B
KCT-12C

(X46-3110-20)

CONTROL
UNIT
(X57-37XX-XX)
(A/4)

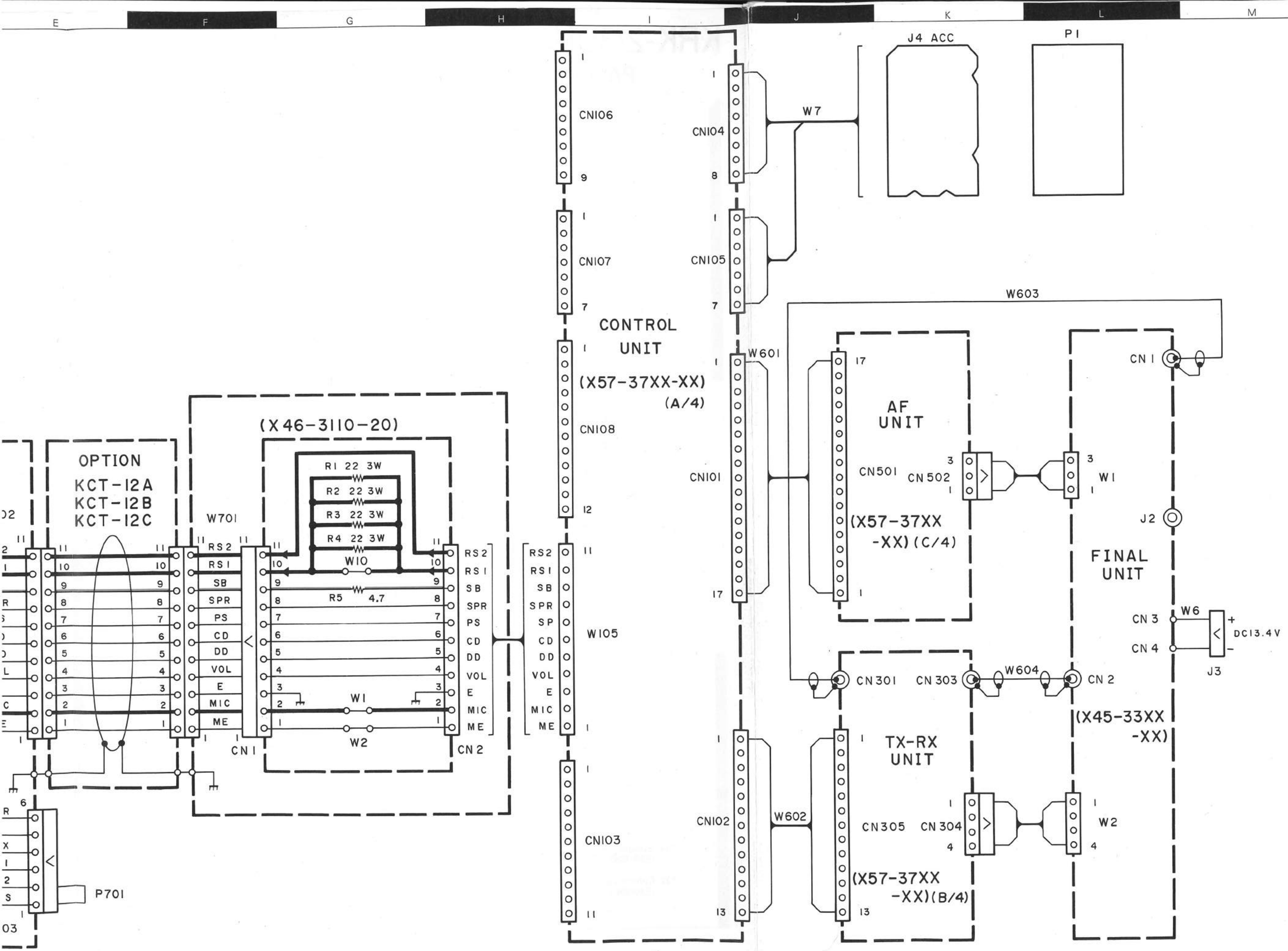
CONTROL UNIT
(X57-37XX-XX)
(A/4)
CN106
CN104
CN107
CN105
CN108
CN101
CN103
CN102
W7
W601
W105
W602
J4 ACC
P1
W603
AF UNIT
(X57-37XX -XX)(C/4)
CN501
CN502
W1
CN1
J2
FINAL UNIT
CN3
CN4
W6
DC13.4V
J3
CN301
CN303
W604
CN2
(X45-33XX -XX)
TX-RX UNIT
CN305
CN304
W2
(X57-37XX -XX)(B/4)
(X46-3110-20)
OPTION
KCT-12A
KCT-12B
KCT-12C
W701
R1 22 3W
R2 22 3W
R3 22 3W
R4 22 3W
W10
R5 4.7
W1
W2
RS2
RS1
SB
SPR
PS
CD
DD
VOL
E
MIC
ME
SP
CN1
CN2
P701

PC BOARD VIEWS KRK-2

INTERFACE UNIT : X46-3110-20

Component side view

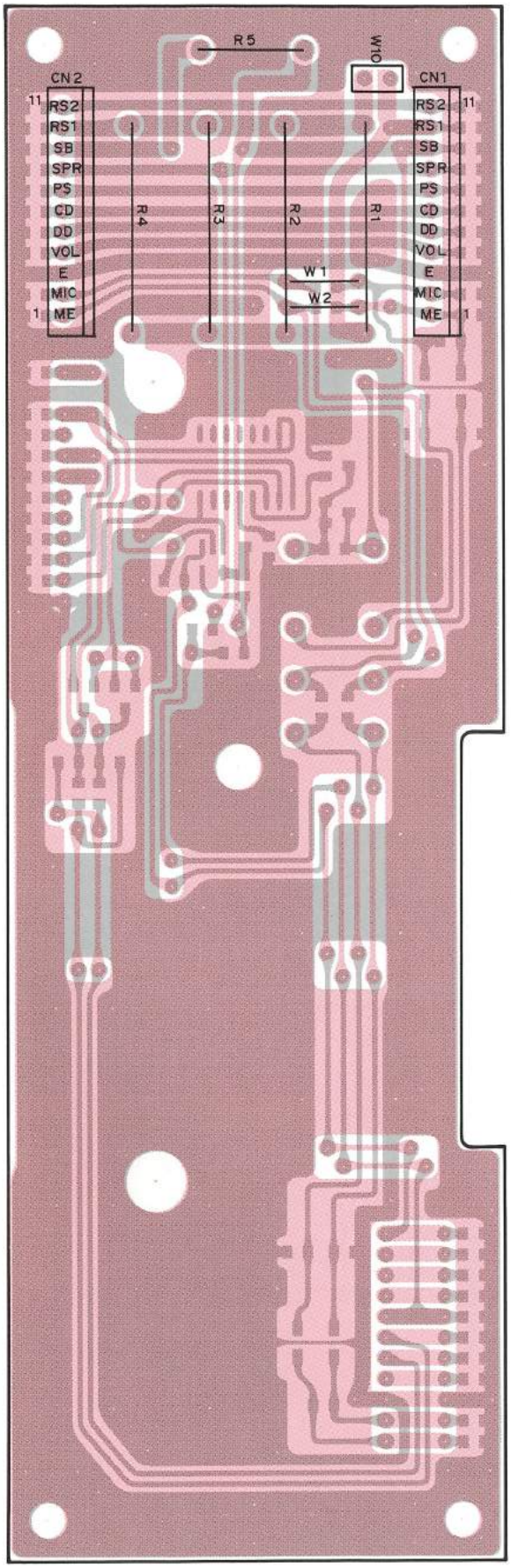

INTERFACE UNIT : X46-3110-20

Foil side view

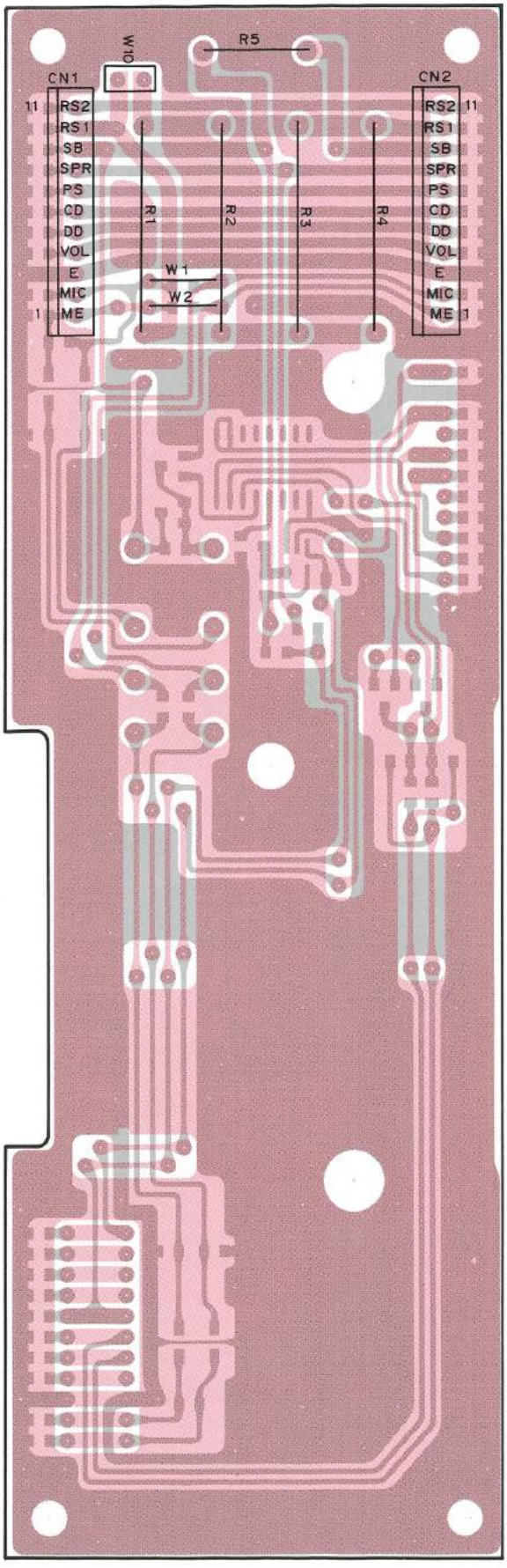

: Component side
: Foil side

KRK-3DH PC BOARD VIEWS

INTERFACE UNIT : X46-3090-20

Component side view

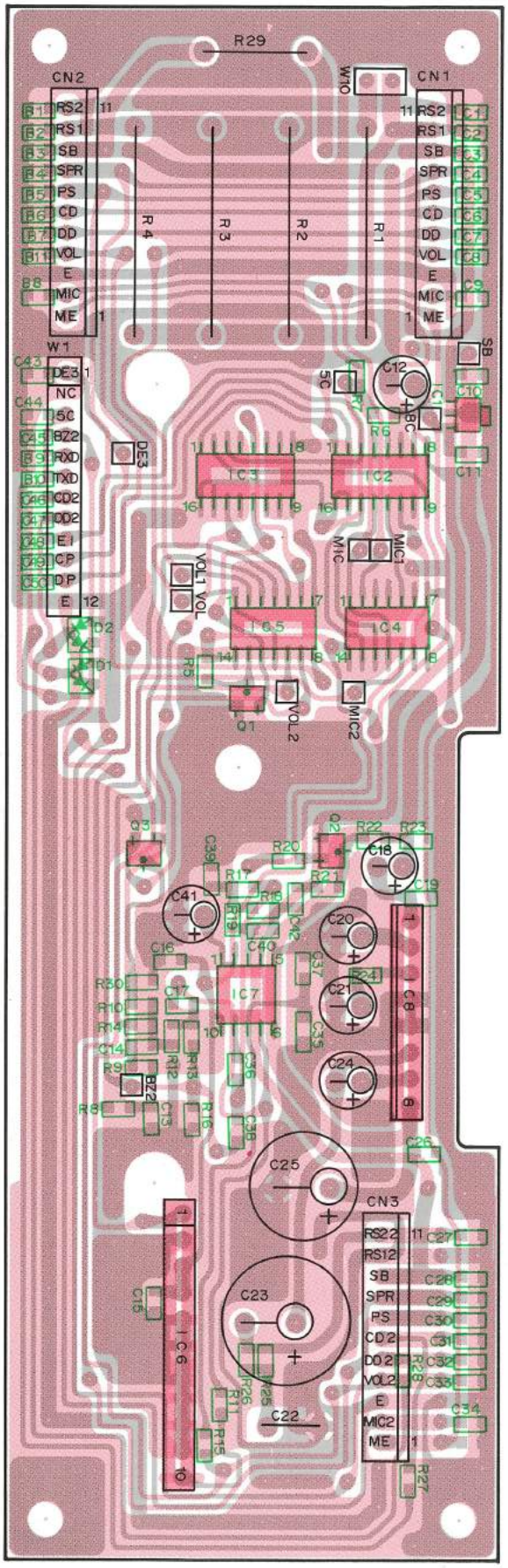

INTERFACE UNIT : X46-3090-20

Foil side view

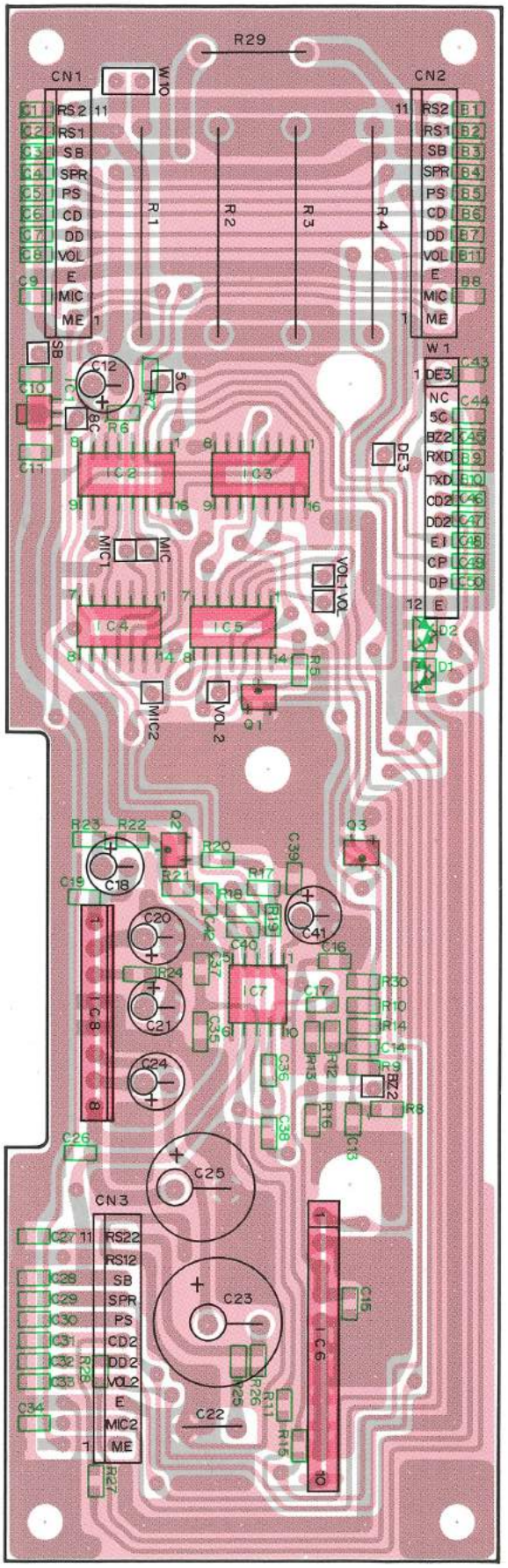

: Component side

: Foil side

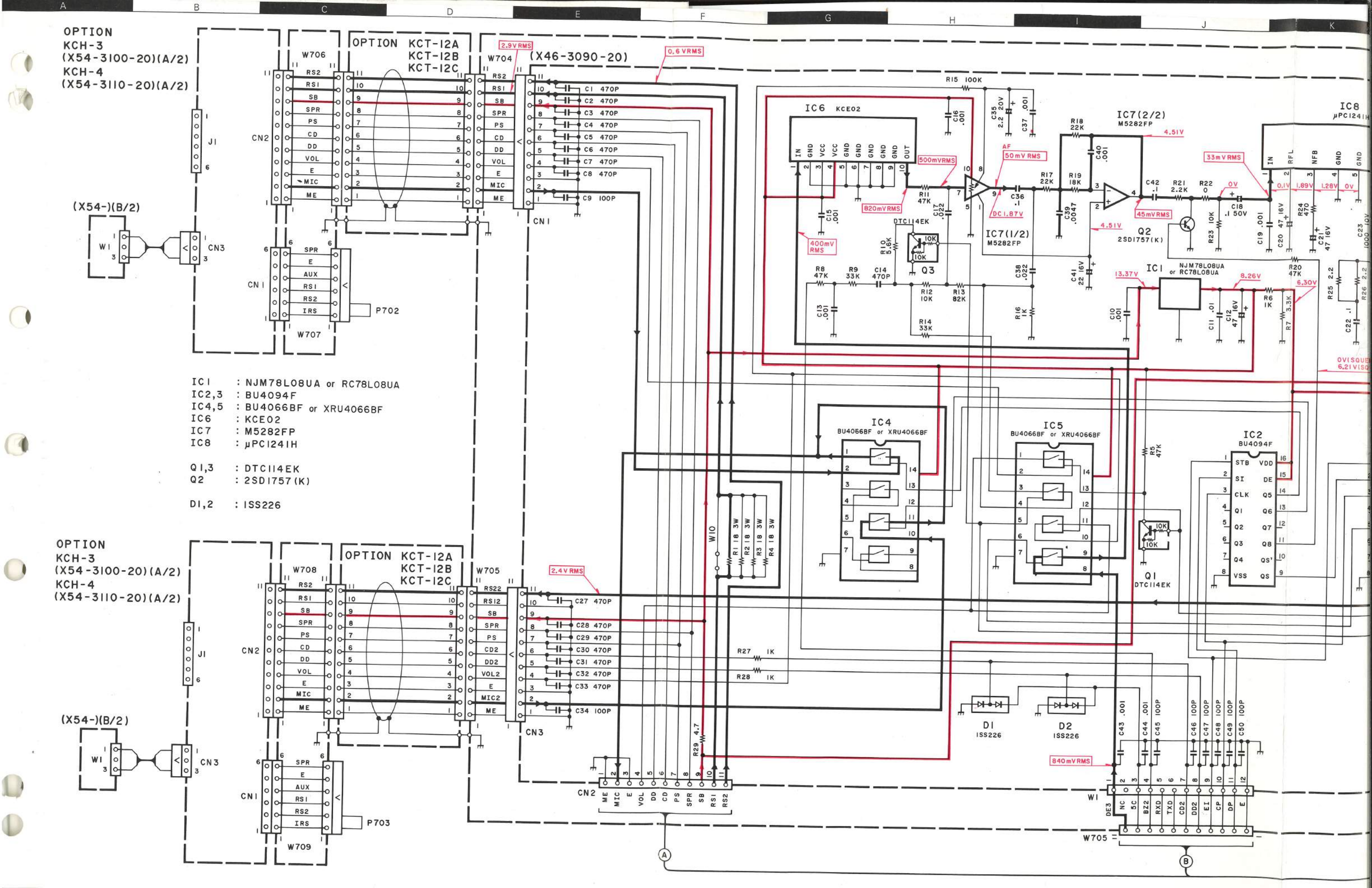
OPTION
KCH-3
(X54-3100-20)(A/2)
KCH-4
(X54-3110-20)(A/2)
OPTION KCT-12A
KCT-12B
KCT-12C
(X46-3090-20)
(X54-)(B/2)
IC1 : NJM78L08UA or RC78L08UA
IC2,3 : BU4094F
IC4,5 : BU4066BF or XRU4066BF
IC6 : KCE02
IC7 : M5282FP
IC8 : μPC1241H
Q1,3 : DTC114EK
Q2 : 2SD1757(K)
D1,2 : 1SS226
IC6 KCE02
IC7(2/2) M5282FP
IC7(1/2) M5282FP
IC8 μPC1241H
IC1 NJM78L08UA or RC78L08UA
IC4 BU4066BF or XRU4066BF
IC5 BU4066BF or XRU4066BF
IC2 BU4094F
Q1 DTC114EK
Q2 2SD1757(K)
Q3 DTC114EK
D1 1SS226
D2 1SS226
2.9V RMS
0.6 VRMS
2.4V RMS
500mVRMS
820mVRMS
400mV RMS
50mV RMS
45mVRMS
33mV RMS
840mV RMS
4.51V
13.37V
8.26V
6.30V
0V(SQUE
6.21V(SQ
W706
W707
W704
W708
W709
W705
W10
P702
P703
J1
CN1
CN2
CN3
W1

SCHEMATIC DIAGRAM KRK-3DH

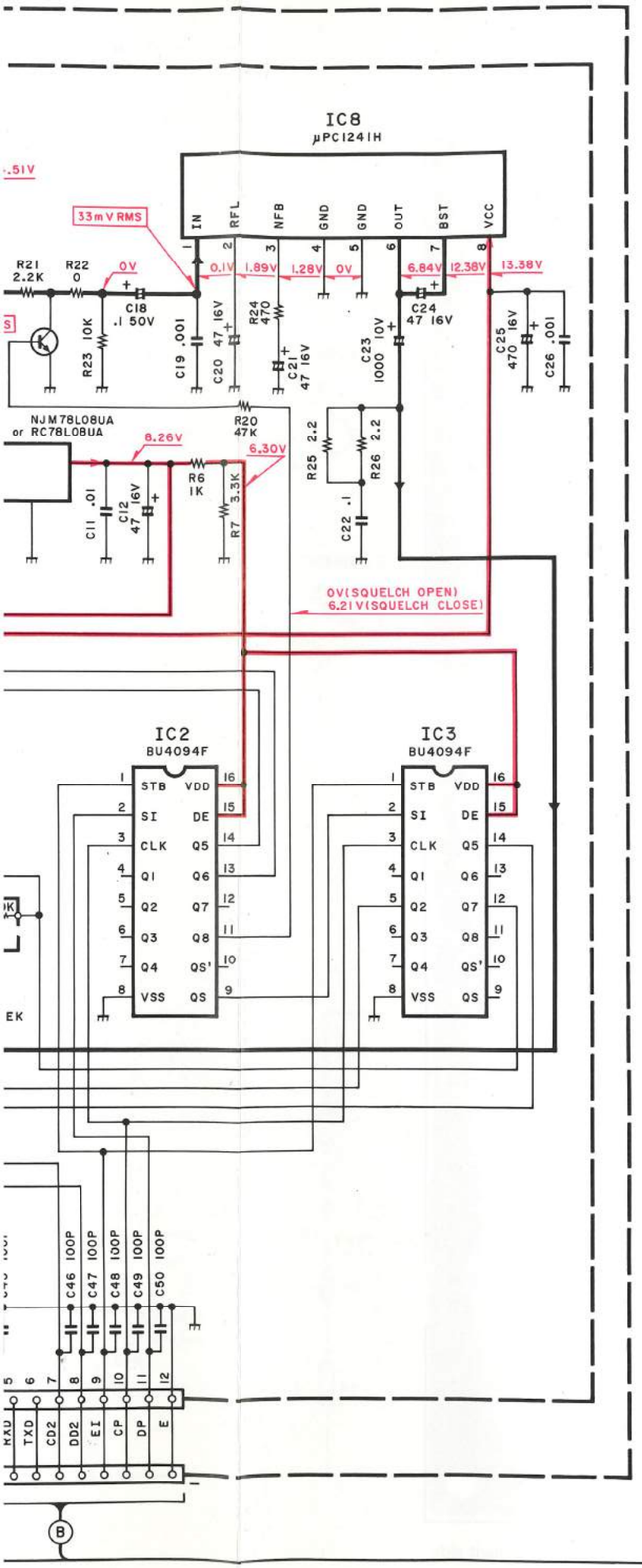

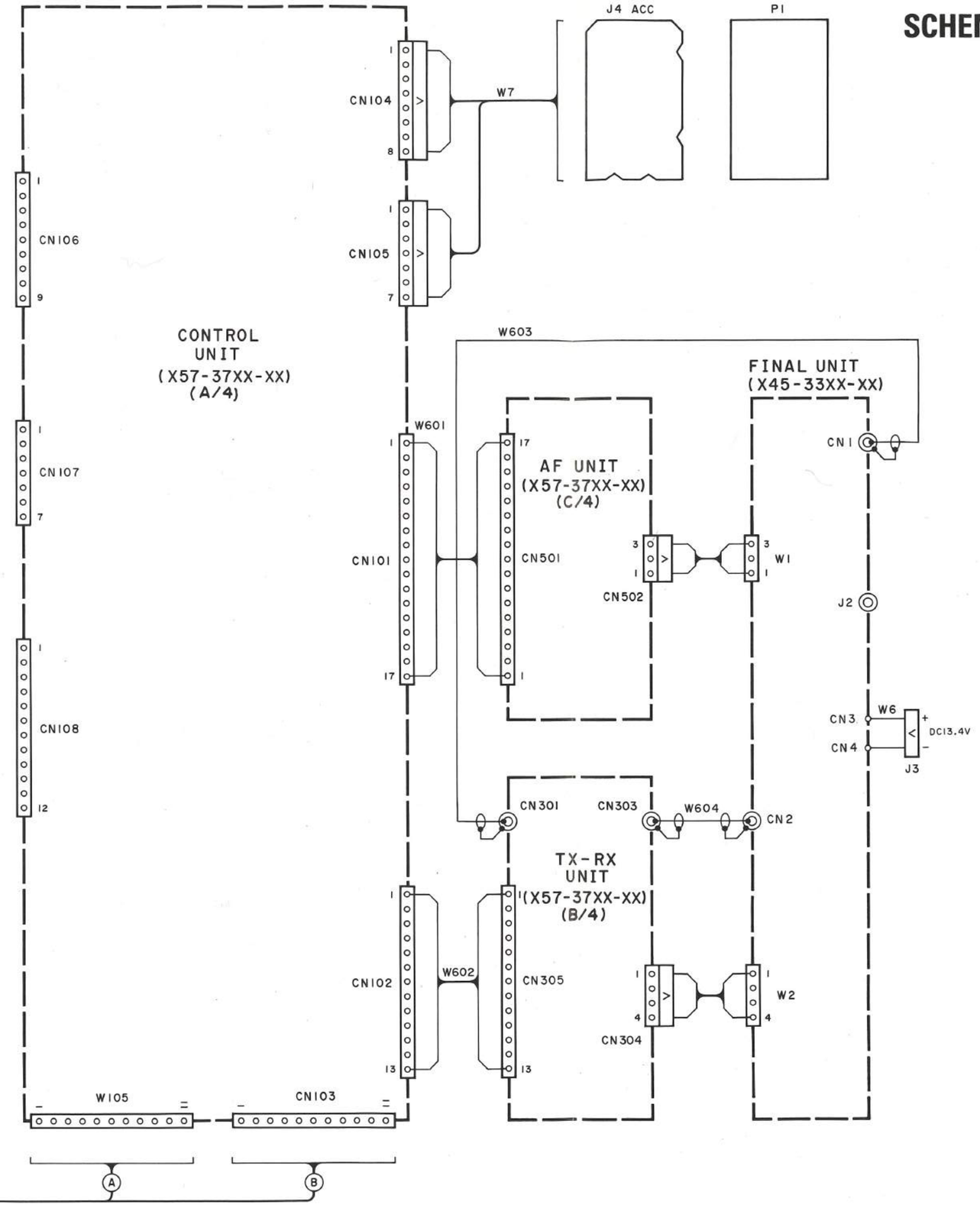

DTC114EK
2SD1757K

M5282FP

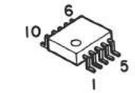

NJM78L08UA

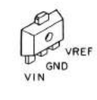

μPC1241H

BU4066BF

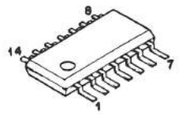

BU4094BF

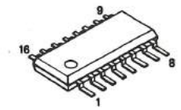

KRK-4DB PC BOARD VIEWS / SCHEMATIC DIAGRAM

INTERFACE UNIT : X46-3100-20 (A/2)

Component side view

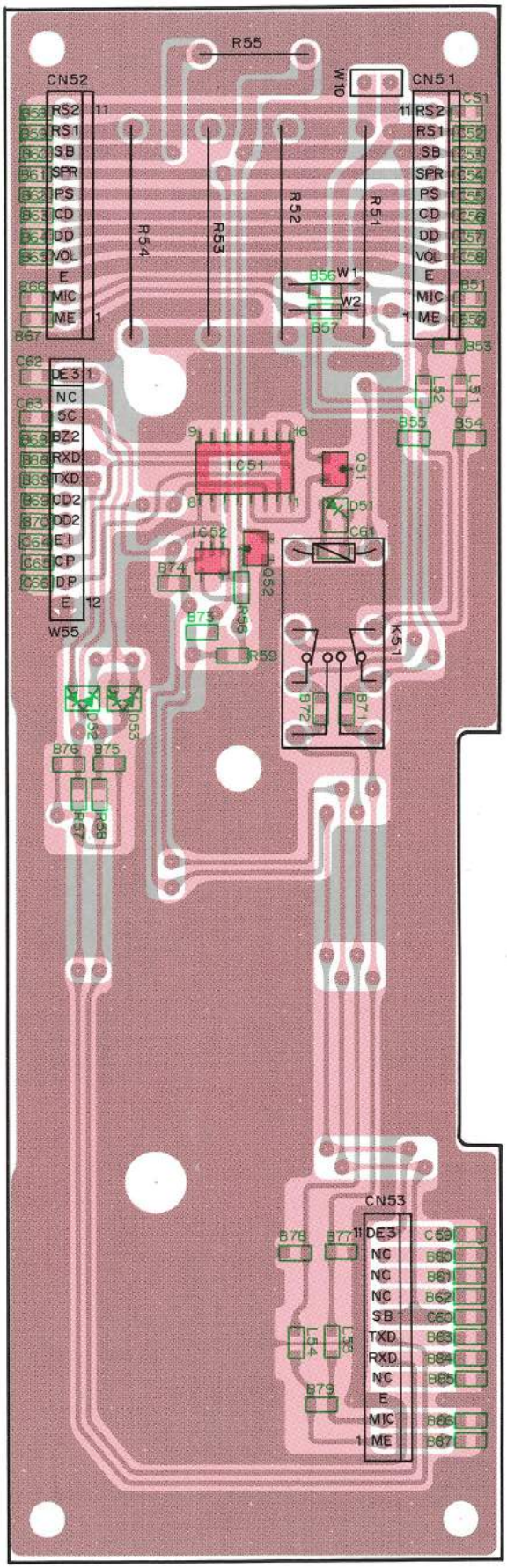

INTERFACE UNIT : X46-3100-20 (A/2)

Foil side view

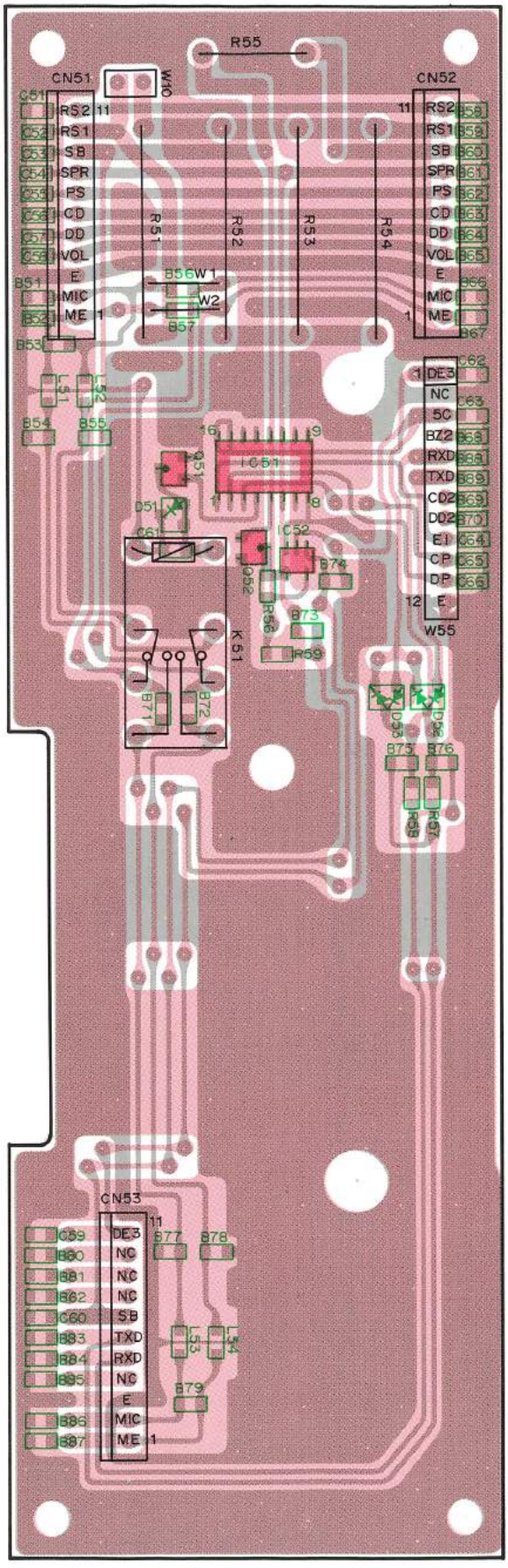

INTERFACE UNIT : X46-3100-20 (B/2)

Component side view

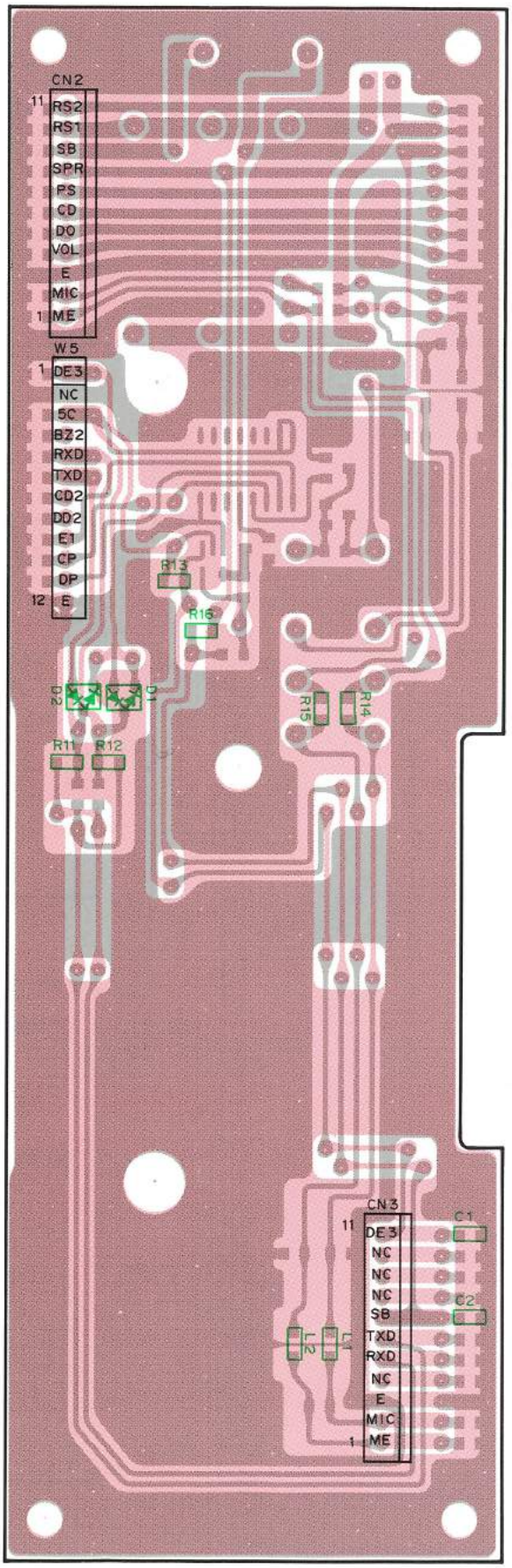

INTERFACE UNIT : X46-3100-20 (B/2)

Foil side view

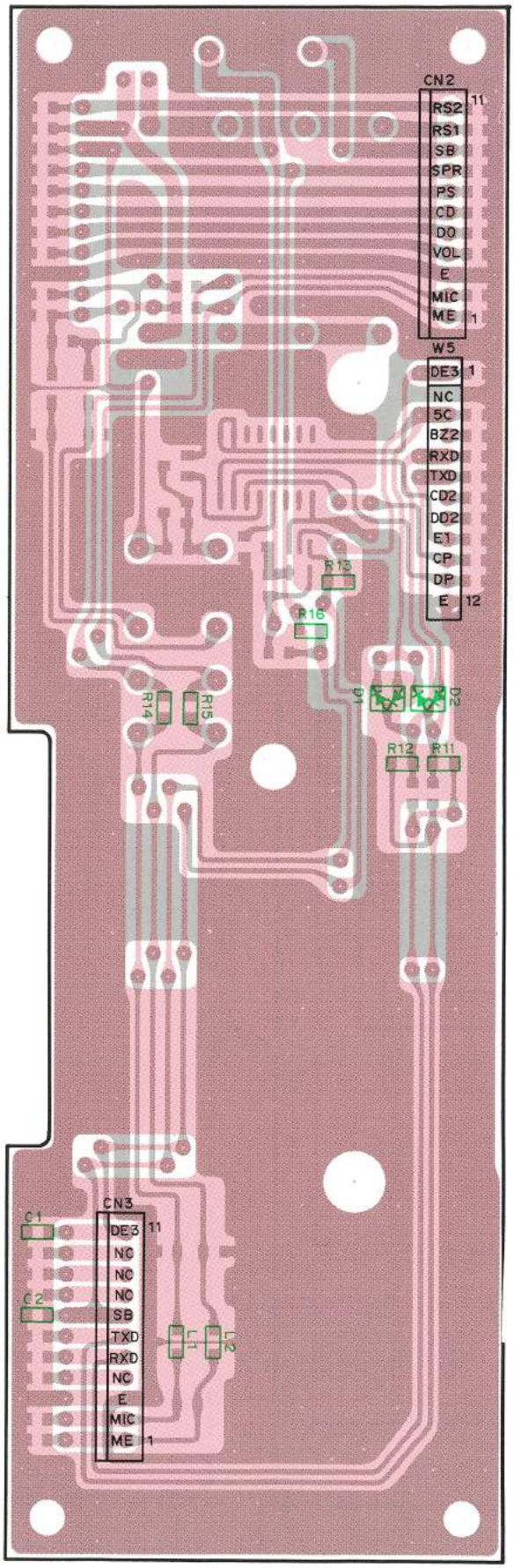

DTD114EK

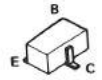

TC4S66F

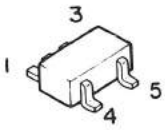

BU4094BF

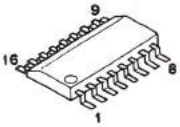

: Component side

: Foil side

OPTION
KCH-3
(X54-3
KCH-4
(X54-3

D114EK

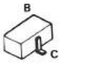

4S66F

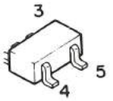

094BF

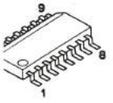

OPTION
KCH-3
(X54-3100-20)(A/2)
KCH-4
(X54-3110-20)(A/2)

OPTION KCT-12A
KCT-12B
KCT-12C

(X54-)(B/2)

(X46-3100-20)(A/2)

(X46-3100-20)(B/2)

IC51 : BU4094BF
IC52 : TC4S66F

Q51 : DTDII4EK
Q52 : DTCII4EK

D1,2,52,53 : ISS226
D51 : ISS193

RADIO 2 PTT ON : 4.88V OTHERS : 0V

RADIO BUSY : 0V OTHERS : 4.88V

RADIO 2 PTT ON : 0V OTHERS : 12.6V

RADIO BUSY : 12.55V OTHERS : 0V

13.2V

12.61V

5.05V

TO RADIO

CONTROL UNIT (RADIO 1) (X57-37XX-XX) (A/4)

CONTROL UNIT (RADIO 2) (X57-37XX-XX) (A/4)

AF UNIT (X57-37XX-XX) (C/4)

TX-RX UNIT (X57-37XX-XX) (B/4)

FINAL UNIT (X45-33XX-XX)

DC13.4V

KRK-2/3DH/4DB

KENWOOD CORPORATION
Shinonogi Shibuya Building, 17-5, 2-chome Shibuya, Shibuya-ku, Tokyo 150, Japan

KENWOOD U.S.A. CORPORATION
COMMUNICATIONS & TEST EQUIPMENT GROUP
P.O. BOX 22745, 2201 East Dominguez St., Long Beach, CA 90801-5745, U.S.A.

KENWOOD ELECTRONICS DEUTSCHLAND GMBH
Rembrücker Str. 15, 6056 Heusenstamm, Germany

TRIO-KENWOOD U.K. LIMITED
KENWOOD House, Dwight Road, Watford, Herts., WD1 8EB United Kingdom

KENWOOD ELECTRONICS BENELUX N.V.
Mechelsesteenweg 418 B-1930 Zaventem, Belgium

TRIO-KENWOOD FRANCE S.A.
13, Boulevard Ney, 75018 Paris, France

KENWOOD LINEAR S.P.A.
20125, Milano-via Arbe, 50, Italy

KENWOOD ELECTRONICS AUSTRALIA PTY. LTD.
P.O. Box 504, 8 Figtree Drive, Australia Centre, Homebush, N.S.W. 2140, Australia

KENWOOD & LEE ELECTRONICS, LTD.
Wang Kee Building, 5th Floor, 34-37, Connaught Road, Central, Hong Kong

KENWOOD ELECTRONICS CANADA INC.
6070 Kestrel Road, Mississauga, Ontario, Canada L5T 1S8