KENWOOD

SERVICE MANUAL

TH-41A/AT/E BT-2, DC-21, EB-2, PB-21, SC-8/8T, SMC-30, HMC-1, TU-6

70cm FM HAND-HELD TRANSCEIVER

Photograph shows TH-41AT type.

CONTENTS

CIRCUIT DESCRIPTION

Model	Destination	Frequency range (MHz)	RPT-SHIFT Freq' (MHz)	TONE	Ref'
TH-41A	K1, M1	440.00 – 449.995	±5	Option (TU-6)	
	M2, X	430.00 – 439.995			
TH-41AT	K2, M3	440.00 – 449.995			DTMF system used
	M4	430.00 – 439.995			
TH-41E	T	430.00 – 439.995	+1.6/REV	1750Hz TONE BURST	TRIO Brand
	W		−7.6/−1.6	1750Hz TONE	

K : U.S.A. M : Gen. T : England W : Europe X : Australia/Newzealand

Table 1 Destination chart

RX Section

The TH-41 Transceiver uses a superheterodyne receiver section. The first IF is 21.6MHz and the second IF is 455kHz. Ceramic filters are used in both IF's.

A received signal is RF amplified by Q1 and Q2 2SC2171H and filtered by BPF (Band Pass Filter) L6–L9. The BPF output is fed to first mixer Q3 : 2SC2671H where it is mixed with the first local oscillator Phase Locked Loop (PLL) output signal. The first mixer output passes through a 21.6MHz Monolithic Crystal Filter (MCF) become as the first IF signal. This signal is then amplified by Q4 : 2SC2714Y and applied to IF unit Q1 : MC3359P.

Item	Rating
Noninal center frequency (fo)	21.6MHz
Pass bandwidth	fo ± 7.5kHz or more at 3dB
Attenuation bandwidth	fo ± 25kHz or more at 18dB
Guaranteed attenuation	30dB or more within fo ±1MHz Spurious : 15dB or more at fo ~ fo +500kHz.
Ripple	0.5dB or less
Insertion loss	1.0dB or less
Terminal impedance	1.5kΩ/1.5pF

Table 2 MCF (L71-0247-05) (RF unit F1)

Item	Rating
Center frequency of 6dB bandwidth (fo)	455kHz ± 1.5kHz
6dB bandwidth	± 7.5kHz or more
40dB bandwidth	± 15kHz or less
Ripple	1.5dB or less (455 ± 5kHz)
Guaranteed attenuation	27dB or more within fo ± 100kHz
Insertion loss	6dB or less at 455kHz
Terminal impedance	1.5kΩ

Table 3 Ceramic filter (L72-0335-05) (IF unit F1)

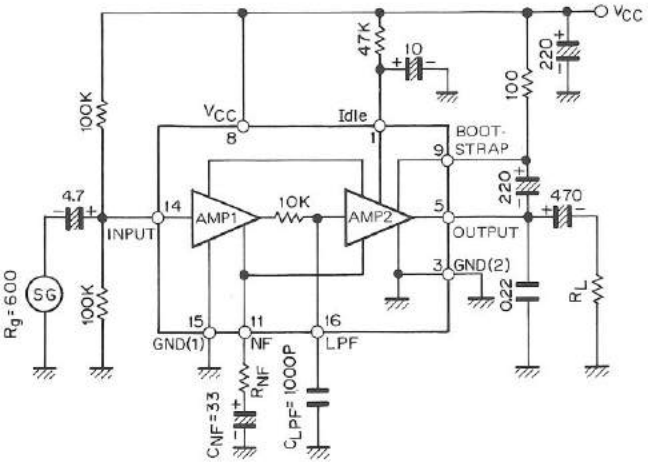

Fig. 1 TA7331F Block diagram (IF unit Q2)

IC Q1 contains the second mixer, second local oscillator, second IF amp and limiters, FM demodulator, squelch noise amp and associated control circuits.

The demodulated output from Q1 is first sent through the volume control VR1, and is then amplified by Q2 : TA7331F on the IF unit to drive the speaker.

Squelch rectifiers D1 and D2, which are external to Q1, detect the high frequency noise component from the demodulation output Q1. This signal is first applied to Q1 pin 12 via the squelch control VR2. The noise component input to pin 12 is amplified and output at pin 13. The output at pin 13 is rectified by D1 and D2 : 1N60A and fed to pin 14.

When rectified DC voltage is applied to pin 14, the squelch trigger circuit functions, pin 16 is grounded and Q4 : 2SC2412K and Q3 : 2SB698(E,F) turn off. When Q3 turns off, power to the AF amplifier IC : TA7331F is therefore audio output is off.

When a signal (carrier) is received, the noise normally present at the demodulator output is reduced and the squelch trigger circuit does not function. Therefore, Q4 and Q3 turn on, the AF IC is powered and audio output is available.

CIRCUIT DESCRIPTION

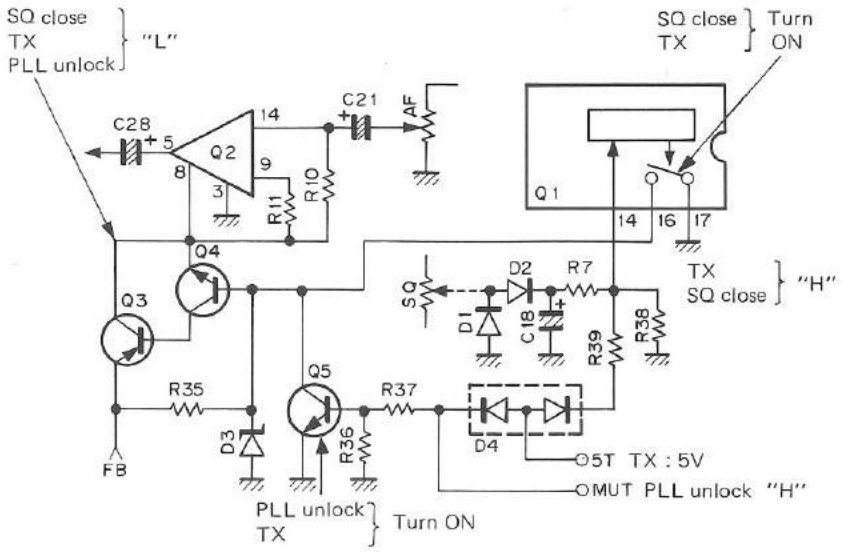

Fig. 2 Squelch-mute circuit

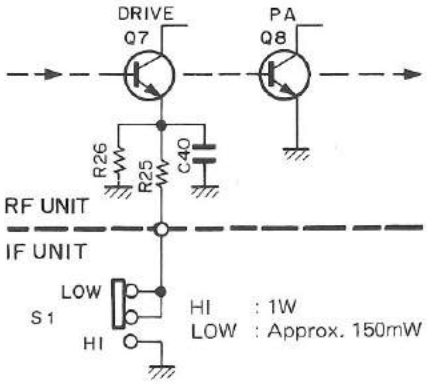

Fig. 3 Power select circuit

TX Section

The PLL VCO (Voltage Controlled Oscillator) frequency during transmission mode is 1/3 the actual transmitting frequency. The output of VCO buffer amp Q16 : 2SC2671H is tripled by Q5 : 2SC2671H and fed through BPF L11, L12 to obtain the final transmission frequency. The output from this BPF is fed to pre-driver Q6 : 2SC2671H and driver Q7 : 2SC3019 and is final amplified Q8 : 2SC2671H.

	VCBO	VEBO	VCEO	IC	PC	PC	Tj	Tstg	Ta
Test Conditions			RBE = ∞ Ω		Tc = 25°C				25 ± 3°C
Maximum Rating	35V	4V	17V	1A	10W		+175°C	−55 ~ +175°C	

Table 4 2SC3101 Max. rating (RF unit Q8)

The signals from either the microphone or AF circuits are amplified by mic amp Q6 : NJM4558M and this signal is applied to D14 : 1S2208 in the VCO circuit as modulation. Transmitter section peripheral circuit consist of the power output level selector circuit and generator circuit.

To select the power output level emitter resistor R25 (2.2Ω) for driver Q7 is controlled by Hi/Low switch S1 on IF unit. When R25 is grounded, the output power is about 1W. When R25 is opened, the output power becomes about 150mW (through R24, 26Ω).

The tone circuit is an oscillator circuit for repeater access. The system differs according to country.

1) In the AT model type, a DTMF (Dual-Tone Multi Frequency) system is used. When any key is depressed, the unit enters mode with DTMF modulation.
2) In the **E** model type ("**W**" for continental European countries), when momentary tone switch is pressed, the unit enters transmission mode and a 1750Hz tone signal is output as modulation.
3) In the **E** model type ("**T**" for the United Kingdom), when the tone switch is pressed, the unit enters transmission mode and a 1750Hz tone signal is output only at the beginning of each transmission.

An optional PROGRAMABLE TONE ENCODER unit TU-6 can be installed in the A and AT model types. With a TU-6 tone encoder installed, one of 37 standard EIA Tone frequencies between 67.00 and 250.3Hz can be output. When the tone switch is on, the pre-programmed tone frequency is continuously output along with any voice or DTMF modulation.

CIRCUIT DESCRIPTION

PLL Circuit

In the reception mode, the VCO operates at a frequency of 1/3 of the first local oscillator (139.4666–142.798333MHz [**K,M1,M2** : 440.000–449.995MHz] 136.1333–139.4650 MHz [**M2,M4,T,W,X** : 430.000–439.995MHz]). During reception, D13 turns ON to connect C105 into the oscillator circuit, which causes the oscillation frequency of the VCO to drop. In transmission mode, the VCO operates at a frequency of 1/3 the transmission frequency (146.666–149.99833MHz [**K,M1,M2** : 440.000–449.995MHz] 143.3333–146.6650MHz [**M2,M4,T,W,X** : 430.000–439.995MHz]).The VCO output is amplified by Q15 : 2SC2714(Y) and mixed with the HET oscillator output at PLL mixer Q10 : 2SC2668(Y).

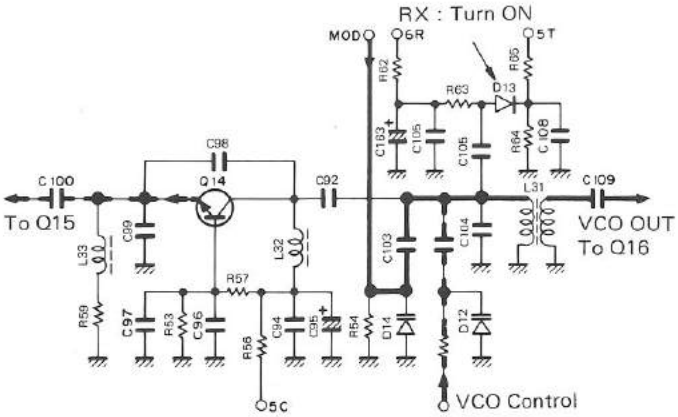

Fig. 4 VCO circuit

The HET oscillator Q9 : 2SC3121 outputs the crystal frequency as selected by the OFF-SET switch. The output from Q9 passes through BPF L26 and L27 and is now tripled the original crystal frequency.

PLL mixer Q10 output next passes through an Low Pass Filter (LPF) to obtain 3.333–6.6633MHz signal. This is amplified by Q11 : 2SC2668Y and input to programmable counter Q3 : TC9122P. The signal input to Q11 is divided by 1/1000 at 440.00MHz **K,M1,M2** (430.00MHz **M2,M4,T,W,X**) and 1/999 at 449.99MHz **K,M1,M2** (439.99MHz **M2,M4,T,W,X**) with the divide ratio being determined by the thumb-wheel frequency selector switch (S2). Q3 output is compared with the comparator reference signal (3.3...kHz) by phase comparator Q13 : TC5081AP. The 6.8266MHz crystal oscillator standard is divided by 1/2048 by Q12 : TC5082P to obtain the reference frequency output.

The DC output from phase comparator Q13 is fed through passive Loop Filter (LPF) and fed to D12 : 1S2208 in the VCO circuit to control the VCO frequency.

PLL circuits peripheral circuits are the +5kHz shift circuit and the unlock detect circuit. The +5kHz shift circuit is used to obtain a 5kHz step for both TX and RX frequencies. When 5K switch S3 is off, D4–D7 in the PLL HET oscillator circuit are on and the TC12–TC15 and C155–C158 are shorted circuit. When the 5K switch is on, the diodes turn off and trimmers TC12–TC15 and capacitors C155–C158 are series connected to their crystals. When the capacitors are connected in series to the crystals, the oscillator frequency increases. The trimmers are now used to adjust the frequency +5kHz.

The unlock circuit will be described in the following Control circuits section.

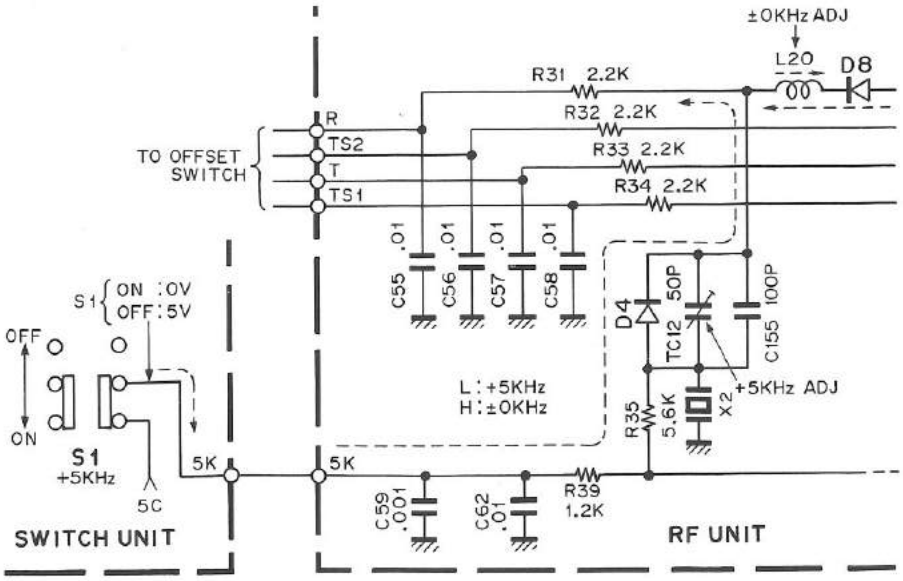

Fig. 5 +5kHz shift circuit (RX simplex mode)

CIRCUIT DESCRIPTION

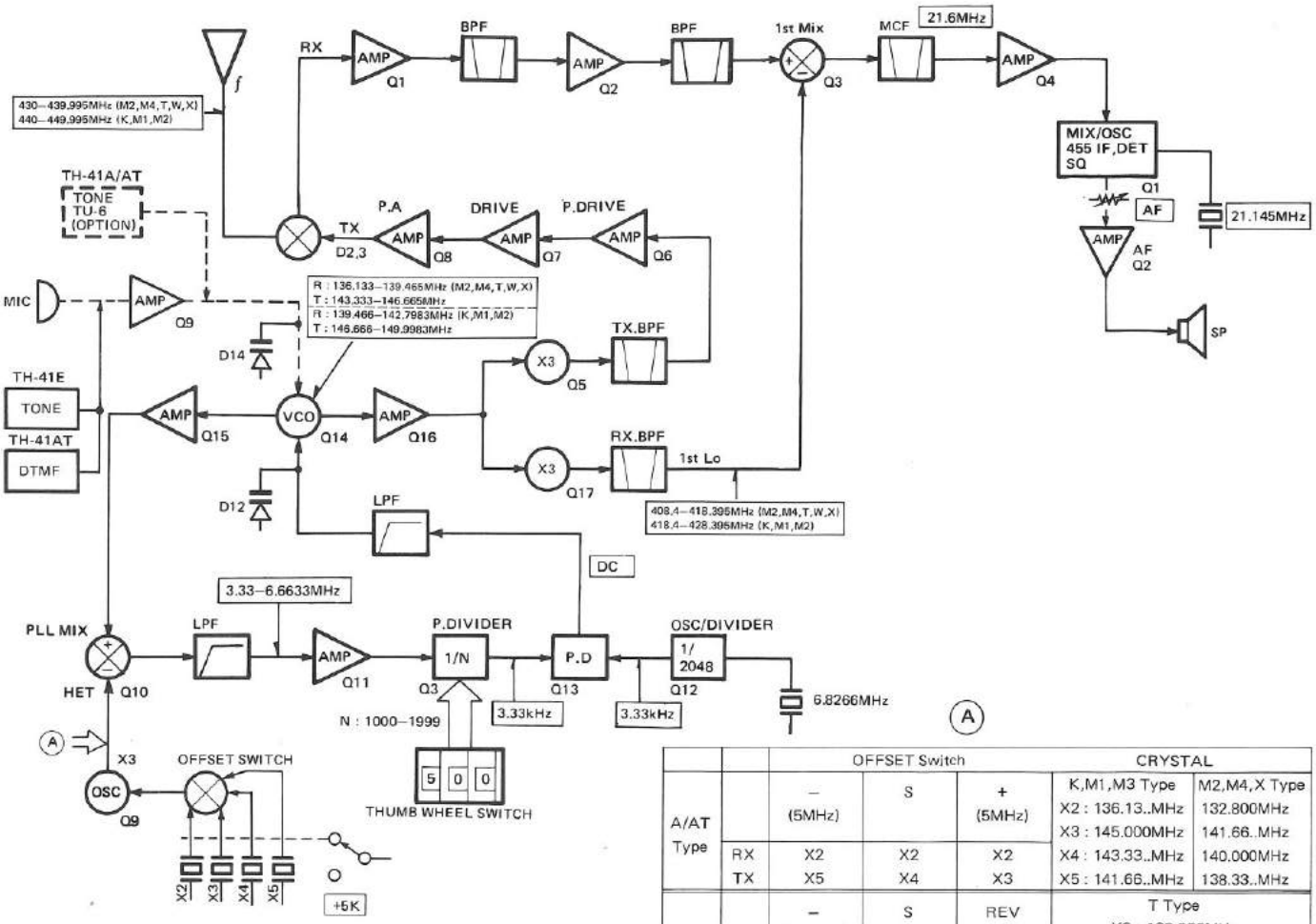

Fig. 6 Frequency configuration

		OFFSET Switch			CRYSTAL	
		– (5MHz)	S	+ (5MHz)	K,M1,M3 Type	M2,M4,X Type
A/AT Type					X2 : 136.13..MHz	132.800MHz
					X3 : 145.000MHz	141.66..MHz
	RX	X2	X2	X2	X4 : 143.33..MHz	140.000MHz
	TX	X5	X4	X3	X5 : 141.66..MHz	138.33..MHz
E (T) Type		– (1.6MHz)	S	REV	T Type	
					X2 : 132.800MHz	
					X3 : 133.33..MHz	
	RX	X2	X2	X3	X4 : 140.000MHz	
	TX	X5	X4	X4	X5 : 140.53..MHz	
E (W) Type		D-A (–7.6MHz)	S	D-B (–1.6MHz)	W Type	
					X2 : 132.800MHz	
					X3 : 139.46..MHz	
	RX	X2	X2	X2	X4 : 140.000MHz	
	TX	X5	X4	X3	X5 : 137.46..MHz	

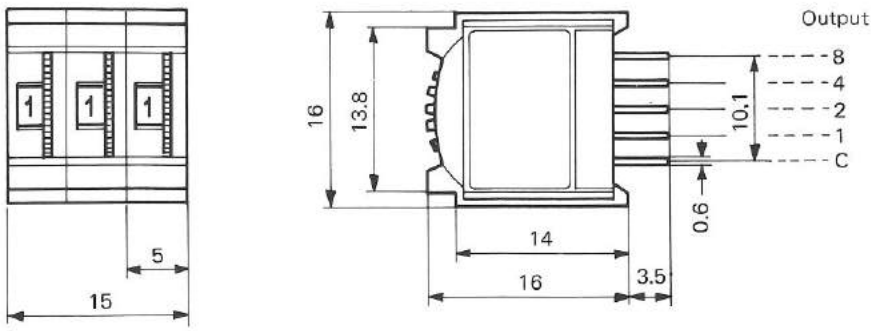

Dial \ Output	8	4	2	1
0				
1				•
2			•	
3			•	•
4		•		
5		•		•
6		•	•	
7		•	•	•
8	•			
9	•			•

• : Connect to the common pin

Fig. 7 Thumb wheel switch (S59-3401-05) (Switch unit S2)

CIRCUIT DESCRIPTION

Control Circuits

In the regulators and PTT controls control circuit, a 5C (5V always present, or Common) DC source is obtained from regulator Q19 : LVC517. The 5C source is supplied in both TX and RX modes and is also used as a reference voltage for the 6R (6V RX only), 5T (5V TX only) and AVR's (Automatic Voltage Regulators).

The 6R output from Q20 : 2SC1037K is supplied to the reception section and the 5T output from Q18 is supplied to the transmitter section.

When the PTT switch is depressed, Q7 : 2SA1037K and Q8 : 2SA2412K turn on and the TC line is grounded to place the unit in the TX mode.

	TC	Q23	Q26	Q22	Q24	6R	5T
RX	H	ON	OFF	ON	OFF	O	X
TX	L	OFF	ON	OFF	ON	X	O

Table 5 Function of power supply circuit

- PLL unlock circuit (If the PLL becomes unlocked for any reason), an unlock "H" signal is output from Q13 : TC5081AP pin 1. This unlock signal passes through D15 : MA152WA/2 to control Q23 and Q26 and forces into the reception mode.
  When the unlock signal is generated, "H" signal is fed to the MUT line through D15/2 to stop TX AF Output Muting.
- TX AF Output Muting
  In the transmission mode, the 5T signal is supplied to Q5 : 2SC2412K and Q1 : MC3359P via IF unit D4 : MA152WA to stop AF power output IC operation.

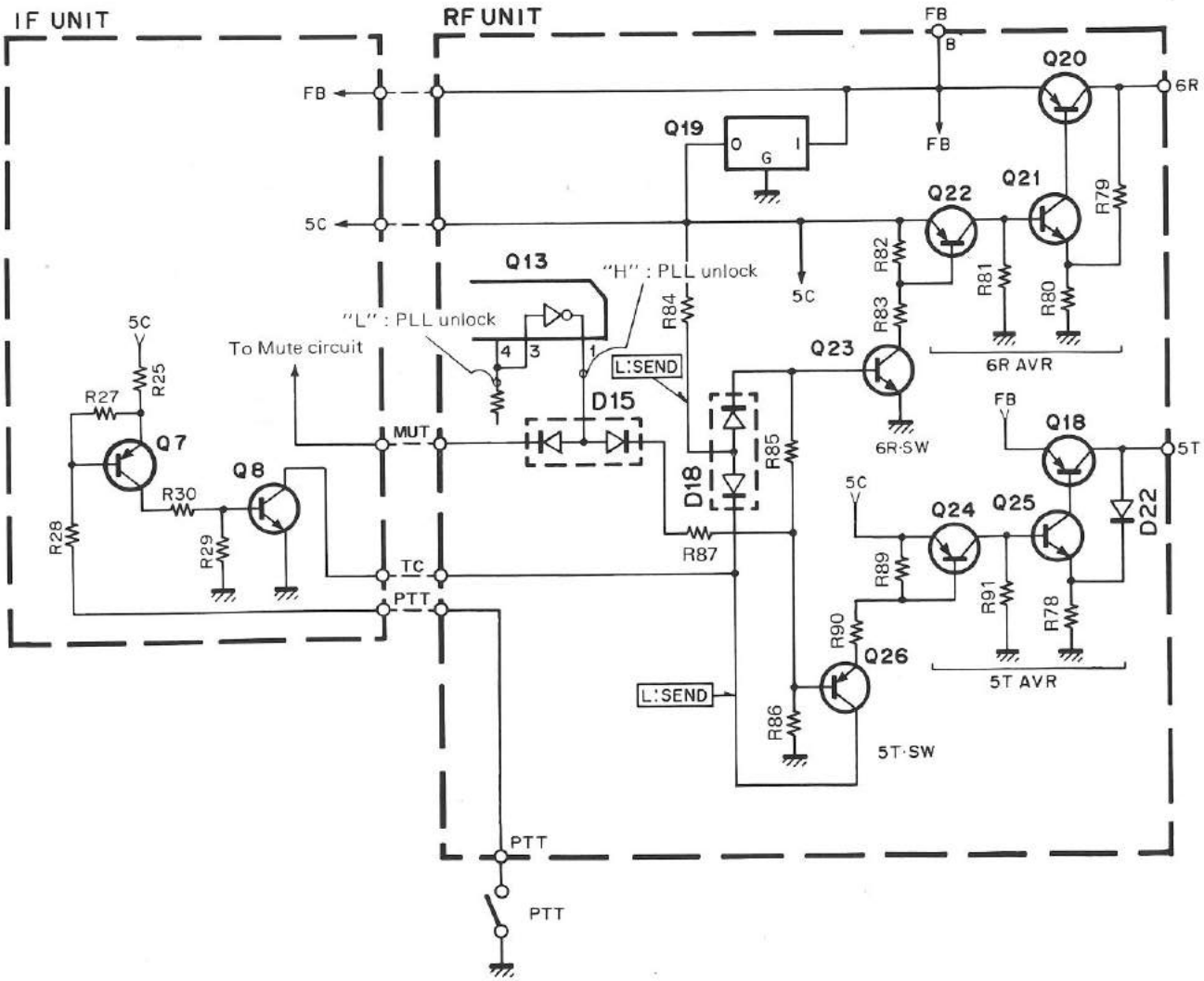

Fig. 8 Control circuit

CIRCUIT DESCRIPTION/PACKING

Parts No.	W09-0334-05	W09-0335-05	W09-0336-05	W09-0339-05
Input power	AC 120V 60Hz 3W or less	AC 220V 50/60Hz 3W or less	AC 240V 50Hz 3W or less	AC 240V 50/60Hz 3W or less
Output	DC 8.7V 32mA at 0mA/13.5V or less			
Weight	Approx. 120g	Approx. 210g		
Destination	U.S.A	Europe/Gen. M1–4	United Kingdom	Australia/ Newzealand
Ref'			TRIO Brand	

Table 6 Charger specifications

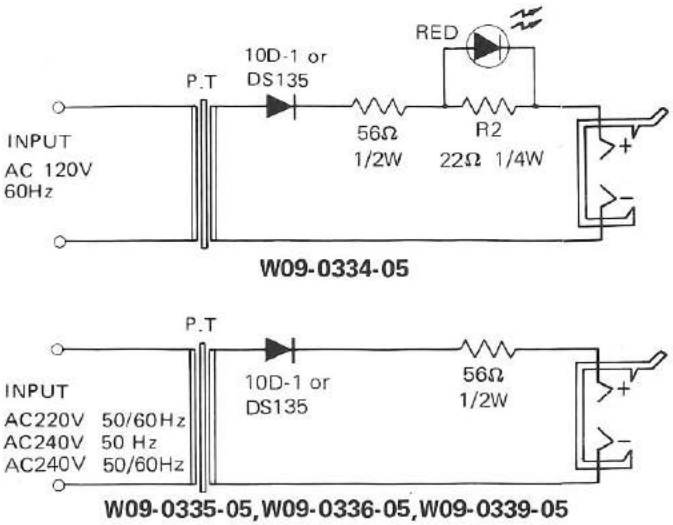

Fig. 9 Charger schematic diagram

PACKING

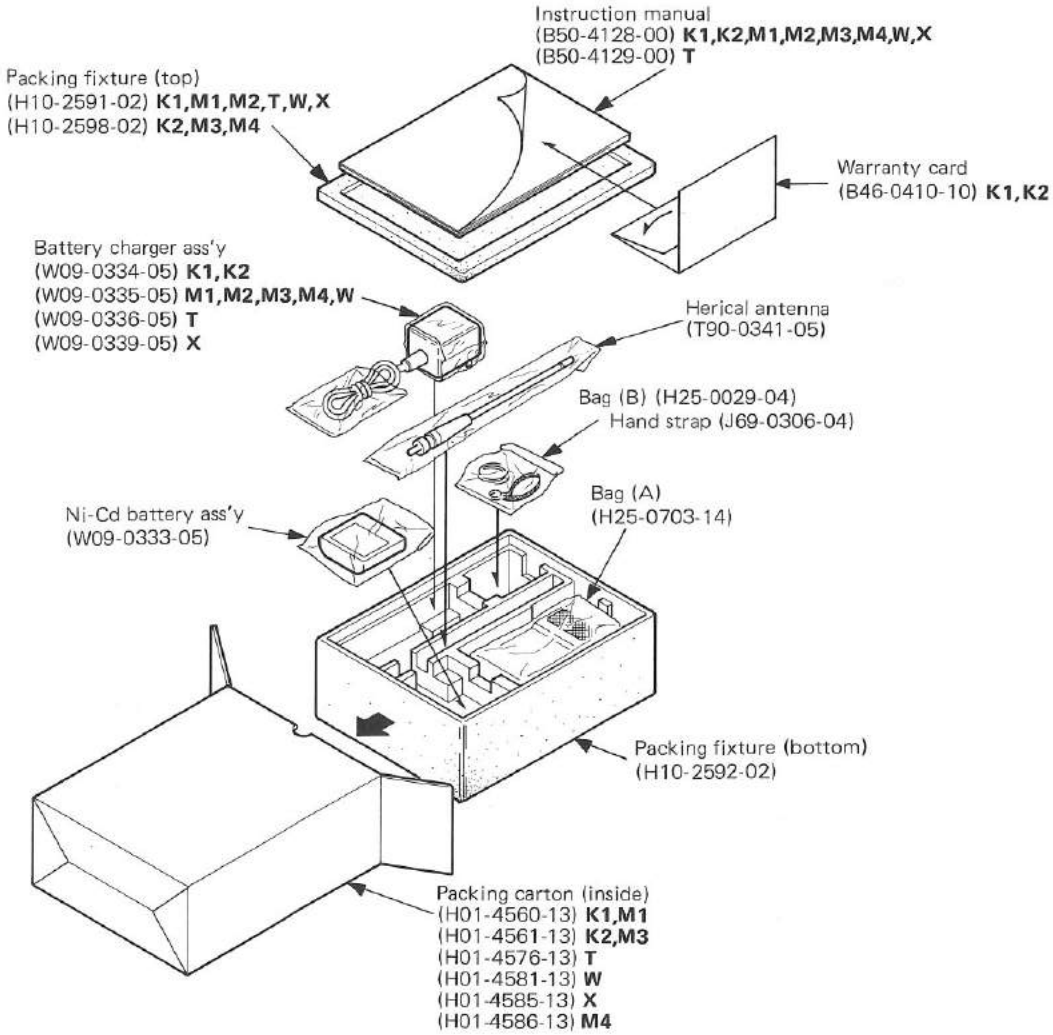

PARTS LIST

CAPACITORS CC 45 TH 1H 220 J
1 2 3 4 5 6

1 = Type ..... ceramic, electrolyic, etc.
2 = Shape .....round, square, etc.
3 = Temp. coefficient
4 = Voltage rating
5 = Value
6 = Tolerance

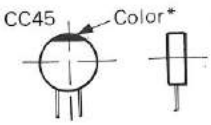

- **Capacitor value**

0 1 0 = 1pF
1 0 0 = 10pF
1 0 1 = 100pF
1 0 2 = 1000pF = 0.001μF
1 0 3 = 0.01μF

2 2 0 = 22pF
1st number | Multiplier
2nd number

- **Temperature Coefficient**

1st Word	C	L	P	R	S	T	U
Color*	Black	Red	Orange	Yellow	Green	Blue	Violet
ppm/°C	0	−80	−150	−220	−330	−470	−750

2nd Word	G	H	J	K	L
ppm/°C	± 30	± 60	± 120	± 250	± 500

Example CC45TH = −470±60 ppm/°C

- **Tolerance**

Code	C	D	G	J	K	M	X	Z	P	No code
(%)	± 0.25	± 0.5	± 2	± 5	± 10	± 20	+ 40 −20	+ 80 −20	+ 100 −0	More than 10μF −10~+50 Less than 4.7μF −10~+75

Less than 10 pF

Code	B	C	D	F	G
(pF)	± 0.1	± 0.25	± 0.5	± 1	± 2

- **Rating voltage**

1st word \ 2nd word	A	B	C	D	E	F	G	H	J	K	V
0	1.0	1.25	1.6	2.0	2.5	3.15	4.0	5.0	6.3	8.0	–
1	10	12.5	16	20	25	31.5	40	50	63	80	35
2	100	125	160	200	250	315	400	500	630	800	–
3	1000	1250	1600	2000	2500	3150	4000	5000	6300	8000	–

- **Chip capacitors**

(EX) C C 7 3 F S L 1 H 0 0 0 J → Refer to the above table.
1 2 3 4 5 6 7
(Chip) (CH,RH,UJ,SL)

(EX) C K 7 3 F F 1 H 0 0 0 Z
1 2 3 4 5 6 7
(Chip) (B,F)

- **Chip resistor (Carbon)**

(EX) R D 7 3 E B 2 B 0 0 0 J
1 2 3 4 5 6 7
(Chip) (B,F)

- **Carbon resistor (Normal type)**

(EX) R D 1 4 B B 2 C 0 0 0 J
1 2 3 4 5 6 7

1 = Type ..... ceramic, electrolytic, etc.
2 = Shape ..... round, square, etc.
3 = Dimension
4 = Temp. coefficient
5 = Voltage rating
6 = Value
7 = Tolerance.

Dimension

Dimension code	L	W	T
Empty	5.6 ± 0.5	5.0 ± 0.5	Less than 2.0
E	3.2 ± 0.2	1.6 ± 0.2	Less than 1.25
F	2.0 ± 0.3	1.25 ± 0.2	Less than 1.25

Dimension

Dimension code	L	W	T	Wattage
E	3.2 ± 0.2	1.6 ± 0.2	0.57	2B
F	2.0 ± 0.3	1.25 ± 0.2	0.45	2A

Rating wattage

Cord	Wattage	Cord	Wattage	Cord	Wattage
2A	1 10W	2E	1 4W	3A	1W
2B	1 8W	2H	1 2W	3D	2W
2C	1 6W				

Dimension

Model	Destination	Switch unit	RF unit	IF unit	Tone unit	DTMF unit
TH-41A	K1, M1	X41-1590-12	X44-1640-11	X48-1410-12		
	M2, X		X44-1640-71	X48-1410-62		
TH-41AT	K2, M3	X41-1590-12	X44-1640-11	X48-1410-12		A09-0404-05
	M4		X44-1640-71	X48-1410-62		A09-0403-05
TH-41E	T	X41-1590-52	X44-1640-51	X48-1410-51	X41-1270-51	
	W	X41-1590-62	X44-1640-61	X48-1410-62	X41-1270-60	

TH-41A/AT/E GENERAL

N : New parts
* : Please note that parts are sometimes not in stock and it takes much time to deliver.

PART.NO	NOTE	NAME & DESCRIPTION	DISTINCTION & QUANTITY 011	012	021	022	023	024	051	061	071				REFERENCE.NO
A02-0676-02	N*	CASE(TOP) 440MHZ.KENWOOD	1		1										
A02-0673-02	N*	CASE(TOP) 430MHZ.KENWOOD				1									
A02-0674-02	N*	CASE(TOP) 430MHZ.TRIO							1						
A02-0673-02	N*	CASE(TOP) 430MHZ.KENWOOD								1	1				
A02-0676-02	N*	CASE(TOP) 440MHZ.KENWOOD			1										
A02-0703-01	N*	CASE(TOP) 440MHZ.KENWOOD		1			1								
A02-0704-01	N*	CASE(TOP) 430MHZ.KENWOOD						1							
A02-0675-02	*	CASE(BOTTOM)	1	1	1	1	1	1	1	1	1				
A09-0404-05	N*	CASE(TOP)ASS'Y * WITH DTMF		1			1								
A09-0403-05	N*	CASE(TOP)ASS'Y * WITH DTMF						1							
A09-0411-03	N*	CASE(TOP)ASS'Y 440MHZ.KENWOOD	1		1										
A09-0409-03	N*	CASE(TOP)ASS'Y 430MHZ.KENWOOD				1									
A09-0410-03	N*	CASE(TOP)ASS'Y 430MHZ.TRIO							1						
A09-0409-03	N*	CASE(TOP)ASS'Y 430MHZ.KENWOOD								1	1				
A21-0768-02	*	ORNAMENTAL PANEL	1	1	1	1	1	1	1	1	1				
B04-0408-04	*	SP METAL	1												
B04-0409-04	*	SP METAL		1											
B04-0408-04	*	SP METAL			1	1									
B04-0409-04	*	SP METAL					1	1							
B04-0408-04	*	SP METAL							1	1	1				
B05-0733-04	*	SP GRILE	1	1	1	1	1	1	1	1	1				
B40-3516-04	N*	MODEL NAME PLATE TH-41A	1												
B40-3536-04	N*	MODEL NAME PLATE TH-41AT		1											
B40-3516-04	N*	MODEL NAME PLATE TH-41A			1										
B40-3541-04	N*	MODEL NAME PLATE TH-41A				1									
B40-3536-04	N*	MODEL NAME PLATE TH-41AT					1								
B40-3542-04	N*	MODEL NAME PLATE TH-41AT						1							
B40-3537-04	N*	MODEL NAME PLATE TH-41E							1	1					
B40-3541-04	N*	MODEL NAME PLATE TH-41A									1				
B42-2345-04	N*	FCC PLATE	1												
B42-2360-04	N*	FCC PLATE		1											
B42-2345-04	N*	FCC PLATE			1	1									
B42-2360-04	N*	FCC PLATE					1	1							
B42-1745-04	*	SERIAL NO. LABEL	1	1	1	1	1	1	1	1	1				
B42-2366-04	*	PLATE HI/LO,- S +	1	1	1	1	1	1							
B42-2381-04	N*	PLATE HI/LO, + S REV							1						
B42-2380-04	N*	PLATE HI/LO,D-A S D-B								1					
B42-2366-04	*	PLATE HI/LO,- S +									1				
B42-2344-08	*	KEY BOARD PLATE		1			1	1							
B43-1026-04	N*	BADGE TH-41A	1												
B43-1030-04	N*	BADGE TH-41AT		1											
B43-1026-04	N*	BADGE TH-41A			1	1									
B43-1030-04	N*	BADGE TH-41AT					1	1							
B43-1033-04	N*	BADGE TH-41E							1	1					
B43-1026-04	N*	BADGE TH-41A									1				
B50-4128-00	N	INSTRUCTION MANUAL	1	1	1	1	1	1							
B50-4129-00	N	INSTRUCTION MANUAL							1						
B50-4128-00	N	INSTRUCTION MANUAL								1	1				
CC45SL1H560J		CERAMIC 56P 50V	1	1	1	1	1	1	1	1	1				C ,101
CC73FCH1H300J		CHIP CAP. 30P 50V		2			2	2							C , 6, 7
CE04CW0J100M		ELECTRO 10 6.3V		2			2	2							C , 2, 4
CE04CW1C4R7M		ELECTRO 4.7 16V		1			1	1							C , 5
CK73FB1E103K		CHIP CAP. 0.01 25V		2			2	2							C , 1, 3
E23-0432-04		TERMINAL FOR JUNCTION	2	2	2	2	2	2	2	2	2				

DISTINCTION

K1 - 011	K2 - 012
M1 - 021	M2 - 022
M3 - 023	M4 - 024
T - 051	W - 061
X - 071	

PARTS LIST

PART.NO	NOTE	NAME & DESCRIPTION	DISTINCTION & QUANTITY 011	012	021	022	023	024	051	061	071				REFERENCE.NO
E23-0458-04		TERMINAL (INSIDE)	2	2	2	2	2	2	2	2	2				
F10-1314-04	*	SHIELDING PLATE	1	1	1	1	1	1	1	1	1				
F19-0637-04	*	SWITCH MASK(A) HI/LO	1	1	1	1	1	1	1	1	1				
F19-0638-04	*	SWITCH MASK(B) OFFSET	1	1	1	1	1	1	1	1	1				
F20-0520-04	*	CUSHION(LITHIUM BATTERY TOP)	1	1	1	1	1	1	1	1	1				
F20-0538-04	*	INSULATING BOARD	1	1	1	1	1	1	1	1	1				
GL9PR24		LED RED	1	1	1	1	1	1	1	1	1				D ,101
G13-0626-04	*	CUSHION MIC	1	1	1	1	1	1	1	1	1				
G13-0802-04	*	CUSHION FOR JUNCTION	2	2	2	2	2	2	2	2	2				
G13-0803-04	*	CUSHION(B) FOR PTT	1	1	1	1	1	1	1	1	1				
H01-4560-13	N*	CARTON(INSIDE) TH-41A 440MHZ	1												
H01-4561-13	N*	CARTON(INSIDE) TH-41AT 440MHZ		1											
H01-4560-13	N*	CARTON(INSIDE) TH-41A 440MHZ			1										
H01-4585-13	N*	CARTON(INSIDE) TH-41A 430MHZ				1									
H01-4561-13	N*	CARTON(INSIDE) TH-41AT 440MHZ					1								
H01-4586-13	N*	CARTON(INSIDE) TH-41AT 430MHZ						1							
H01-4576-13	N*	CARTON(INSIDE) TH-41E TRIO							1						
H01-4581-13	N*	CARTON(INSIDE) TH-41E KENWOOD								1					
H01-4585-13	N*	CARTON(INSIDE) TH-41A 430MHZ									1				
H10-2591-02	*	PACKING FIXTURE(TOP)	1		1	1			1	1	1				
H10-2592-02	*	PACKING FIXTURE(BOTTOM)	1	1	1	1	1	1	1	1	1				
H10-2598-02	*	PACKING FIXTURE(TOP)		1			1	1							
H25-0703-14	*	BAG(TH-41 BODY)140X190	1	1	1	1	1	1	1	1	1				
H25-0029-04	*	BAG(ACS) 60X110	1	1	1	1	1	1	1	1	1				
H25-0096-04	*	BAG(BATTERY) 100X110	1	1	1	1	1	1	1	1	1				
J25-3251-05		FLEXIBLE PC BOARD RF-IF	1	1	1	1	1	1	1	1	1				
J32-0785-04		ROUND BOSS M2X6	2	2	2	2	2	2	2	2	2				
J39-0409-14	*	MIC SPACER	1	1	1	1	1	1	1	1	1				
J69-0306-04		HAND STRAP (ACS)	1	1	1	1	1	1	1	1	1				
J69-0309-05		O RING AF.SQL	2	2	2	2	2	2	2	2	2				
K27-0468-04		PUSH KNOB(A) TONE	1	1	1	1	1	1	1	1	1				
K27-0469-04		PUSH KNOB(B) +5KHZ	1	1	1	1	1	1	1	1	1				
K29-3012-04		KNOB(A) AF	1	1	1	1	1	1	1	1	1				
K29-3013-04		KNOB(B) SQL	1	1	1	1	1	1	1	1	1				
K29-3014-04		PTT LEVER	1	1	1	1	1	1	1	1	1				
LR40872		IC		1			1	1							Q , 3
L78-0010-05		CRISTAL 3.58MHZ		1			1	1							X , 1
N09-0683-05		SPECIAL SCREW M2 X4	2	2	2	2	2	2	2	2	2				
N30-2004-41		PAN HD SCREW(SWITCH PC BOARD)	1	1	1	1	1	1	1	1	1				
N33-2005-45		ROUND FLAT SCREW(CASE:TOP)	3	3	3	3	3	3	3	3	3				
N33-2008-45		ROUND FLAT SCREW(PANEL)	1	1	1	1	1	1	1	1	1				
N35-2005-45		BIND SCREW(CASE:BOTTOM)	2	2	2	2	2	2	2	2	2				
RD73FB2A473J		CHIP RES. 47K OHM 1/10W		5			5	5							R , 1, 2, 3, 4, 5
RD73FB2A154J		CHIP RES. 150KOHM 1/10W		1			1	1							R , 6
R12-3449-05		TRIM.POT. 10K OHM		1			1	1							VR , 1
T07-0235-05		SPEAKER	1	1	1	1	1	1	1	1	1				
T18-0054-05		EARPHONE (ACS)	1	1	1	1	1	1			1				
T90-0341-05	N	HERICAL ANTENNA(ACS)	1	1	1	1	1	1	1	1	1				

PART.NO	NOTE	NAME & DESCRIPTION	DISTINCTION & QUANTITY												REFERENCE.NO
			011	012	021	022	023	024	051	061	071				
T91-0312-15		ELECTRIC CONDENSER MIC	1	1	1	1	1	1	1	1	1				
W09-0334-05		BATTERY CHARGER ASS'Y 120V	1	1											
W09-0335-05		BATTERY CHARGER ASS'Y 220V			1	1	1	1							
W09-0336-05		BATTERY CHARGER ASS'Y 240V							1						
W09-0335-05		BATTERY CHARGER ASS'Y 220V								1					
W09-0339-05		BATTERY CHARGER ASS'Y 240V									1				
W09-0333-05		NI-CD BATTERY ASS'Y	1	1	1	1	1	1	1	1	1				
X41-1590-12	N*	SWITCH UNIT	1	1	1	1	1	1							
X41-1590-52	N*	SWITCH UNIT							1						
X41-1590-62	N*	SWITCH UNIT								1					
X41-1590-12	N*	SWITCH UNIT									1				
X44-1640-11	N*	RF UNIT	1	1	1										
X44-1640-71	N*	RF UNIT				1									
X44-1640-11	N*	RF UNIT					1								
X44-1640-71	N*	RF UNIT						1							
X44-1640-51	N*	RF UNIT							1						
X44-1640-61	N*	RF UNIT								1					
X44-1640-71	N*	RF UNIT									1				
X48-1410-12	N*	IF UNIT	1	1	1										
X48-1410-62	N*	IF UNIT				1									
X48-1410-12	N*	IF UNIT					1								
X48-1410-62	N*	IF UNIT						1							
X48-1410-51	N*	IF UNIT							1						
X48-1410-62	N*	IF UNIT								1	1				
X52-1270-51	*	TONE UNIT							1						
X52-1270-60	*	TONE UNIT								1					
2SA1037K(Q)		CHIP TR.		1			1	1							Q , 2
2SA1162(Y)		CHIP TR.													Q , 2
2SC2412K(Q)		CHIP TR.		1			1	1							Q , 1
2SC2712(GR)		CHIP TR.													Q , 1

SEMICONDUCTOR

Item	Remarks	Part No.
Diode		1N60A
		1S1555
		1S2588
		1SS133
		BA282
		MA856
		MI301
Vari-cap		1S2208
Zener Diode		MTZ6.8JB
LED		GL9PR24

Item	Remarks	Part No.
Chip Diode		MA152WA
TR		2SB698(E,F)
		2SC2668(Y)
		2SC2671(H)
		2SC3101
		2SC3019
Chip TR		2SA1037K(Q)
		2SA1037K(R)
		2SA1162(GR)
		2SA1162(Y)
		2SC2412K(Q)
	N	2SC2712(GR)
		2SC2712(Y)

Item	Remarks	Part No.
		2SC2714(Y)
		2SC3121
IC		LR40872
		LVC517
		MC3359P
		NJM4558M
		NJM555M
		TA7331F
		TC5081AP
		TC5082P
		TC9122P

SWITCH UNIT (X41-1590-XX) (-12 : K1,K2,M1,M2,M3,M4,X -52 : T -62 : W)

PART.NO	NOTE	NAME & DESCRIPTION	DISTINCTION & QUANTITY 012	052	062	REFERENCE.NO
CK73FB1H102K		CHIP CAP. 1000P 50V	14	14	14	R , 1, 2, 3, 4, 5, 6, 7 , 8, 9, 10, 11, 12, 13, 14
L33-0682-05		CHOKE COIL	1	1	1	L , 1
L92-0110-05		FERRITE CORE	1	1	1	L , 2
RD73FB2A473J		CHIP RES. 47K OHM 1/10W			1	R , 3
RD73FB2A102J		CHIP RES. 1K OHM 1/10W	1	1	1	R , 6
R05-3427-15		POTENTIOMETER 10K (B) WITH SW	1	1	1	VR , 1
R05-3428-05		POTENTIOMETER 10K (B)	1	1	1	VR , 2
R92-0670-05		CHIP RES. 0 OHM	3	3		R , 7, 8, 9
R92-0670-05		CHIP RES. 0 OHM			4	R , 7, 8, 9, 10
S40-2445-05		PUSH SWITCH(SELF LOCK)	2	2		S , 3, 4
S40-2445-05		PUSH SWITCH(SELF LOCK)			1	S , 3
S40-2446-05		PUSH SWITCH(NON LOCK)			1	S , 4
S59-3401-05		THUMB WHEEL SWITCH	1	1	1	S , 2
TC9122P		IC	1	1	1	Q , 3
1SS133		DIODE			2	D , 7, 8
2SC2412K(Q)		CHIP TR.			1	Q , 2
2SC2712(Y)		CHIP TR.				Q , 2

RF UNIT (X44-1640-XX) (-11 : K1,K2,M1,M3 -51 : T -61 : W -71 : M2,M4,X)

PART.NO	NOTE	NAME & DESCRIPTION			DISTINCTION & QUANTITY 011	051	061	071	REFERENCE.NO
BA282		DIODE			4		4	4	D , 8, 9, 10, 11
BA282		DIODE				4			D , 8, 10, 11, 21
CC45CH1H080D		CERAMIC	8P	50V	1	1	1	1	C , 54
CC73FSL1H470J		CHIP CAP.	47P	50V	1		1	1	C ,155
CC73FSL1H470J		CHIP CAP.	47P	50V		2			C ,155,156
CC73FSL1H680J		CHIP CAP.	68P	50V	3		3	3	C ,156,157,158
CC73FSL1H680J		CHIP CAP.	68P	50V		2			C ,157,158
CC73FCH1H0R5C		CHIP CAP.	0.5P	50V	3				C , 6, 21, 91
CC73FCH1H0R5C		CHIP CAP.	0.5P	50V		2	2	2	C , 6, 91
CC73FCH1H070D		CHIP CAP.	7P	50V	5	5	5	5	C , 29, 70, 71, 73, 98
CC73FSL1H101J		CHIP CAP.	100P	50V	1	1	1	1	C ,165
CC73FCH1HR75C		CHIP CAP.	0.75P	50V	2				C , 72,117
CC73FCH1HR75C		CHIP CAP.	0.75P	50V		3	3	3	C , 13, 72,117
CC73FCH1H080D		CHIP CAP.	8P	50V	5	5	5	5	C , 2, 7, 14, 52,118
CC73FCH1H010C		CHIP CAP.	1P	50V	1	1	1	1	C , 28
CC73FCH1H100D		CHIP CAP.	10P	50V	6	6	6	6	C , 30, 37, 92, 99,103,109
CC73FCH1H020C		CHIP CAP.	2P	50V	2	2	2	2	C , 16,100
CC73FCH1H150J		CHIP CAP.	15P	50V	3	3	3	3	C , 8, 53,162
CC73FCH1H030C		CHIP CAP.	3P	50V	6	6	6	6	C , 12, 23, 35, 42, 74,164
CC73FCH1H220J		CHIP CAP.	22P	50V	4	4	4	4	C , 3, 44, 87, 88
CC73FCH1H330J		CHIP CAP.	33P	50V	1	1	1	1	C , 15
CC73FCH1H390J		CHIP CAP.	39P	50V	2	2	2	2	C , 77, 78
CC73FCH1H040C		CHIP CAP.	4P	50V	3	3	3	3	C , 1,105,116
CC73FCH1H050C		CHIP CAP.	5P	50V	6	6	6	6	C , 5, 27, 49, 50, 51,113
CC73FCH1H060D		CHIP CAP.	6P	50V	1				C , 36
CC73FCH1H060D		CHIP CAP.	6P	50V		2	2	2	C , 36,104
CC73FTH1H220J		CHIP CAP.	22P	50V	1	1	1	1	C , 68
CC73FTH1H470J		CHIP CAP.	47P	50V	1	1	1	1	C , 67
CE04CW0J100M		ELECTRO	10	6.3V	2	2	2	2	C , 90,134
CE04CW1A101M		ELECTRO	100	10V	2	2	2	2	C ,139,148
CE04CW1C100M		ELECTRO	10	16V	1	1	1	1	C , 84
CE04CW1C4R7M		ELECTRO	4.7	16V	2	2	2	2	C , 46,163
CE04CW1V2R2M		ELECTRO	2.2	35V	1	1	1	1	C , 95
CE04CW1H010M		ELECTRO	1	50V	1	1	1	1	C ,122
CE04CW1C470M		ELECTRO	47	16V	1	1	1	1	C ,121
CK73FB1H102K		CHIP CAP.	1000P	50V	65	65	65	65	C , 4, 9, 10, 11, 19, 20, 22 , 24, 25, 26, 31, 32, 33, 34
CK73FB1H102K		CHIP CAP.	1000P	50V					C , 38, 39, 40, 41, 43, 43, 47 , 59, 69, 75, 76, 81, 82, 83
CK73FB1H102K		CHIP CAP.	1000P	50V					C , 85, 89, 93, 94, 96, 97,106 ,107,108,110,111,112,114,115
CK73FB1H102K		CHIP CAP.	1000P	50V					C ,120,127,129,130,131,132,135 ,140,141,142,143,144,145,146
CK73FB1H102K		CHIP CAP.	1000P	50V					C ,147,149,150,151,152,153,159 ,160,161
CK73FB1H222K		CHIP CAP.	2200P	50V	1	1	1	1	C , 80
CK73FB1H472K		CHIP CAP.	4700P	50V	2	2	2	2	C ,101,102
CK73FB1E103K		CHIP CAP.	0.01	25V	13	13	13	13	C , 18, 55, 56, 57, 58, 60, 61 , 62, 63, 64, 65, 66,137
CK73FB1H471K		CHIP CAP.	470P	50V	1	1	1	1	C , 79
CK73FB1E223K		CHIP CAP.	0.022	25V	1	1	1	1	C , 21
C05-0318-05		TRIMMER	6PF		6	6	6	6	TC , 1, 2, 3, 6, 7, 9
C05-0319-05		TRIMMER	10PF		5	5	5	5	TC , 4, 5, 8, 16, 17
C05-0326-05		TRIMMER	10PF		1	1	1	1	TC , 10
C05-0327-05		TRIMMER	20PF		1	1	1	1	TC , 11
C05-0328-05		TRIMMER	50P		4	4	4	4	TC , 12, 13, 14, 15

PARTS LIST

PART.NO	NOTE	NAME & DESCRIPTION	DISTINCTION & QUANTITY 011	051	061	071	REFERENCE.NO
C90-2012-05		ELECTRO 100 10V	1	1	1	1	C ,123
C90-0891-05		TANTALUM 4.7 16V	1	1	1	1	C ,136
E13-0165-05		RCA RECEPTACLE ANT.J	1	1	1	1	J , 1
F11-0873-04	*	SHIELD COVER (VCO)	1	1	1	1	
LVC517		IC	1	1	1	1	Q , 19
L19-0355-05	N	WIDE BAND TRANS 6.5T	1	1	1	1	L , 34
L32-0637-05		OSCILLATING COI	4	4	4	4	L , 20, 21, 22, 23
L34-2228-05	N	TUNING COIL 21.6MHZ	1	1	1	1	L , 10
L34-1053-05		COIL 4T	1	1	1	1	L , 3
L34-2229-05	N	TUNING COIL 140MHZ	2	2	2	2	L , 26, 27
L34-1059-05		COIL 3 2.5T	1	1	1	1	L , 4
L34-2230-05	N	TUNING COIL VCO	1	1	1	1	L , 31
L34-1083-05		COIL 1.25T	2	2	2	2	L , 16, 18
L34-1100-05	N	COIL	2	2	2	2	L , 5, 11
L34-1102-05	N	COIL 3 1.75T	1	1	1	1	L , 1
L34-1101-05	N	COIL	7	7	7	7	L , 6, 7, 8, 9, 12, 36, 37
L34-1103-05	N	COIL 3 1.5T	5	5	5	5	L , 13, 14, 15, 17, 35
L34-1107-05	N	COIL 3 2.25T	1	1	1	1	L , 2
L34-1112-05	N	COIL 2 9.33T	1	1	1	1	L , 19
L40-1092-17		INDUCTOR 1UH	1	1	1	1	L , 33
L40-3391-17		INDUCTOR 3.3UH	1	1	1	1	L , 32
L40-1501-17		INDUCTOR 15UH	1	1	1	1	L , 29
L40-4701-17		INDUCTOR 47UH	1	1	1	1	L , 30
L40-1011-17		INDUCTOR 100UH	2	2	2	2	L , 28, 38
L40-2282-17		INDUCTOR 0.22UH	1	1	1	1	L , 40
L71-0247-05	N	MCF 21.6MHZ	1	1	1	1	F , 1
L77-1241-05	N	XTAL 6.826MHZ	1	1	1	1	X , 1
L77-1249-05	N	XTAL 47.222MHZ TX(+5MHZ)	1				X , 5
L77-1247-05	N	XTAL 46.844MHZ TX(+1.6MHZ)		1			X , 5
L77-1245-05	N	XTAL 45.822MHZ TX(-7.6MHZ)			1		X , 5
L77-1248-05	N	XTAL 46.111MHZ TX(-5MHZ)				1	X , 5
L77-1250-05	N	XTAL 45.377MHZ RX(S)	1				X , 2
L77-1242-05	N	XTAL 44.266MHZ RX(S)		1	1	1	X , 2
L77-1252-05	N	XTAL 48.333MHZ TX(+5MHZ)	1				X , 3
L77-1244-05	N	XTAL 44.444MHZ RX(+1.6MHZ)		1			X , 3
L77-1246-05	N	XTAL 46.488MHZ TX(-1.6MHZ)			1		X , 3
L77-1249-05	N	XTAL 47.222MHZ TX(+5MHZ)				1	X , 3
L77-1251-05	N	XTAL 47.777MHZ TX(S)	1				X , 4
L77-1243-05	N	XTAL 46.666MHZ TX(S)		1	1	1	X , 4
L92-0110-05		FERRITE CORE	1	1	1	1	L , 39
MA152WA		CHIP DIODE	2	2	2	2	D , 15, 18
MA856		DIODE	5	5	5	5	D , 4, 5, 6, 7, 13
M1301		DIODE	1	1	1	1	D , 2
RD73FB2A101J		CHIP RES. 100 OHM 1/10W	5	5	5	5	R , 21, 75, 76, 93, 94
RD73FB2A221J		CHIP RES. 220 OHM 1/10W	1	1	1	1	R , 59
RD73FB2A222J		CHIP RES. 2.2KOHM 1/10W	3	3	3	3	R , 50, 61, 63
RD73FB2A151J		CHIP RES. 150 OHM 1/10W	1	1	1	1	R , 29
RD73FB2A153J		CHIP RES. 15K OHM 1/10W	2	2	2	2	R , 55, 96
RD73FB2A331J		CHIP RES. 330 OHM 1/10W	3	3	3	3	R , 17, 30, 88
RD73FB2A183J		CHIP RES. 18K OHM 1/10W	1	1	1	1	R , 45
RD73FB2A272J		CHIP RES. 2.7KOHM 1/10W	3	3	3	3	R , 1, 5, 70
RD73FB2A104J		CHIP RES. 100KOHM 1/10W	1	1	1	1	R , 69

PART.NO	NOTE	NAME & DESCRIPTION	DISTINCTION & QUANTITY 011	051	061	071	REFERENCE.NO
RD73FB2A332J		CHIP RES. 3.3KOHM 1/10W	3	3	3	3	R , 11, 67, 79
RD73FB2A223J		CHIP RES. 22K OHM 1/10W	2	2	2	2	R , 83, 90
RD73FB2A154J		CHIP RES. 150KOHM 1/10W	1	1	1	1	R , 74
RD73FB2A472J		CHIP RES. 4.7KOHM 1/10W	5	5	5	5	R , 2, 4, 78, 82, 89
RD73FB2A224J		CHIP RES. 220KOHM 1/10W	1	1	1	1	R , 84
RD73FB2A330J		CHIP RES. 33 OHM 1/10W	1	1	1	1	R , 6
RD73FB2A471J		CHIP RES. 470 OHM 1/10W	3	3	3	3	R , 13, 47, 52
RD73FB2A273J		CHIP RES. 27K OHM 1/10W	1	1	1	1	R , 44
RD73FB2A274J		CHIP RES. 270KOHM 1/10W	1	1	1	1	R , 51
RD73FB2A821J		CHIP RES. 820 OHM 1/10W	3	3	3	3	R , 8, 46, 66
RD73FB2A473J		CHIP RES. 47K OHM 1/10W	4	4	4	4	R , 53, 85, 86, 95
RD73FB2A334J		CHIP RES. 330KOHM 1/10W	1	1	1	1	R , 60
RD73FB2A2R2J		CHIP RES. 2.2 OHM 1/10W	2	2	2	2	R , 25, 97
RD73FB2A562J		CHIP RES. 5.6KOHM 1/10W	8	8	8	8	R , 35, 36, 37, 38, 54, 71, 92 ,102
RD73FB2A100J		CHIP RES. 10 OHM 1/10W	1	1	1	1	R , 23
RD73FB2A563J		CHIP RES. 56K OHM 1/10W	1	1	1	1	R , 10
RD73FB2A220J		CHIP RES. 22 OHM 1/10W	1	1	1	1	R , 27
RD73FB2A122J		CHIP RES. 1.2KOHM 1/10W	2	2	2	2	R , 39, 56
RD73FB2A822J		CHIP RES. 8.2KOHM 1/10W	2	2	2	2	R , 42, 43
RD73FB2A470J		CHIP RES. 47 OHM 1/10W	4	4	4	4	R , 3, 19, 20, 22
RD73FB2A560J		CHIP RES. 56 OHM 1/10W	1	1	1	1	R , 72
RD73FB2A103J		CHIP RES. 10K OHM 1/10W	8	8	8	8	R , 49, 57, 58, 64, 80, 81, 87 , 91
RD73FB2A680J		CHIP RES. 68 OHM 1/10W	1	1	1	1	R , 26
RD73FB2A152J		CHIP RES. 1.5KOHM 1/10W	1	1	1	1	R , 14
R92-0670-05		CHIP RES. 0 OHM	3	3	3	3	R , 98, 99,103
S50-1425-05		TACT SWITCH PTT	1	1	1	1	S , 1
TC5082P		IC	1	1	1	1	Q , 12
TC5081AP		IC	1	1	1	1	Q , 13
1SS133		DIODE	3	3		3	D , 17, 20, 22
1SS133		DIODE			5		D , 16, 17, 19, 20, 22
1S1555		DIODE	1	1	1	1	D , 1
1S2588		DIODE	1	1	1	1	D , 3
1S2208		VOLTAGE VARIABL	2	2	2	2	D , 12, 14
2SA1037K(Q)		CHIP TR.	2	2	2	2	Q , 20, 26
2SA1162(Y)		CHIP TR.					Q , 20, 26
2SA1037K(R)		CHIP TR.	2	2	2	2	Q , 22, 24
2SA1162(GR)		CHIP TR.					Q , 22, 24
2SB698(E,F)		TR	1	1	1	1	Q , 18
2SC2714(Y)		CHIP TR.	2	2	2	2	Q , 4, 9
2SC3121	N	CHIP TR.	2	2	2	2	Q , 14, 15
2SC2668(Y)		TR	3	3	3	3	Q , 10, 11, 17
2SC2671(H)		TR	6	6	6	6	Q , 1, 2, 3, 5, 6, 16
2SC3019		TR	1	1	1	1	Q , 7
2SC2412K(Q)		CHIP TR.	4	4	4	4	Q , 21, 23, 25, 27
2SC3101		TR	1	1	1	1	Q , 8
2SC2712(Y)		CHIP TR.					Q , 21, 23, 25, 27

IF UNIT (X48-1410-XX) (-12 : K1,K2,M1,M3 -51 : T -62 : M2,M4,X,W)

PART.NO	NOTE	NAME & DESCRIPTION			DISTINCTION & QUANTITY 012	051	062	REFERENCE.NO
CC73FCH1H270J		CHIP CAP.	27P	50V	1	1	1	C , 3
CC73FSL1H101J		CHIP CAP.	100P	50V	5	5	5	C , 2, 16, 36, 37, 38
CC73FSL1H151J		CHIP CAP.	150P	50V	1	1	1	C , 9
CC73FSL1H391J		CHIP CAP.	390P	50V	1	1	1	C , 47
CE04CW0J330M		ELECTRO	33	6.3V	1	1	1	C , 43
CE04CW1A100M		ELECTRO	10	10V	2	2	2	C , 40, 52
CE04CW1E3R3M		ELECTRO	3.3	25V	1	1	1	C , 33
CE04CW1H010M		ELECTRO	1	50V	1	1	1	C , 34
CE04CW1V2R2M		ELECTRO	2.2	35V	3	3	3	C , 19, 21, 44
CK45B1H102K		CERAMIC	1000P	50V	1		1	C , 1
CK45B1H102K		CERAMIC	1000P	50V		2		C , 1, 64
CK73FB1H102K		CHIP CAP.	1000P	50V	20	20	20	C , 7, 12, 14, 15, 20, 29, 30 , 31, 32, 35, 42, 49, 50, 51 , 53, 54, 55, 56, 57, 58
CK73EB1H273K		CHIP CAP.	0.027	50V	1	1	1	C , 23
CK73FB1H102K		CHIP CAP.	1000P	50V	4		4	C , 60, 61, 62, 63
CK73FB1H102K		CHIP CAP.	1000P	50V		3		C , 60, 62, 63
CK73FB1H272K		CHIP CAP.	2700P	50V	1	1	1	C , 45
CK73FF1E473Z		CHIP CAP.	0.047	25V	3	3	3	C , 4, 8, 11
CK73FB1H682K		CHIP CAP.	6800P	50V	1	1	1	C , 46
CK73FB1E223K		CHIP CAP.	0.022	25V	2	2	2	C , 13, 17
C90-0888-05		TANTALUM	0.1	16V	1	1	1	C , 39
C90-0889-05		TANTALUM	0.22	16V	1	1	1	C , 10
C90-2006-05		TANTALUM	0.33	16V	1	1	1	C , 48
C90-0894-05		TANTALUM	0.47	16V	1	1	1	C , 18
C90-2007-05		TANTALUM	3.3	16V	1	1	1	C , 22
C90-2012-05		ELECTRO	100	10V	3	3	3	C , 25, 26, 28
C90-0891-05		TANTALUM	4.7	16V	1	1	1	C , 24
C91-0488-05		CERAMIC	0.1		2	2	2	C , 5, 6
C91-0430-05		LAYER CAP.	0.047		1	1	1	C , 41
C91-1035-05		FILM CAP.	0.22	63V	1	1	1	C , 27
E11-0420-05		MIC JACK			1	1	1	J , 2
E11-0421-05		PHONE JACK			1	1	1	J , 1
L34-2217-05		TUNING COIL	455KHZ		1	1	1	L , 1
L72-0335-05		CERAMIC FILTER	CFU-455E		1	1	1	F , 1
L77-1253-05	N	XTAL	21.145MHZ		1	1	1	X , 1
MA152WA		CHIP DIODE			1	1	1	D , 4
MC3359P		IC			1	1	1	Q , 1
MTZ6.8JB		ZENER DIODE	6.8V		1	1	1	D , 3
NJM4558M		IC			1	1	1	Q , 6
RD73FB2A102J		CHIP RES.	1K OHM	1/10W	3	3	3	R , 14, 16, 19
RD73FB2A152J		CHIP RES.	1.5KOHM	1/10W	1	1	1	R , 29
RD73FB2A473J		CHIP RES.	47K OHM	1/10W	4	4	4	R , 18, 36, 38, 39
RD73FB2A222J		CHIP RES.	2.2KOHM	1/10W	4	4	4	R , 4, 26, 33, 34
RD73FB2A154J		CHIP RES.	150KOHM	1/10W	1	1	1	R , 13
RD73FB2A273J		CHIP RES.	27K OHM	1/10W	1	1	1	R , 35
RD73FB2A470J		CHIP RES.	47 OHM	1/10W	1	1	1	R , 12
RD73FB2A104J		CHIP RES.	100KOHM	1/10W	1	1	1	R , 10
RD73FB2A822J		CHIP RES.	8.2KOHM	1/10W	1	1	1	R , 5
RD73FB2A334J		CHIP RES.	330KOHM	1/10W	1	1	1	R , 6
RD73FB2A103J		CHIP RES.	10K OHM	1/10W	4	4	4	R , 1, 7, 8, 27
RD73FB2A101J		CHIP RES.	100 OHM	1/10W	1	1	1	R , 11

PART.NO	NOTE	NAME & DESCRIPTION	DISTINCTION & QUANTITY 012	051	062	REFERENCE.NO
RD73FB2A223J		CHIP RES. 22K OHM 1/10W	6	6	6	R , 2, 3, 22, 23, 24, 37
RD73FB2A221J		CHIP RES. 220 OHM 1/10W	2	2	2	R , 25, 32
RD73FB2A333J		CHIP RES. 33K OHM 1/10W	2	2	2	R , 21, 28
R12-3449-05		TRIM.POT. 10K OHM	1	1	1	VR , 1
R90-0526-05		RESISTOR BLOCK 27K OHM X4	1	1	1	RB , 1
S31-1414-05		SLIDE SWITCH TXSTOP,KEYLOOK	1	1	1	S , 1
S31-2409-05		SLIDE SWITCH OFFSET	1	1	1	S , 2
TA7331F	N	IC	1	1	1	Q , 2
1N60A		DIODE	2	2	2	D , 1, 2
1SS133		DIODE	1	1	1	D , 5
2SA1037K(Q)		CHIP TR.	1	1	1	Q , 7
2SA1162(Y)		CHIP TR.				Q , 7
2SB698(E,F)		TR	1	1	1	Q , 3
2SC2412K(Q)		CHIP TR.	3	3	3	Q , 4, 5, 8
2SC2712(Y)		CHIP TR.				Q , 4, 5, 8

TONE UNIT (X52-1270-XX) (-51 : T -60 : W)

PART.NO	NOTE	NAME & DESCRIPTION	DISTINCTION & QUANTITY 051	060	REFERENCE.NO
CE04CW1C100M		ELECTRO 10 16V	1		C , 7
CK73FB1H392K		CHIP CAP. 3900P 25V	1	1	C , 6
CK73FB1E103K		CHIP CAP. 0.01 25V	3	3	C , 2, 4, 5
CK73EB1E333K		CHIP CAP. 0.033 25V	1	1	C , 3
NJM555M		IC	1	1	Q , 1
RD73FB2A472J		CHIP RES. 4.7KOHM 1/10W	1	1	R , 2
RD73FB2A123J		CHIP RES. 12K OHM 1/10W	2	2	R , 4, 6
RD73FB2A333J		CHIP RES. 33K OHM 1/10W	1	1	R , 7
RD73FB2A473J		CHIP RES. 47K OHM 1/10W	1	1	R , 5
RD73FB2A913J		CHIP RES. 91K OHM 1/10W	1	1	R , 3
R12-3452-05		TRIM.POT 20K	1	1	VR , 1
R92-0670-05		CHIP RES. 0 OHM		1	R , 8

TH-41A/AT/E PC BOARD VIEW

SWITCH UNIT (X41-1590-XX)
(-12 : K1,K2,M1,M2,M3,M4,X -52 : T -62 : W) Component side view

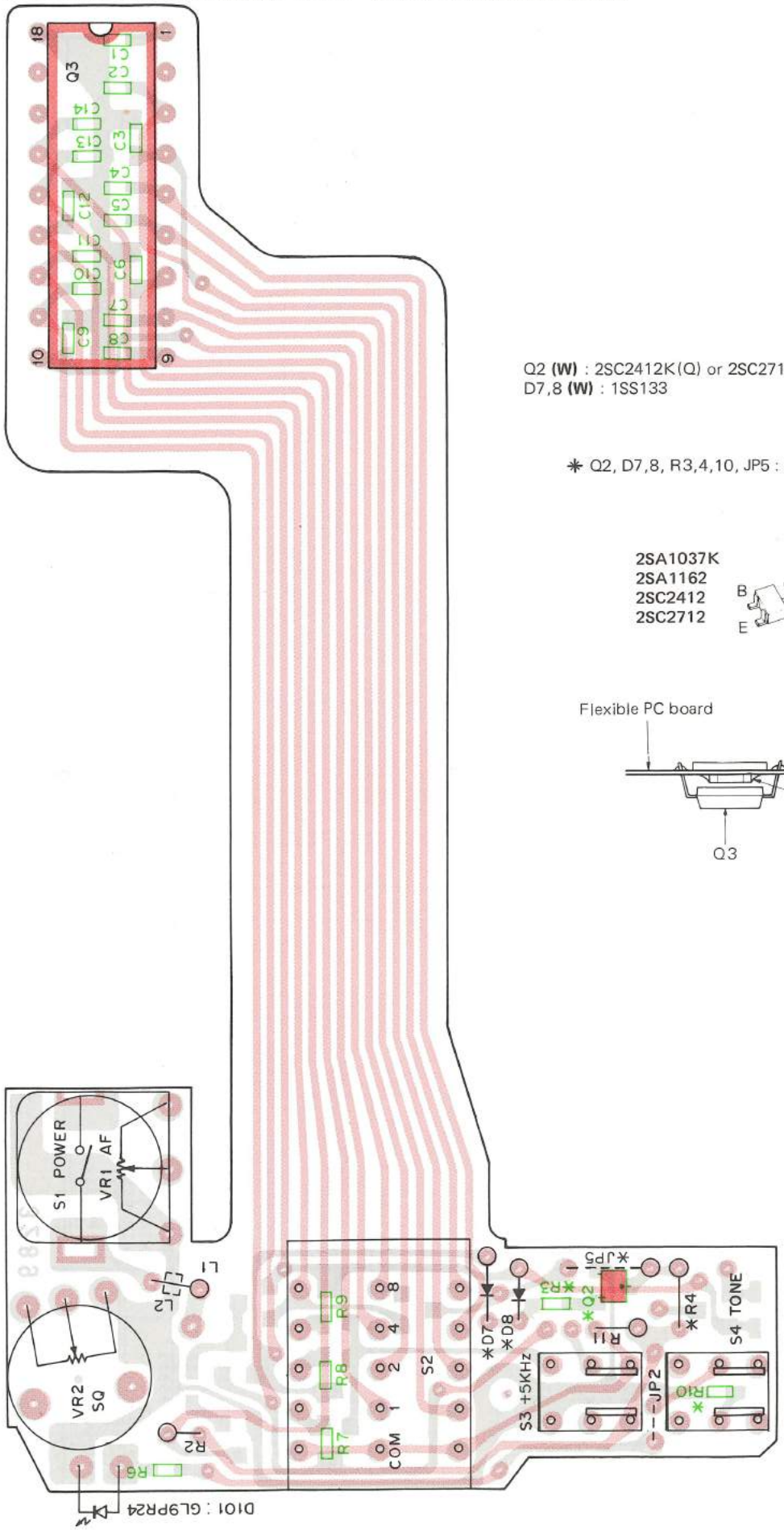

Q2 **(W)** : 2SC2412K(Q) or 2SC2712(Y) Q3 : TC9122P
D7,8 **(W)** : 1SS133

✱ Q2, D7,8, R3,4,10, JP5 : **W** TYPE ONLY

2SA1037K
2SA1162
2SC2412
2SC2712

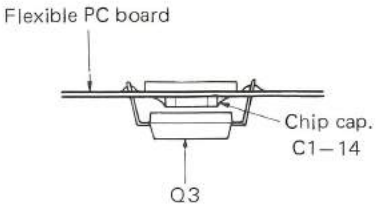

TONE UNIT (X52-1270-XX) (-51 : T -60 : W) Foil side view

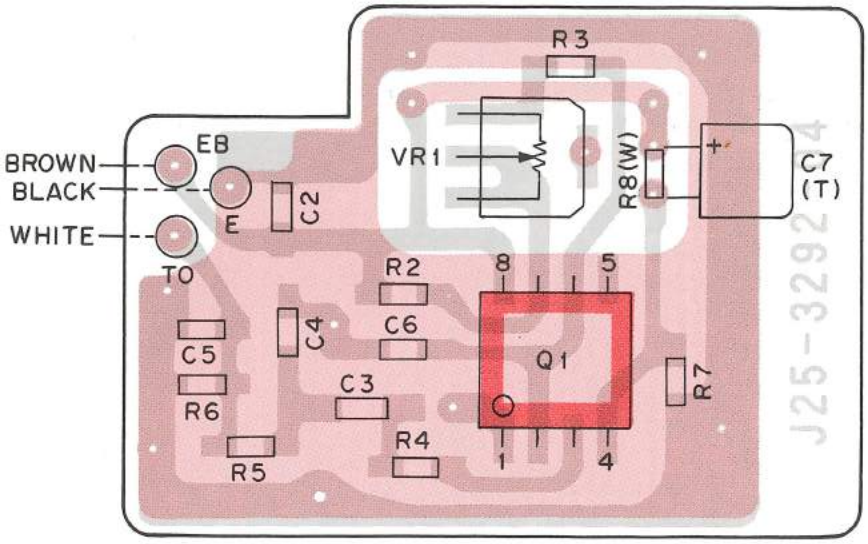

Q1 : NJM555M

DTMF UNIT (TH-41AT ONLY) Foil side view

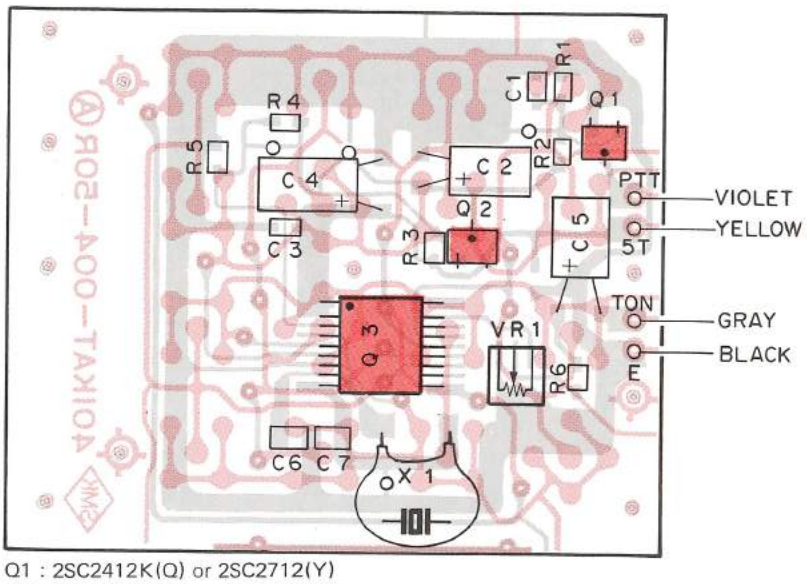

Q1 : 2SC2412K(Q) or 2SC2712(Y)
Q2 : 2SA1037K(Q) or 2SA1162(Y)
Q3 : LR40872

CASE (TOP) ASS'Y (A09-0403-05) WITH DTMF : M4
(A09-0404-05) WITH DTMF : K2,M3

Parts No.	Remarks	Description	Q'ty	Ref. No.
A02-0703-01	N*	Case (Top) 440MHz KENWOOD : K2,M3		
A02-0704-01	N*	Case (Top) 430MHz KENWOOD : M4		
B42-2344-08	*	Key board plate	1	
CC73CH1H300J		Chip cap. 30P 50V	2	C6,7
CE04CW0J100M		Electro 10 6.3V	2	C2,4
CE04CE1C4R7M		Electro 4.7 16V	1	C5
CK73FB1E103K		Chip cap. 0.01 25V	2	C1,3
LR40872		IC	1	Q3
L78-0010-05		Crystal 3.58MHz	1	X1
RD73FB2A473J		Chip res. 47kΩ 1/10W	5	R1–5
RD73FB2A154J		Chip res. 150kΩ 1/10W	1	R6
R12-3449-05		Trim. pot. 10kΩ	1	VR1
2SA1037K(Q) or 2SA1162(Y)		Chip TR.	1	Q2
2SC2412K(Q) or 2SC2712(Y)		Chip TR.	1	Q1

TH-41A/AT/E PC BOARD VIEW

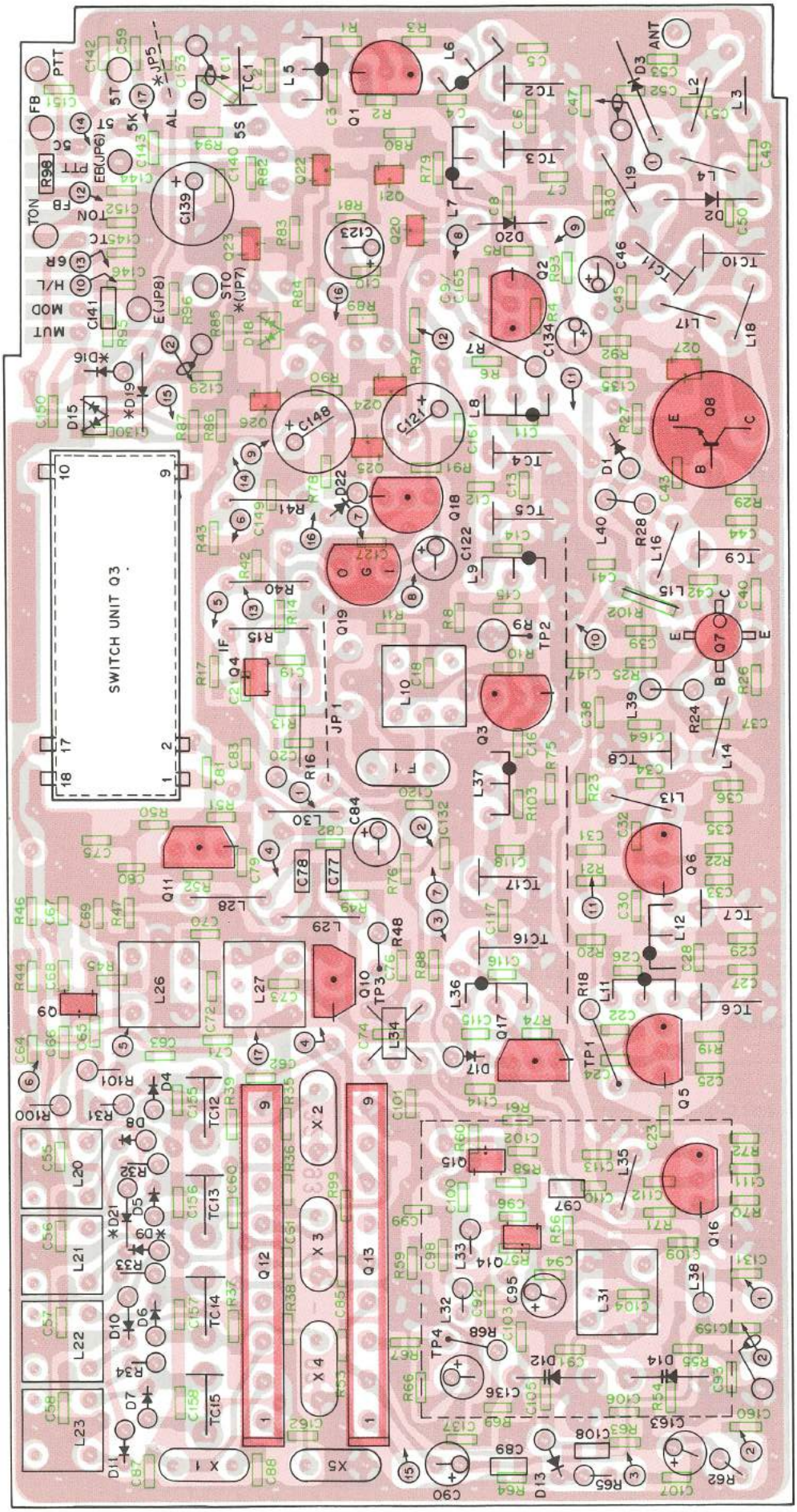

RF UNIT (X44-1640-XX) (-11 : K1,K2,M1,M3 -51 : T -61 : W -71 : M2,M4,X) Component side view

Q1–3,5,6,16 : 2SC2671(H) Q4,9 : 2SC2714(Y) Q7 : 2SC3019 Q8 : 2SC3101 Q10,11,17 : 2SC2668(Y) Q12 : TC5082P Q13 : TC5081AP Q14,15 : 2SC3121
Q18 : 2SB698(E,F) Q19 : LVC517 Q20,26 : 2SA1037K(Q) or 2SA1162(Y) Q21,23,25,27 : 2SC2412K (Ω) or 2SC2712(Y) Q22,24 : 2SA1037K(R) or 2SA1162(G)
D1 : 1S1555 D2 : MI301 D3 : 1S2588 D4–7,13 : MA856 D8,10,11 : BA282 D9 **(K1,K2,M2,M3,M4,X,W)** : BA282 D12,14 : 1S2208 D15,18 : MA152WA
D16,19 **(W)** : 1SS133 D17,20,22 : 1SS133 D21 **(T)** : BA282

	D9	D16,19	D21	JP5	JP7
K1,K2,M1,M3	O	X	X	X	O
M2,M4,X	O	X	X	X	O
T	X	X	O	X	X
W	O	O	X	O	X

O : Used, X : Not used

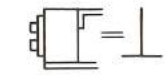

TC10–15

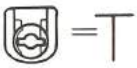

TC1–9,16,17

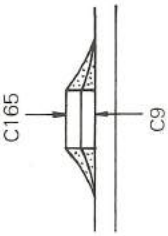

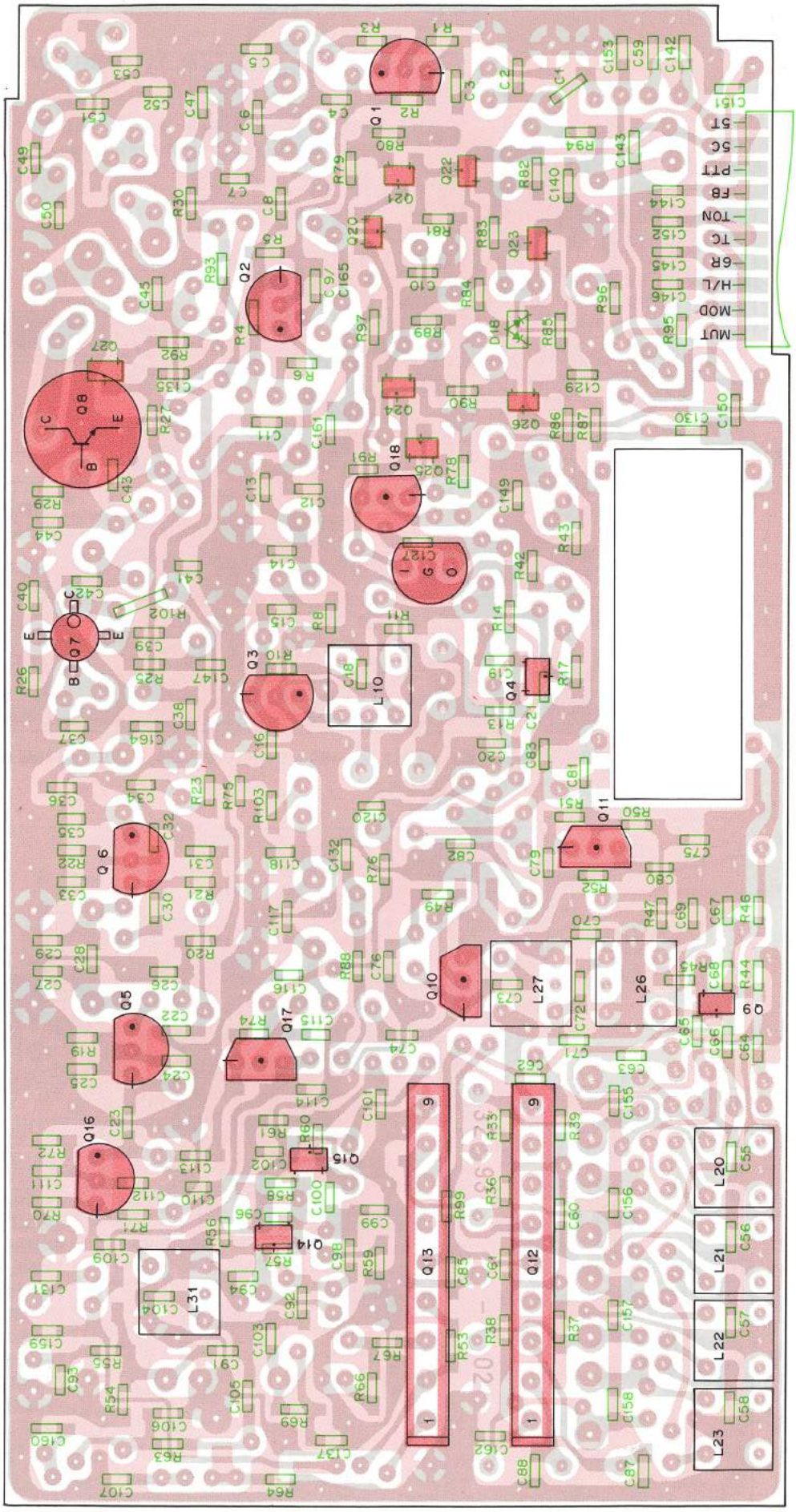

RF UNIT (X44-1640-XX) (-11 : K1,K2,M1,M3 -51 : T -61 : W -71 : M2,M4,X) Foil side view

2SB698

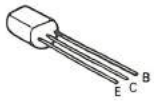

2SC2668

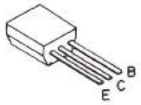

2SC2671

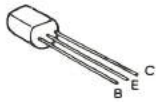

2SC3101

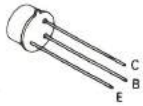

LVC517

2SC3019

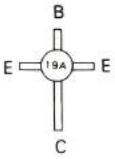

TC5081AP
TC5082P

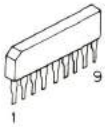

2SA1037K
2SA1162
2SC2412K
2SC2712
2SC2714
2SC3121

MA152WA

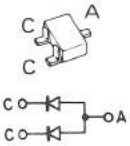

TH-41A/AT/E PC BOARD VIEWS

IF UNIT (X48-1410-XX) (-12 : K1,K2,M1,M3 -51 : T -62 : M2,M4,X,W) Component side view

	K1,K2, M1,M3	M2,M4, X,W	T
R40	O	X	X
C60	O	O	X
C64	X	X	O
JP1,2	O	O	X
JP3,4	X	X	O

O : Used, X : Not used

W	D.A	S	D.B
K,M,X	−	S	+
T	+	S	REV

Q1 : MC3359P
Q2 : TA7331F
Q3 : 2SB698(E,F)
Q4,5,8 : 2SC2412K(Q) or 2SC2712(Y)
Q6 : NJM4558M
Q7 : 2SA1037K(Q) or 2SA1162(Y)

D1,2 : 1N60A
D3 : MTZ6.8JB
D4 : MA152WA
D5 : 1SS133

AFSK IN
AFSK OUT: Q1 Pin 10

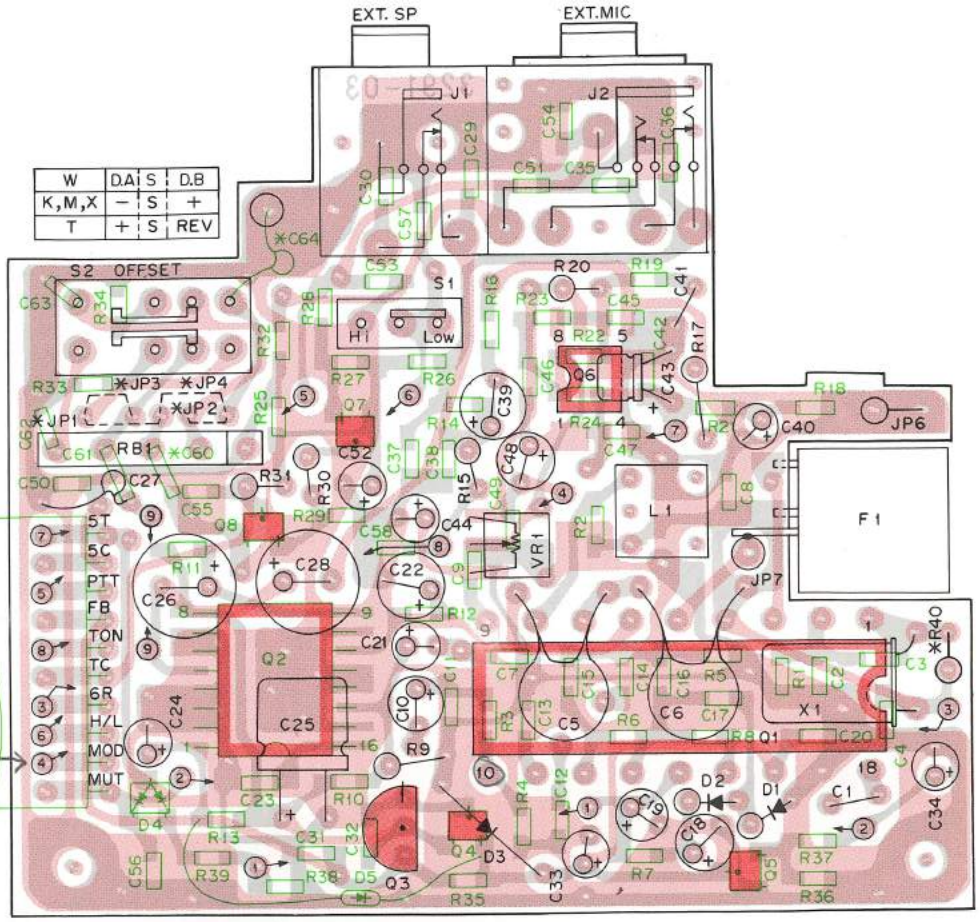

IF UNIT (X48-1410-XX) (-12 : K1,K2,M1,M3 -51 : T -62 : M2,M4,X,W) Foil side view

2SB698

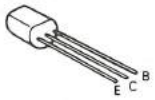

2SA1037K
2SA1162
2SC2412K
2SC2712

MA152WA

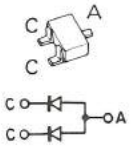

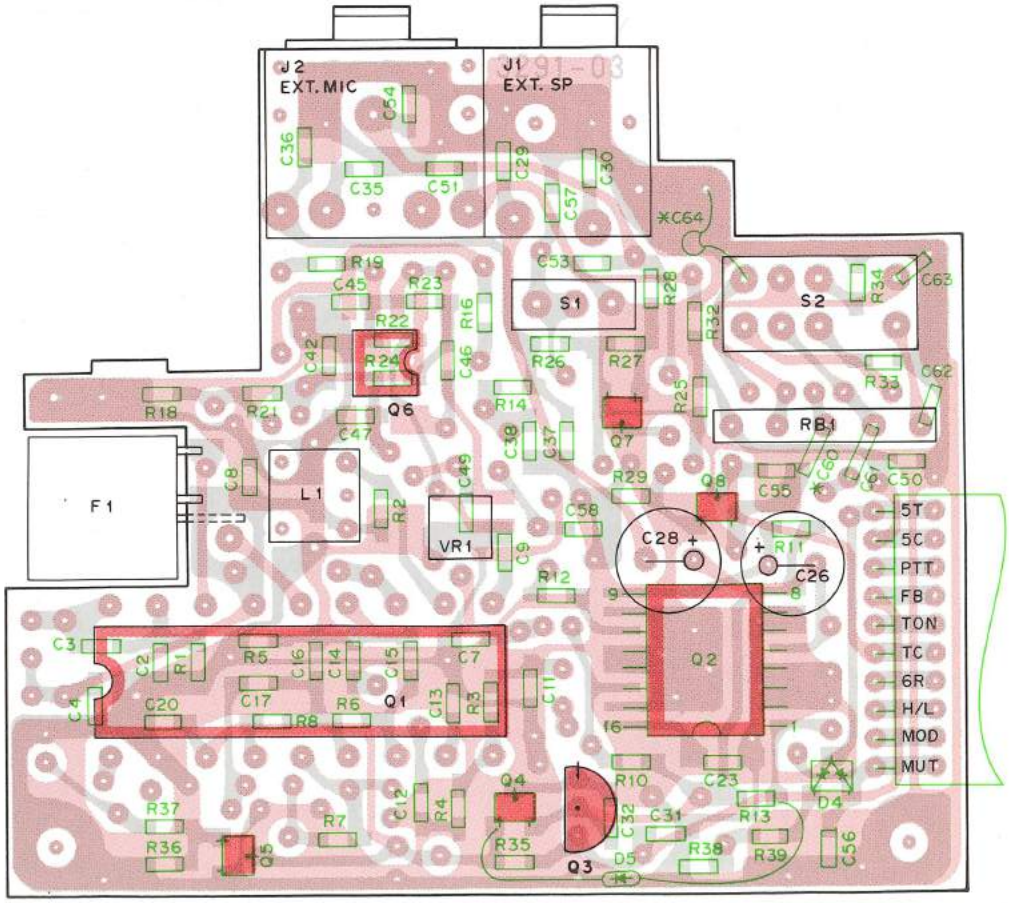

DISASSEMBLY

TOP CASE REMOVE METHOD

❶ Remove screw (M2 x 5) 3.
❷ Remove front case as allow mark direction holding the stop pin with something, ⊖ screw driver as shown right.

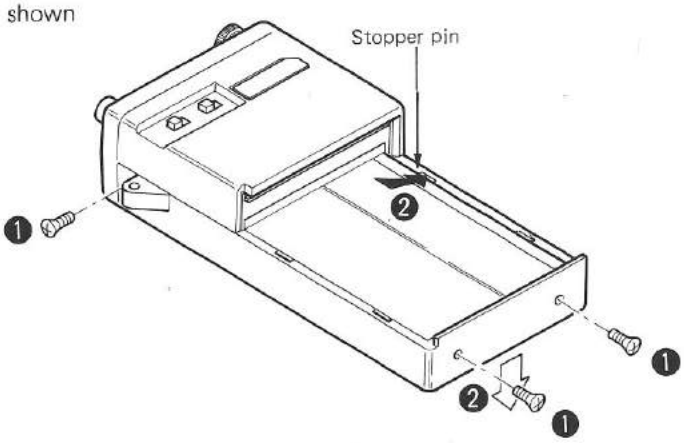

FRONT PANEL REMOVE METHOD

❶ Remove screw on RCA connector and AF, SQ knob.
❷ Remove screw (M2 x 8) 1.
❸ Remove front panel by push stopper with screw driver as shown below.

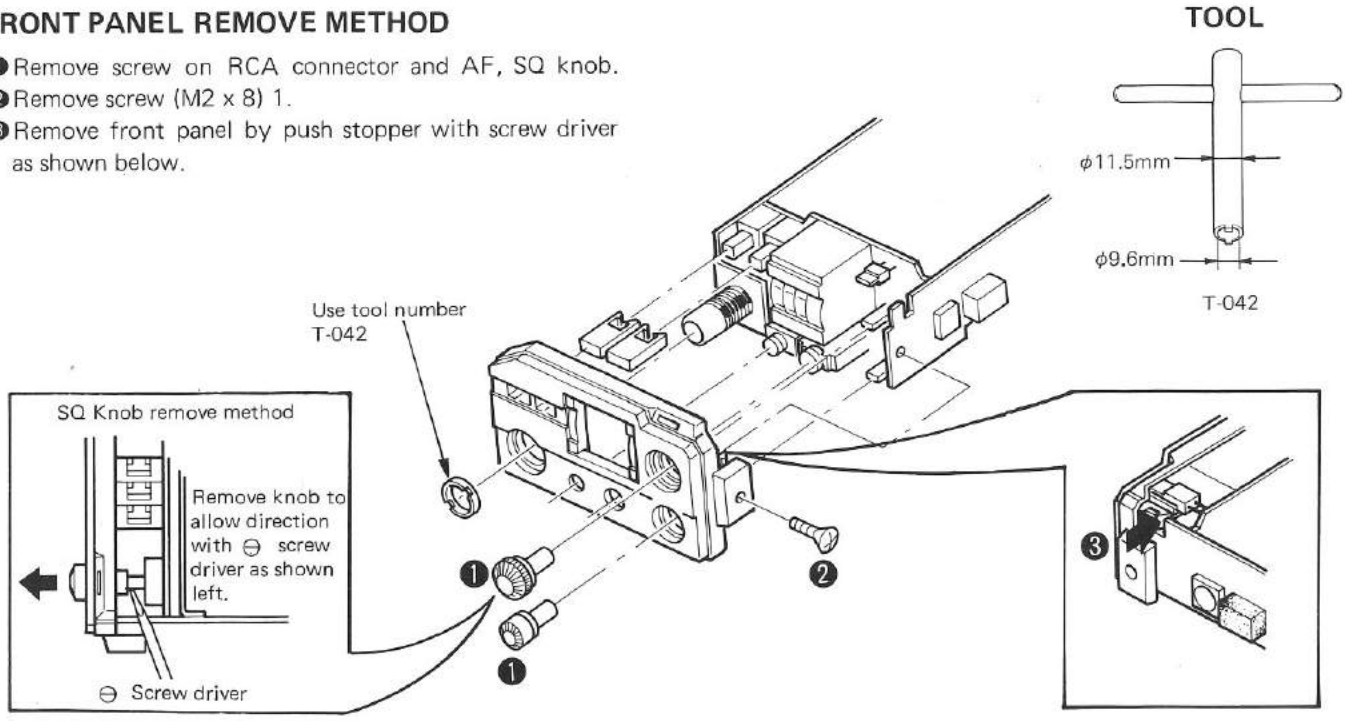

SHIELD COVER REMOVE METHOD

❶ Remove the top boss which tightened the IF unit.
❷ Remove solder at four spots with solder wick.
❸ Remove solder heating spot with solding iron.

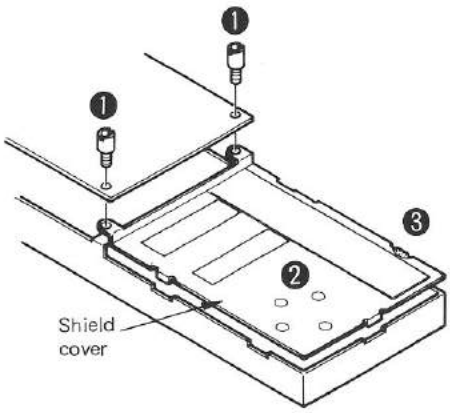

TH-41A/AT/E DISASSEMBLY

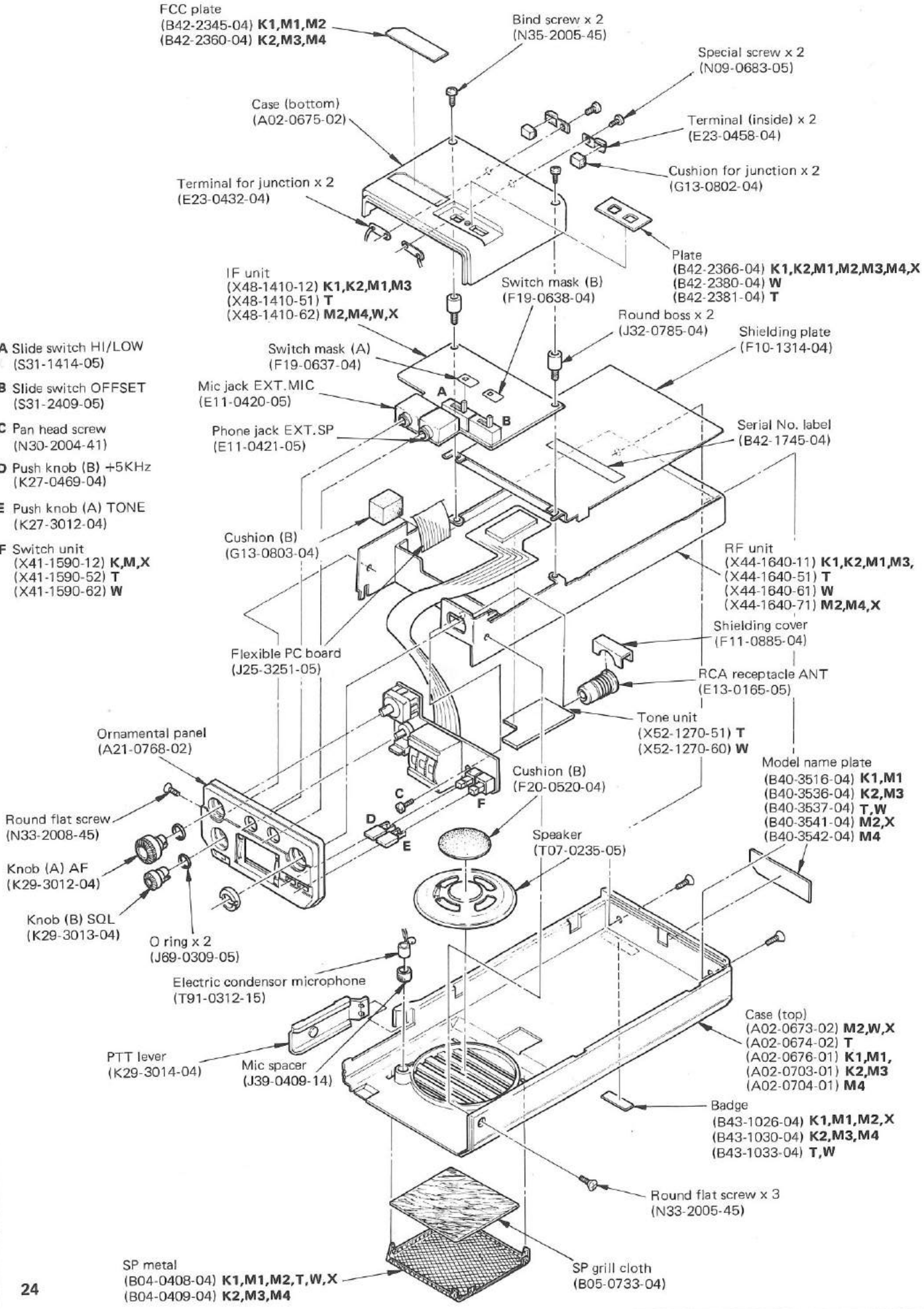

LEVEL DIAGRAM

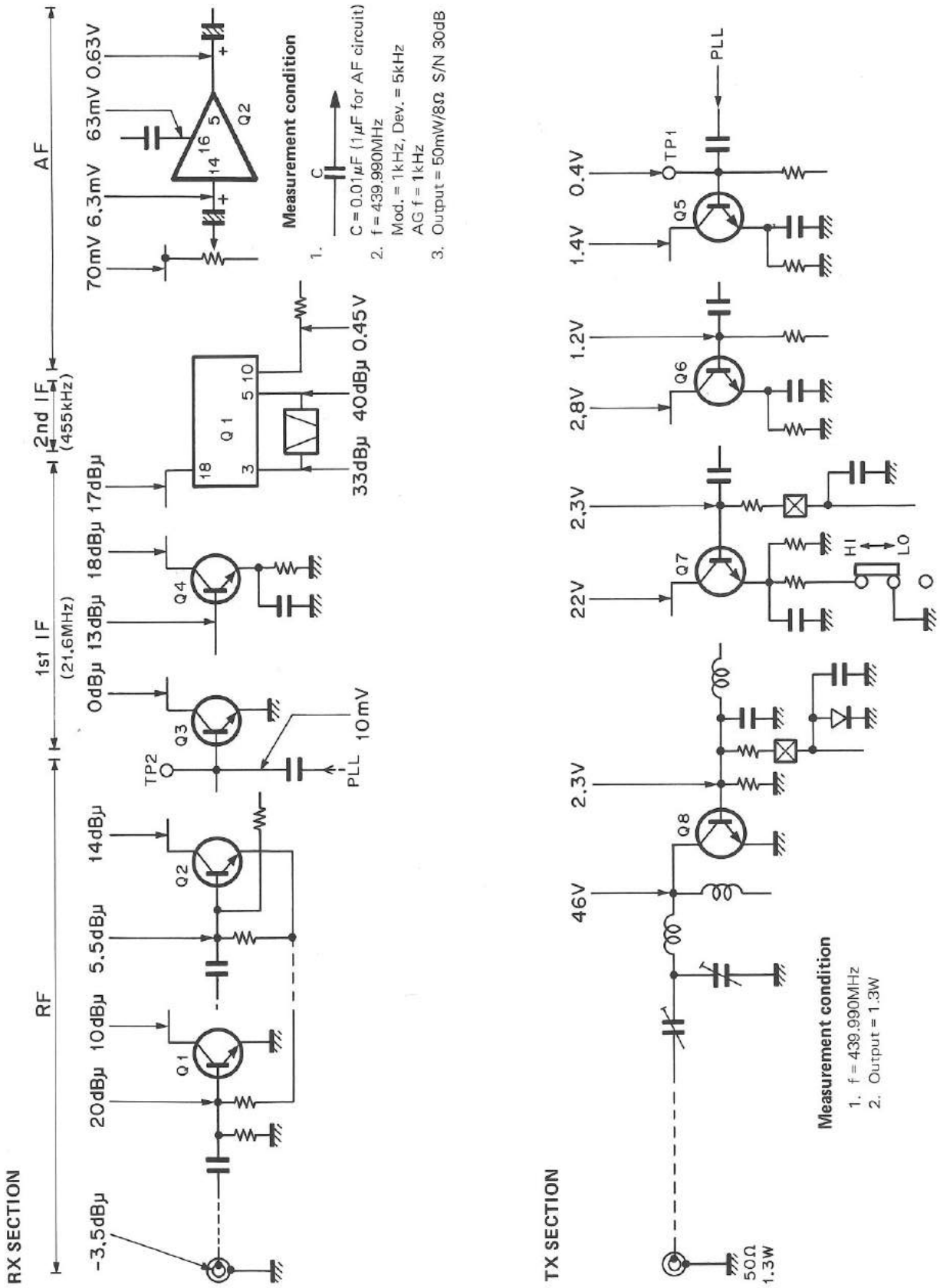

ADJUSTMENT

PREOPERATION

Unless otherwise specified. Set the controls as follows.

POWER/VOL ..... OFF
HI/LOW ..... HI
SQL ..... MIN

- When adjusting the trimmers or coils, use a non-induced adjusting rod of bakelite, etc.
- When adjusting the RX section never transmit to prevent SSG damage.
- Connect MIC connector as shown right.
- Uses following RCA-BNC adaptor plug (MODEL AJ-3) for ANT connection.
- The output level of SSG is indicated as SSG's open circuit.

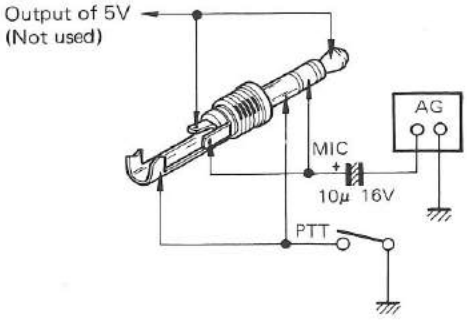

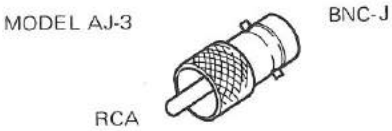

TX/RX Section (Common)

Item	Condition	Measurement			Adjustment			Specification/ Remarks
		Test-equipment	Unit	Ter-minal	Unit	Part	Method	
1. Voltage check	1) DC power supply : 7.2V	DC V.M	RF	FB				7.2V
	2) 5C			5C				5.0V
	3) 6R			6R				5.7V
	4) 5T PTT : ON			5T				4.9V
	5) Receiver							

PLL Section

Item	Condition	Measurement			Adjustment			Specifications/ Remarks
		Test equipment	Unit	Ter-minal	Unit	Part	Method	
1. HET	1) f : any • Cut wire No. 1 or connect to GND at Q15 collector on RF unit. • Turn L27 slug all the way inside. L27 OFFSET switch : "S"	RFVTVM	RF	TP3	RF	L26, 27	MAX Repeat couple times.	Approx. 17mVrms
	2) Connect D15 cathode to GND via 100Ω resistor as shown right. Repeat each on TX/RX.					L27	Adjust to equal level on TX/RX.	Approx. 7.5mVrms
2. PLL voltage setting	1) f = 430.00MHz **(M2,M4,T,W,X)** f = 440.00MHz **(K,M,M3)**	DC V.M	RF	TP4	RF	L31	1.1V	±0.1V
	2) Transmit						Confirm	1.6V **(M2,M4,T,W,X)** 1.2V**(K,M,M3)** ±0.2V
	3) f = 439.99MHz **(M2,M4,T,W,X)** f = 449.99MHz **(K,M1,M3)**							4V or less
	4) Transmit							4.1V or less

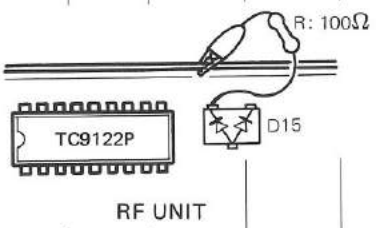

ADJUSTMENT

Item	Condition	Measurement			Adjustment			Specifications/ Remarks
		Test-equipment	Unit	Ter-minal	Unit	Part	Method	
3. RX. f adjustment	1) OFFSET switch : "S" f = 435.00MHz **(M2,M4,T,W,X)** f = 445.00MHz **(K,M1,M3)**	f. counter	RF	TP2	RF	L20	413.400MHz **(M2,M4,T,W,X)** 423.400MHz **(K,M1,M3)** f−21.6MHz	±100Hz
	2) +5kHz switch : ON					TC12	413.405MHz **(M2,M4,T,W,X)** 423.405MHz **(K,M1,M3)**	
	3) REV **(T)** only f = 435.00MHz OFFSET switch : "REV"					L21	415.000MHz (f−21.6)+1.6MHz	
	4) +5kHz switch : ON					TC13	415.005MHz	

TX Section

Item	Condition	Measurement			Adjustment			Specifications/ Remarks
		Test-equipment	Unit	Ter-minal	Unit	Part	Method	
1. Power output adjustment	1) f = 430.00MHz **(M2,M4,T,W,X)** f = 440.00MHz **(K,M1,M3)** ANT : Connect a power meter HI/LO : HI Transmit Power supply : 7.2V	Power meter			RF	TC6, 7	MAX	
	2) f = 435.00MHz **(K2,M4,T,W,X)** f = 445.00MHz **(K,M1,M3)** TC10 Min position 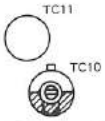	Power meter DC AM (1A)				TC8–11	MAX	1.2W or more 650mA or less
	3) f = 430.00MHz **(M2,M4,T,W,X)** f = 440.00MHz **(K,M2,M3)** HI/LO : HI						Confirm	1.0W or more 650mA or less
	HI/LO : LO							50mW or more 350mA or less
	4) f = 439.99MHz **(M2,M4,T,W,X)** f = 449.99MHz **(K,M1,M3)** HI/LO : HI							1.0W or more 650mA or less
	HI/LO : LO							50mW or more 350mA or less
2. Deviation adjustment	1) ANT : Power meter and linear detector, use capacitor. 10μF/16V between AG output to MIC terminal f = 435.00MHz **(M2,M4,T,W,X)** f = 445.00MHz **(K,M1,M3)** AG : 1kHz, 50mV Transmit	Power meter Linear detector			IF	VR1	4.5kHz	4.5kHz±0.1kHz
	2) AG : 1kHz, 5mV						Confirm	3–3.5kHz

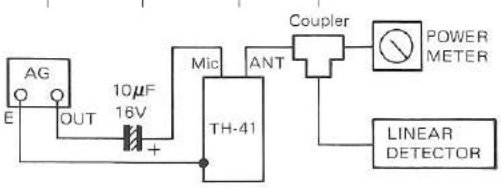

ADJUSTMENT

Item	Condition	Measurement			Adjustment			Specifications/ Remarks
		Test-equipment	Unit	Ter-minal	Unit	Part	Method	
3. Tone encoder **(K2,M3,M4)** Type only	1) f = 435.00MHz **(M4)** f = 445.00MHz **(K2,M3)** Transmit Push the "3" and "6" key.				DTMF	VR1	3.0kHz	±0.5kHz
			DTMF	T0			Confirm frq'	1471.9Hz±5Hz
	2) Push the "2" and "3" key. Transmit						Confirm Dev'	1.2kHz±0.5kHz
	3) Push the "1" and "2" key.			T0			Confirm frq'	701.3Hz±5Hz
4. Tone **(T,W)** type only	1) **(T)** type only : Shorted C7 (Tone unit) Transmit Tone switch : ON				TONE	VR1	1750Hz	±17.5Hz
			TONE	T0			Confirm Dev'	2.5kHz or more
5. Option tone unit (TU-6) used **(K,M,X)**	1) Transmit Tone switch : ON Linear detector : LPF (3kHz) ON				(TU-6)	VR1	0.5kHz	0.5–0.6kHz
6. TX. f adjustment	1) f = 435.00MHz **(M2,M4,T,W,X)** f = 445.00MHz **(K,M1,M3)** OFFSET switch : "S" Transmit	Power meter f. counter			RF	L22	435.00MHz **(M2,M4,T,W,X)** 445.00MHz **(K,M1,M3)**	Within ±100Hz
	2) +5kHz switch : ON					TC14	435.005MHz **(M2,M4,T,W,X)** 445.005MHz **(K,M1,M3)**	
	3) f = 439.98MHz **(M2,M4,X)** f = 449.98MHz **(K,M1,M3)** OFFSET switch : "–" Transmit					L23	434.98MHz **(M2,M4,X)** 444.98MHz **(K,M1,M3)** (f–5MHz)	
	4) +5kHz switch : ON					TC15	434.985MHz **(M2,M4,X)** 444.985MHz **(K,M1,M3)**	
	5) f = 430.00MHz **(M2,M4,X)** f = 440.00MHz **(K,M1,M3)** OFFSET switch : "+" Transmit					L21	435.00MHz **(M2,M4,X)** 445.00MHz **(K,M1,M3)** (f + 5MHz)	
	6) +5kHz switch : ON					TC13	435.005MHz **(M2,M4,X)** 445.005MHz **(K,M1,M3)**	
	7) **(W)** type only f = 439.98MHz OFFSET switch : "D–A"					L23	432.380MHz (f–7.6MHz)	
	8) +5kHz switch : ON					TC15	432.385MHz	
	9) **(W)** type only f = 439.98MHz OFFSET switch : "D–B"					L21	438.380MHz (f–1.6MHz)	
	10) +5kHz switch : ON					TC13	438.385MHz	
	11) **(T)** type only f = 435.00MHz OFFSET switch : "+"					L23	436.600MHz (f + 1.6MHz)	
	12) +5kHz switch : ON					TC15	436.605MHz	

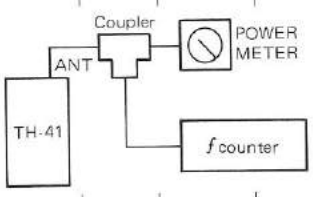

ADJUSTMENT

RX Section

Item	Condition	Measurement			Adjustment			Specifications/ Remarks
		Test-equipment	Unit	Ter-minal	Unit	Part	Method	
1. Sensitivity	1) f : any	f. counter	IF	Q1–2			Confirm	21.145MHz±320Hz
	2) SSG : 435.10MHz **(M2,M4,T,W,X)** 445.100MHz **(K,M1,M3)** –6dBμMOD : 1kHz DEV, 5kHz	SSG AF V.M Oscillo-scope 8Ω Dummy load		EXT.SP	RF	TC1–5 TC17, 16 L10	MAX.	
	SSG : 0dBμ				IF	L1	MAX.	
S/N	3) f = 430.04, 435.10, 439.94MHz **(M2,M4,T,W,X)** f = 440.04, 445.10 449.94 MHz **(K,M1,M3)**						Confirm	S/N 26dB or more

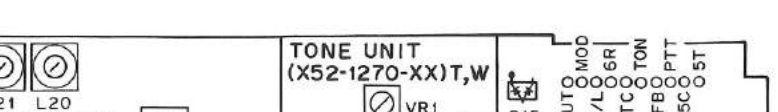

TOP VIEW

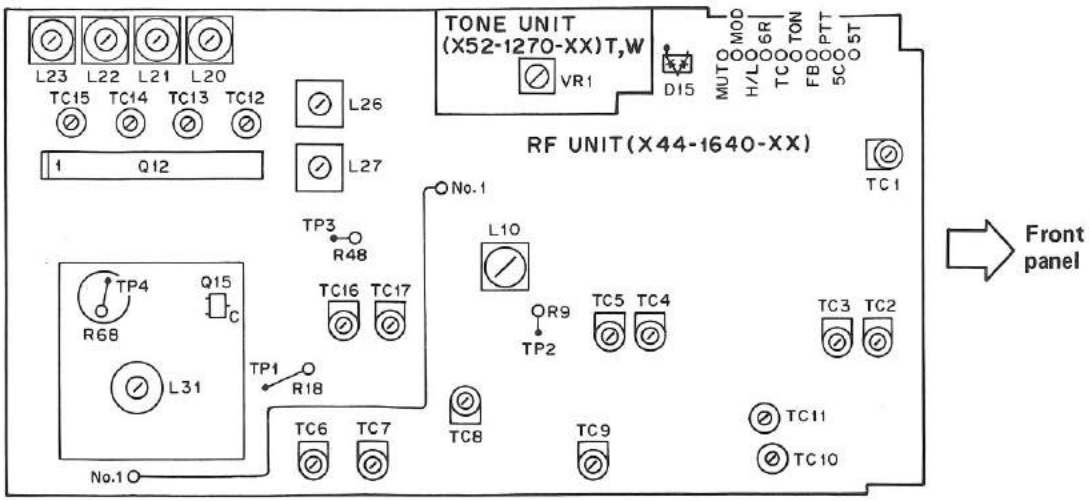

BOTTOM VIEW

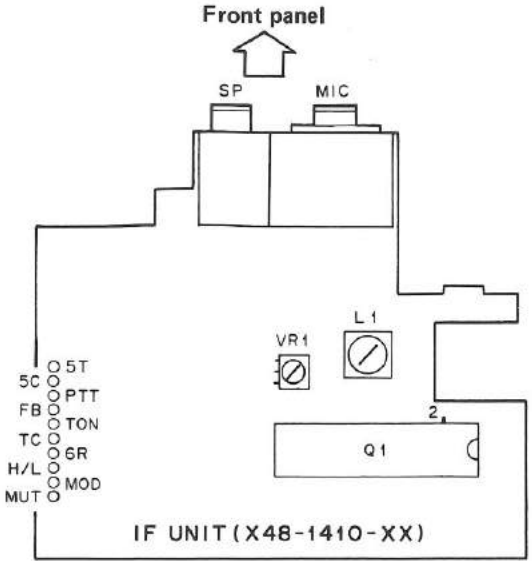

BT-2 (AAA MANGANESE/ALKALINE BATTERY CASE)/ EB-2 (EXTERNAL C MANGANESE/ALKALINE BATTERY CASE)/ PB-21 (Ni-Cd BATTERY)

BT-2 OUTSIDE VIEW

BT-2 DISASSEMBLY

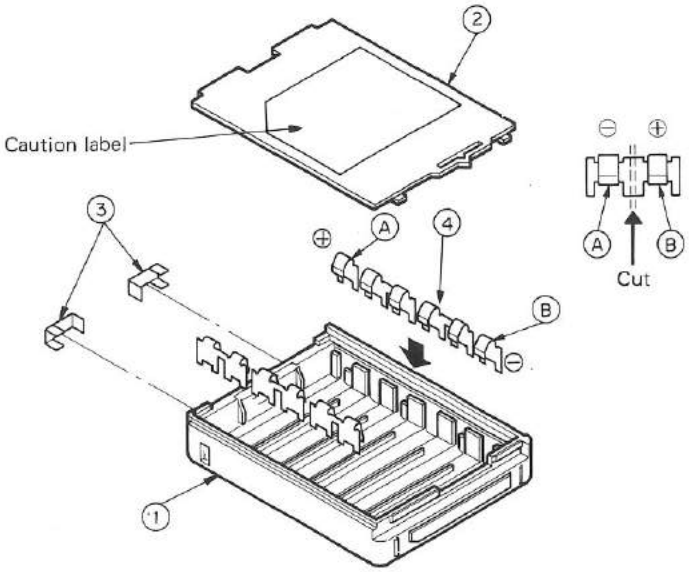

BT-2 PARTS LIST

Parts No.	Re-marks	Description	Ref. No.
A02-0677-02	*	Battery case	1
A02-0678-03	*	Battery case cover	2
E23-0451-04		Terminal board (A) x 2	3
E23-0452-04		Terminal board (B) x 6	4

EB-2 OUTSIDE VIEW

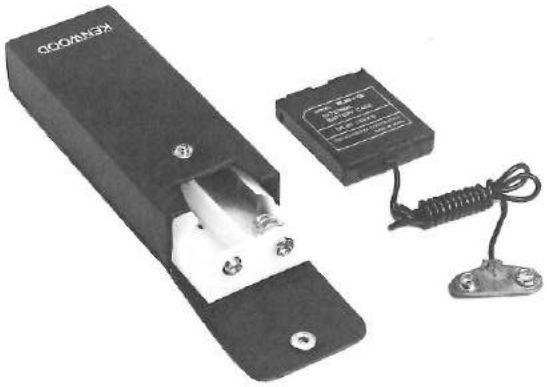

PB-21 OUTSIDE VIEW

EB-2 PARTS LIST

Parts No.	Re-marks	Description	Ref. No.
A02-0677-02	*	Battery case	
A02-0678-03	*	Battery case cover	
E23-0451-04		Terminal board (A) x 2	
E30-1793-05	N*	Cord ass'y	
H25-0103-04		Protective bag (Hard case)	
H25-0096-04		Protective bag (Battery case)	
J21-4154-04	N*	Fied plate (Cord bushing)	

PB-21 SPECIFICATIONS

Output voltage 7.2V
Charging current . . . . . 36mA (ordinary charging for approx. 8hrs.)
Charging current 180mAH
Dimensions . . . . . 57 (W) x 71 (H) x 14 (D) mm
Weight . . . . . Approx. 80g

DC-21 (DC-DC CONVERTER)/SC-8/8T (SOFT CASE)

DC-21 OUTSIDE VIEW

SC-8 OUTSIDE VIEW

DC-21 SPECIFICATIONS

Input voltage . . . . . 13.8V DC (12–16V)
Output voltage . . . . . 8V DC ±5%
Output current . . . . . 900mA (at input voltage of 13.8V DC with max. load)
Weight . . . . . Approx. 260g

SC-8T OUTSIDE VIEW

DC-21 PARTS LIST

Parts No.	Remarks	Description	Ref. No.
A02-0677-02	*	Battery case	
A02-0678-03	*	Battery case cover	
E03-0203-05		DC jack	J1
E23-0451-04		Terminal board (A) x 2	
E30-1791-05	N	Cord with plug	
E30-1796-05		Cord with cigarette plug and fuse	
F05-2023-05		Fuse 2A	
J42-0439-05		Cord bushing	
L15-0305-05		Choke coil 1mH	L1
NJM7808A		IC	IC1
SLH-34-VC3		LED (Red)	D3
U05B		Diode	D1
V06C		Diode	D2

SC-8/8T PARTS LIST

Parts No.	Remarks	Description	Ref. No.
J19-1408-04	N	Belt hook	

DC-21 SCHEMATIC DIAGRAM

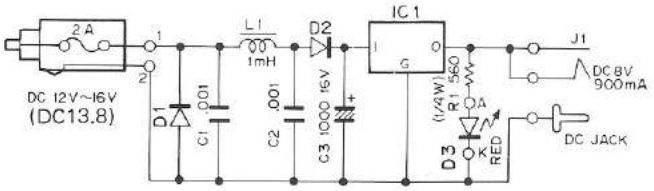

IC1 : NJM7808A
D1 : U05B
D2 : V06B
D3 : SLH34-VC3

HMC-1 (HEADSET WITH VOX)

HMC-1 OUTSIDE VIEW

HMC-1 PARTS LIST

Part NO.	Remarks	Description	Ref. NO.
E30-1790-08		Cord with plug	
CK73FB1E103K		Chip cap. 0.01	C1,11
CK73FB1H102K		Chip cap. 0.001	C7,8
CC73FSL1H102K		Chip cap. 0.001	C13
RD73FB2A103J		Chip resistor, 10kΩ	R1,13
RD73FB2A473J		Chip resistor, 47kΩ	R2,3,12,14
RD73FB2A101J		Chip resistor, 100Ω	R4
RD73FB2A333J		Chip resistor, 33kΩ	R5
RD73FB2A183J		Chip resistor, 18kΩ	R6
RD73FB2A472J		Chip resistor, 4.7kΩ	R7
RD73FB2A223J		Chip resistor, 22kΩ	R8
RD73FB2A224J		Chip resistor, 220kΩ	R9
RD73FB2A332J		Chip resistor, 3.3kΩ	R11

HMC-1 SPECIFICATIONS

Mic input sensitivity 1.5mV (1kHz)
Delay time . . . . . Approx. 1.2 sec.
DC current 3.5mA

HMC-1 SCHEMATIC DIAGRAM

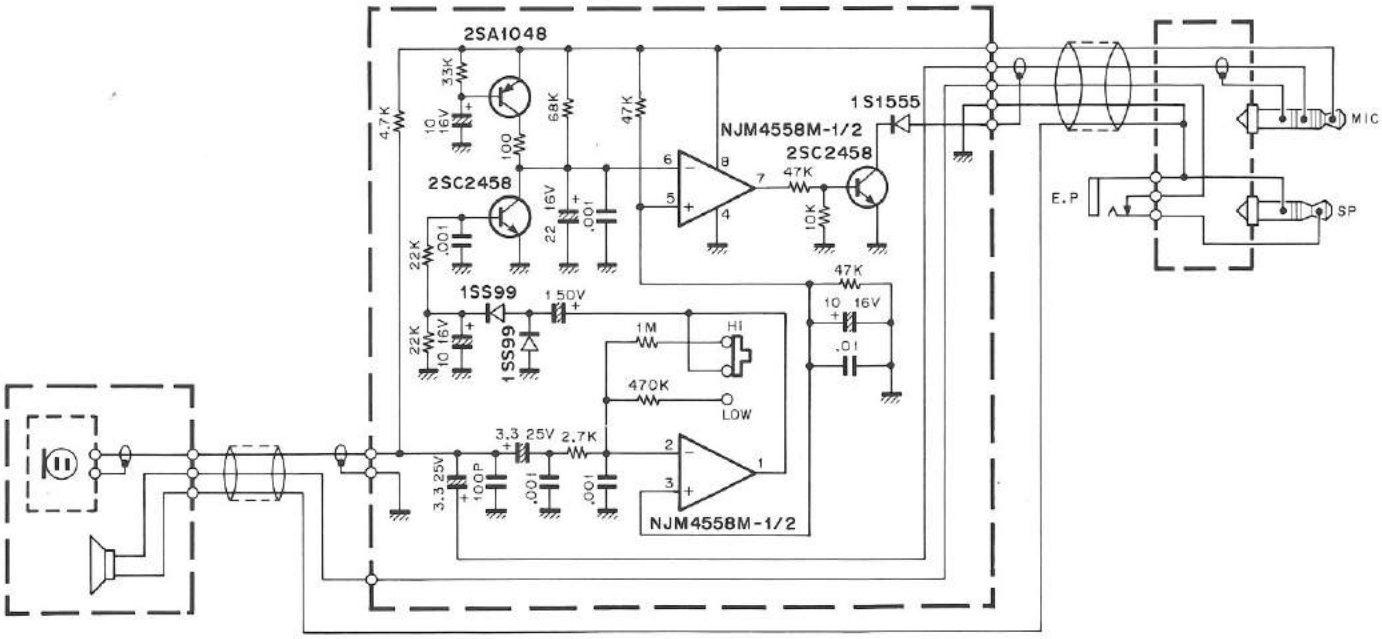

SMC-30 (SPEAKER MICROPHONE)/ TU-6 (PROGRAMABLE TONE ENCODER) TH-21A/AT ONLY

SMC-30 OUTSIDE VIEW

SMC-30 PARTS LIST

Parts No.	Remraks	Description	Ref. No.
E30-1789-05	N	Curled cord ass'y	
J19-1360-08 J42-0429-08		Clip metal fitting Cord bushing	
K29-3035-08	N	PTT knob	
S50-1408-08		Micro switch	
T07-0219-08 T97-1024-08		Speaker Electret microphone	

SMC-30 SCHEMATIC DIAGRAM

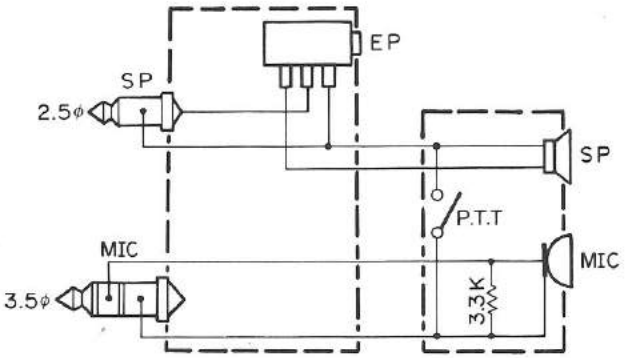

SMC-30 SPECIFICATIONS

- **SPEAKER**
  - **Speaker** 40mmφ
  - **Max. Input** 0.5W
  - **Input impedance** 8Ω
- **MICROPHONE**
  - **Type** . . . . . Electret condensor
  - **Sensitivity** . . . . . −67dB
  - **Output impedance** 2kΩ
  - **Frequency response** . . . 200Hz~5kHz
  - **Operating temperature** . . −20°C~+60°C
  - **Dimensions** . . . . . 51W x 73H x 33D (mm) (Projections excluded)
  - **Weight** . . . . . 130g (Code included)

TU-6 SCHEMATIC DIAGRAM

TU-6 (X52-1320-10)

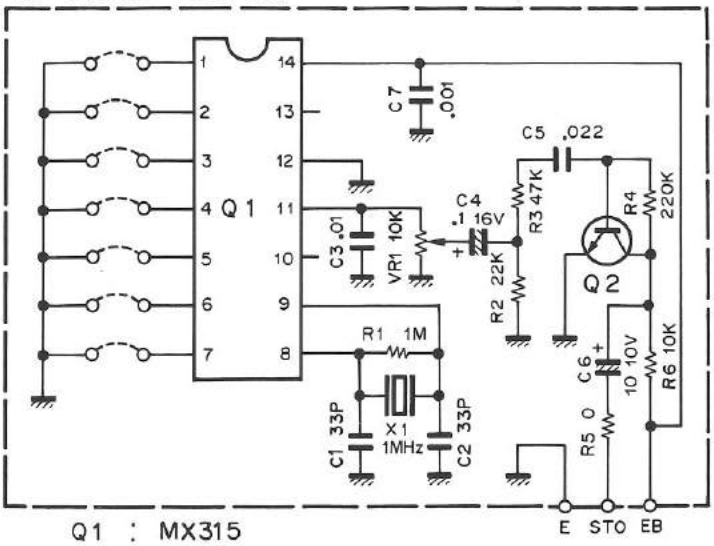

Q1 : MX315

Q2 : 2SC2412K(Q) or 2SC2712(Y)

2SC2412K
2SC2714

TU-6 (PROGRAMABLE TONE ENCODER) TH-21A/AT ONLY

TU-6 SPECIFICATIONS

Oscillator frequency . . . . . 1MHz ± 0.1%
Usable frequency range . . . . . 37 EIA Specification Group Frequencies (67.0–250.3Hz)
Weight 3g

TU-6 TONE FREQUENCY CHART

Setting the frequency

Cut and connect pins 1–6 of the IC to the PC board pattern by soldering to set the frequency.

- "0" in the table indicates the connection.
- "1" in the table indicates the disconnection.

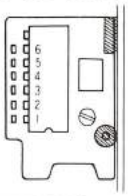

#	EIA Specification Group	Hz	Program Lines (ON...1, OFF...0) 1	2	3	4	5	6	#	EIA Specification Group	Hz	Program Lines (ON...1, OFF...0) 1	2	3	4	5	6
1	A	67.0	1	1	1	1	1	1	21	A	141.3	1	0	0	0	0	0
2	B	71.9	1	1	1	1	0	1	22	B	146.2	0	1	1	1	0	1
3	C	74.4	1	1	1	0	1	1	23	A	151.4	0	1	1	1	0	0
4	A	77.0	1	1	1	1	0	0	24	B	156.7	0	1	1	0	0	1
5	C	79.7	1	1	0	1	1	1	25	A	162.2	0	1	1	0	0	0
6	B	82.5	1	1	1	0	0	1	26	B	167.9	0	1	0	1	0	1
7	C	85.4	1	1	0	0	1	1	27	A	173.8	0	1	0	1	0	0
8	A	88.5	1	1	1	0	0	0	28	B	179.9	0	1	0	0	0	1
9	C	91.5	1	0	1	1	1	1	29	A	186.2	0	1	0	0	0	0
10	B	94.8	1	1	0	1	0	1	30	B	192.8	0	0	1	1	0	1
11	A	100.0	1	1	0	1	0	0	31	A	203.5	0	0	1	1	0	0
12	B	103.5	1	1	0	0	0	1	32	B	210.7	0	0	1	0	0	1
13	A	107.2	1	1	0	0	0	0	33	A	218.1	0	0	1	0	0	0
14	B	110.9	1	0	1	1	0	1	34	B	225.7	0	0	0	1	0	1
15	A	114.8	1	0	1	1	0	0	35	A	233.6	0	0	0	1	0	0
16	B	118.8	1	0	1	0	0	1	36	B	241.8	0	0	0	0	0	1
17	A	123.0	1	0	1	0	0	0	37	A	250.3	0	0	0	0	0	0
18	B	127.3	1	0	0	1	0	1									
19	A	131.8	1	0	0	1	0	0									
20	B	136.5	1	0	0	0	0	1									

TU-6 PARTS LIST

Parts No.	Remarks	Description		Ref. No.	Q'ty
TU-6 GENERAL					
B50-4178-00	N	Instruction manual			1
G13-0806-04	N	Cushion			1
H25-0029-04		Protective bag			1
X52-1320-10	N	Tone unit			1
TONE UNIT (X52-1320-10)					
CC73FCH1H330J		Chip cap.	33P	C1, 2	2
CE04CW1A100M		Electro	10 10V	C6	1
CK73FB1E103K		Chip cap.	0.01	C3	1
CK73FB1E223K		Chip cap.	0.022	C5	1
CK73FB1H102K		Chip cap.	0.001	C7	1
C90-0888-05		Tantalum	0.1 16V	C4	1
L77-0982-05		Crystal	1MHz	X1	1
RD73FB2A103J		Chip resistor	10kΩ	R6	1
RD73FB2A105J		Chip resistor	1MΩ	R1	1
RD73FB2A223J		Chip resistor	22kΩ	R2	1
RD73FB2A224J		Chip resistor	220kΩ	R4	1
RD73FB2A473J		Chip resistor	47kΩ	R3	1
R12-3449-05		Trim. pot.	10kΩ(B)	VR1	1
R92-0670-05		Chip resistor	0Ω	R5	1
MX315		IC		Q1	1
2SC1412K(Q) or 2SC2712(Y)		TR		Q2	1

TU-6 PC BOARD VIEW

TONE UNIT (X52-1320-10) Foil side view

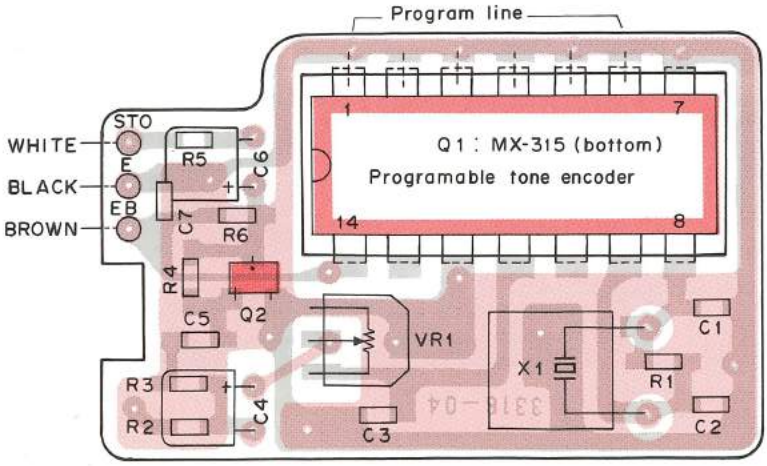

MX-315

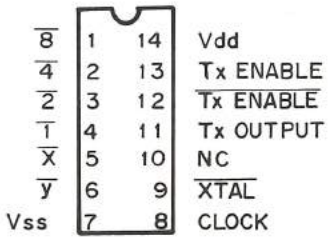

Q1 : MX315 Q2 : 2SC2412K(Q) or 2SC2712(Y)

WIRING/REFERENCE DATA

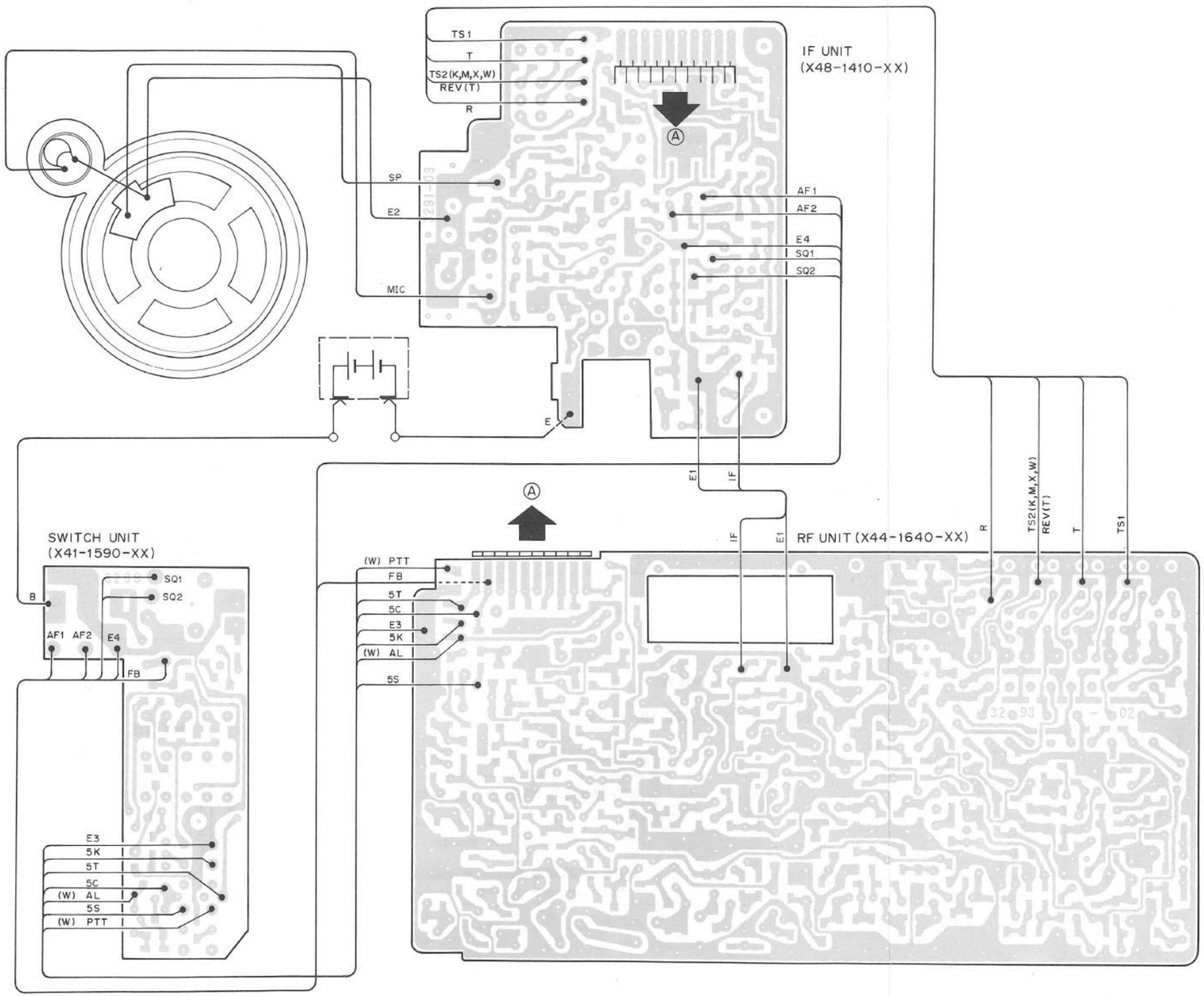

RX SENSITIVITY

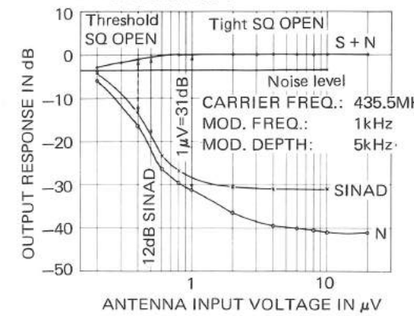

INTER MODULATION

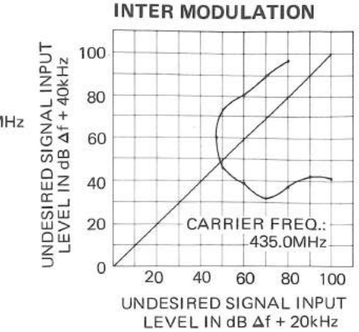

DEVIATION

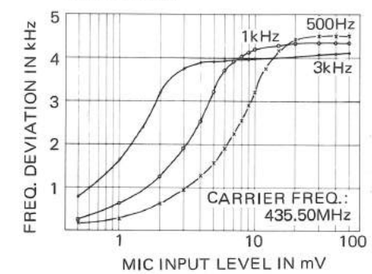

OUTPUT POWER

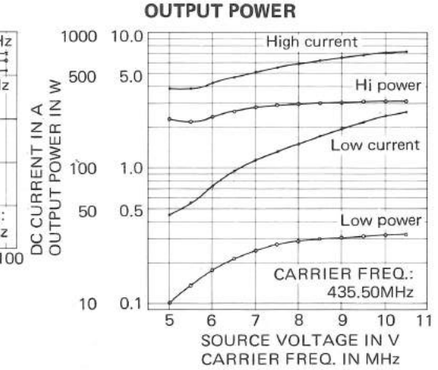

NEAR SPURIOUS RESPONSE

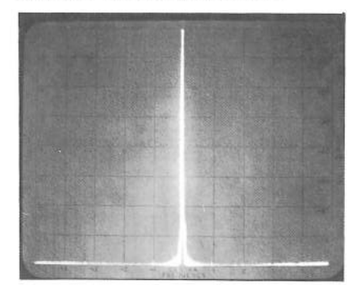

CARRIER FREQ.:	435.00MHz
RF POWER:	1.3W
SCAN WIDTH:	5MHz/DIV
BAND WIDTH:	30kHz
SCAN TIME:	0.5 SEC
VIDEO FILTER:	10kHz
INPUT ATT.:	0dB
LOG REF LEVEL:	−18dBm 10dB/DIV

HARMONICS SPURIOUS RESPONSE

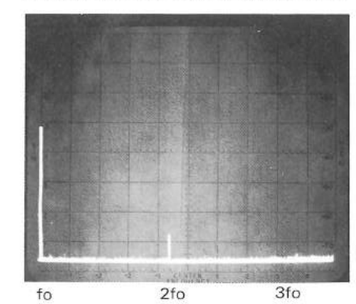

CARRIER FREQ.:	435.00MHz
RF POWER:	1.3W
SCAN WIDTH:	100MHz/DIV
BAND WIDTH:	30kHz
SCAN TIME:	2 SEC
VIDEO FILTER:	10kHz
INPUT ATT.:	0dB
LOG REF LEVEL:	−18dBm 10dB/DIV

The fundamental signal is reduced by HPF.
(fc : 550MHz)

TH-41A/AT SCHEMATIC DIAGRAM

Signal line — Control line — Common DC line — Voltage measurement conditions f = 439.99MHz, RX no signal. ( ) : TX.

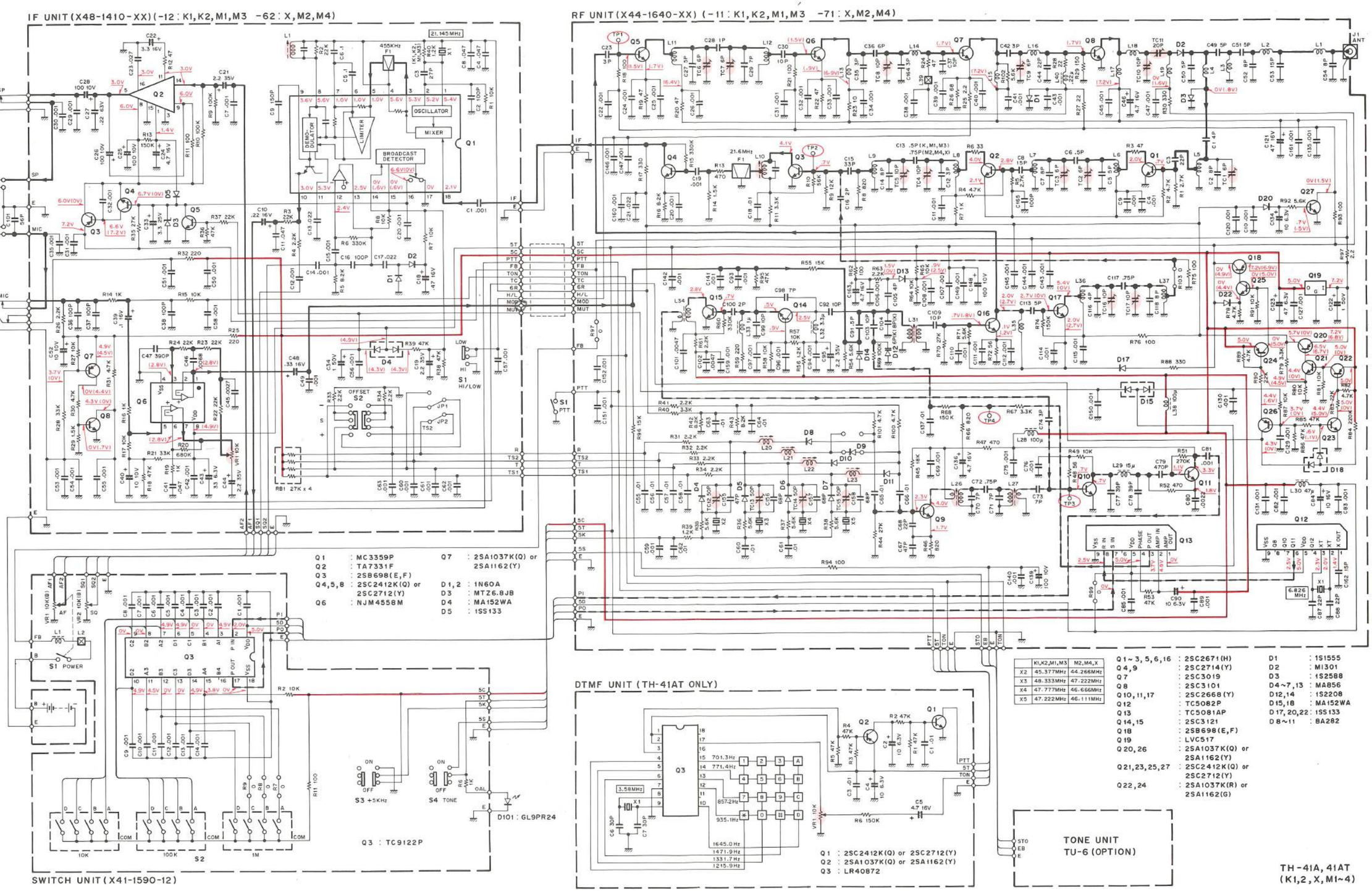

	K1,K2,M1,M3	M2,M4,X
X2	45.377MHz	44.266MHz
X3	48.333MHz	47.222MHz
X4	47.777MHz	46.666MHz
X5	47.222MHz	46.111MHz

TH-41E SCHEMATIC DIAGRAM

Signal line — Control line — Common DC line — Voltage measurement conditions f = 439.99MHz, RX no signal. ( ) : TX.

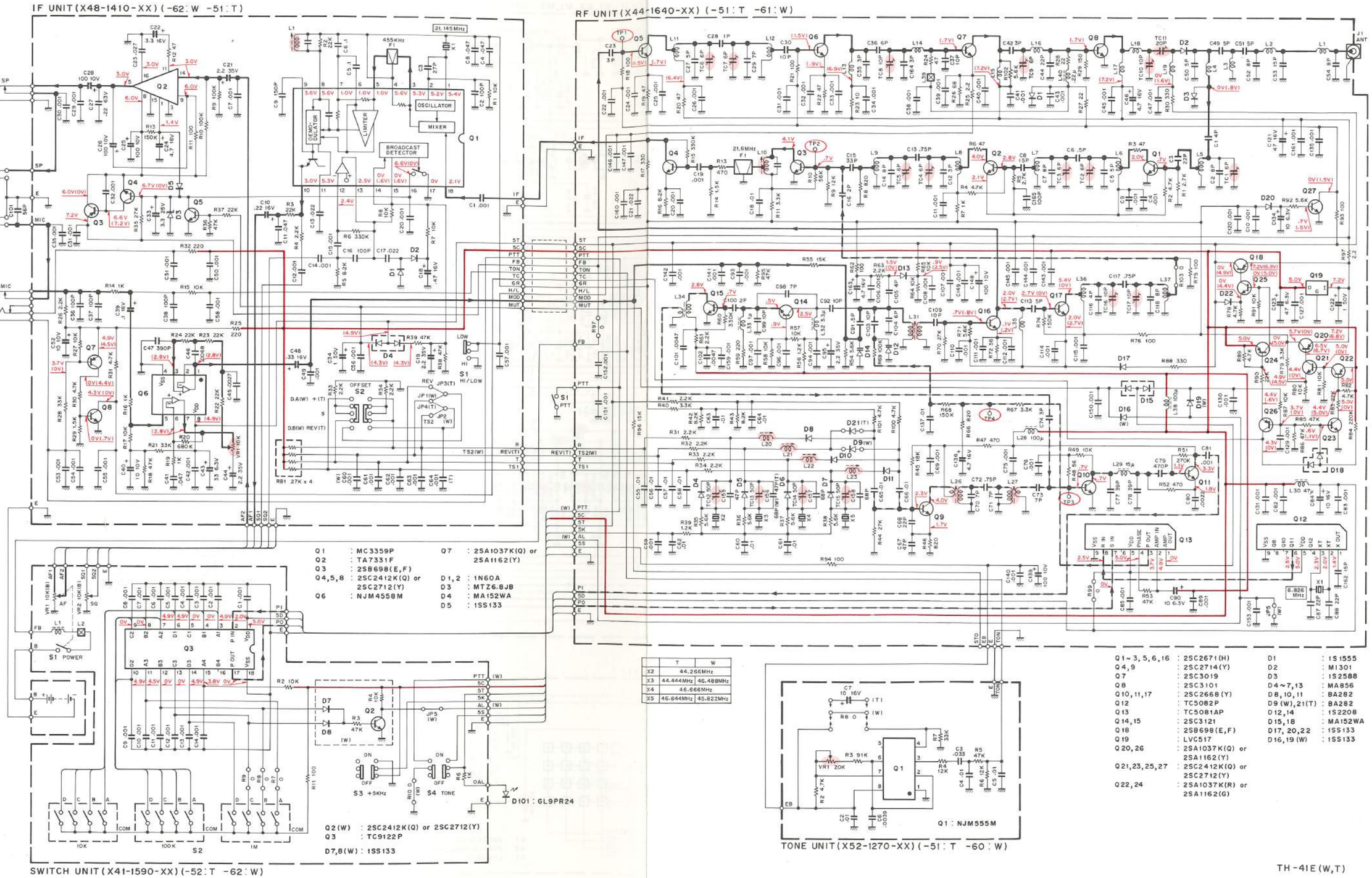

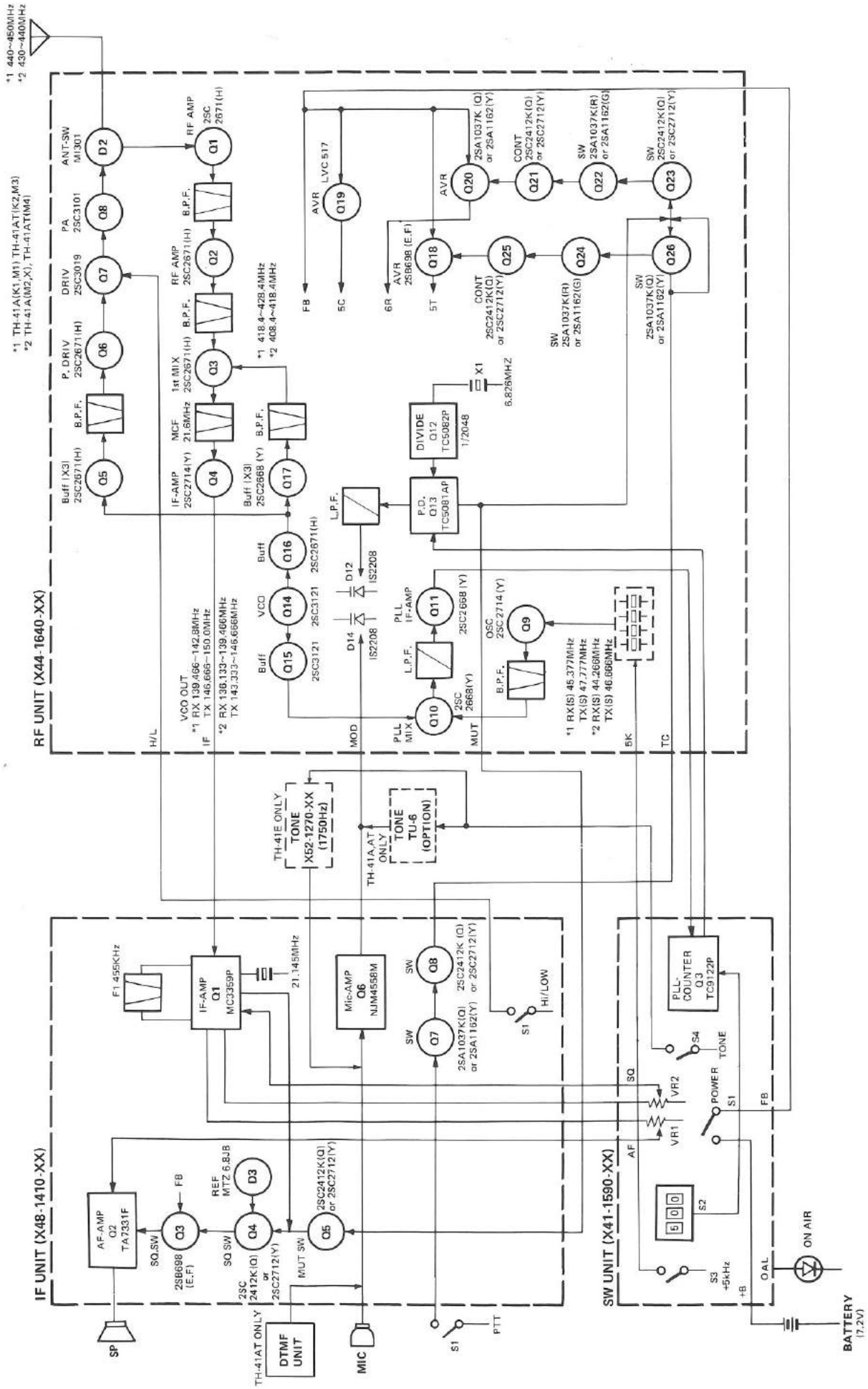
*1 440~450MHz
*2 430~440MHz
*1 TH-41A(K1,M1) TH-41AT(K2,M3)
*2 TH-41A(M2,X), TH-41AT(M4)
RF UNIT (X44-1640-XX)
ANT-SW M1301
PA 2SC3101
DRIV 2SC3019
P. DRIV 2SC2671(H)
B.P.F.
Buff (X3) 2SC2671(H)
IF-AMP 2SC2714(Y)
MCF 21.6MHz
1st MIX 2SC2671(H)
RF AMP 2SC2671(H)
RF AMP 2SC 2671(H)
Buff (X3) 2SC2668 (Y)
*1 418.4~428.4MHz
*2 408.4~418.4MHz
VCO OUT
*1 RX 139.466~142.8MHz
TX 146.666~150.0MHz
*2 RX 138.133~139.466MHz
TX 143.333~146.666MHz
Buff 2SC3121
VCO 2SC3121
Buff 2SC2671(H)
D12 1S2208
D14 1S2208
L.P.F.
PLL IF-AMP 2SC2668 (Y)
PLL MIX 2SC 2668(Y)
OSC 2SC 2714 (Y)
*1 RX(S) 45.377MHz
TX(S) 47.777MHz
*2 RX(S) 44.266MHz
TX(S) 46.666MHz
AVR LVC 517
AVR 2SB698 (E.F)
2SA1037K (Q) or 2SA1162(Y)
CONT 2SC2412K(Q) or 2SC2712(Y)
SW 2SA1037K(R) or 2SA1162(G)
SW 2SC2412K(Q) or 2SC2712(Y)
SW 2SA1037K(Q) or 2SA1162(Y)
X1 6.825MHZ
DIVIDE Q12 TC5082P 1/2048
P.D. Q13 TC5081AP
FB
5C
6R
5T
H/L
IF
MOD
MUT
5K
TC
TH-41E ONLY TONE X52-1270-XX (1750Hz)
TH-41A,AT ONLY TONE TU-6 (OPTION)
IF UNIT (X48-1410-XX)
F1 455KHz
IF-AMP Q1 MC3359P
21.145MHz
Mic-AMP Q6 NJM4558M
SW Q8 2SC2412K (Q) or 2SC2712(Y)
SW Q7 2SA1037K(Q) or 2SA1162(Y)
S1 Hi/LOW
AF-AMP Q2 TA7331F
SQ.SW
2SB698 (E.F)
Q3
FB
REF MTZ 6.8JB
D3
Q4
SQ SW
2SC 2412K(Q) or 2SC2712(Y)
Q5
MUT SW
TH-41AT ONLY DTMF UNIT
SP
MIC
S1 PTT
SW UNIT (X41-1590-XX)
PLL-COUNTER Q3 TC9122P
S4 TONE
SQ
VR2
VR1
AF
POWER S1
FB
S2
S3 +5kHz
+B
OAL
ON AIR
BATTERY (7.2V)

SPECIFICATIONS

General

Frequency range	430 – 440MHz (430MHz version) 440 – 450MHz (440MHz version)
Signal type	F3 (FM)
Operating temperature	−20°C ~ +50°C
Antenna impedance	50Ω
Power supply voltage	5.8V – 10.0V (rating voltage ; 7.2V)
Power consumption	At reception standby ; Less than 30mA At transmission (Hi) ; Less than 650mA (Low) ; About 350mA
Dimensions	57 (65.5) W x 120 (127.5) H x 28 (32) D mm The numbers in the parenthesis include projections parts.
Weight	Approx. 290h (including antenna and Ni-Cd batteries)

Transmitter section

Output power	Hi ; 1.0W, Low ; approx. 150mW
Modulation system	Reactance modulation
Max. frequency deviation	±5kHz
Unwanted reflection	Less than −60dB
Microphone	Condenser type

Receiver section

Reception system	Double superheterodyne
Intermediate frequency	1st ; 21.6MHz, 2nd ; 455kHz
Sensitivity	S/N more than 26dB at −6dBμ (0.5μV) input 12dB SINAD ; less than −12dBμ (0.25μV)
Squelch sensitivity	Less than 0.25μV
Selectivity	−6dB at more than 12kHz −40dB at less than 28kHz
AF output	More than 250mW (8Ω load, distortion 10%)

Design and specifications subject to change without notice.

TRIO-KENWOOD CORPORATION
Shionogi Shibuya Building, 17-5, 2-chome Shibuya, Shibuya-ku, Tokyo 150, Japan

TRIO-KENWOOD COMMUNICATIONS
1111 West Walnut Street, Compton, California 90220,U.S.A.

TRIO-KENWOOD COMMUNICATIONS
DIVISION OF TRIO-KENWOOD ELECTRONICS GmbH
Rembrücker Str. 15, 6056 Heusenstamm, West Germany

TRIO-KENWOOD ELECTRONICS, N.V.
Leuvensesteenweg 504, B-1930 Zaventem Belgium

TRIO-KENWOOD (AUSTRALIA) PTY. LTD. (INCORPORATED IN N.S.W.)
4E. Woodcock Place, Lane Cove, N.S.W. 2066, Australia

071-54176011