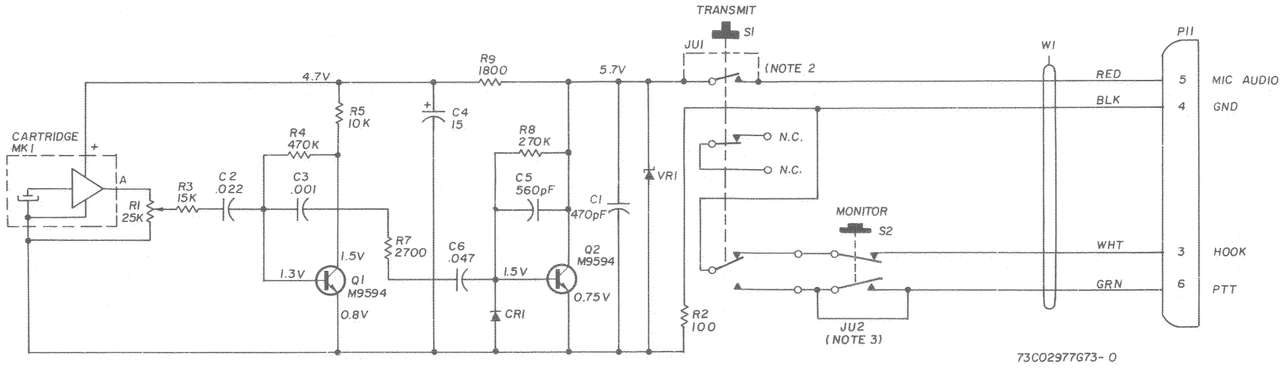

NOTES:

1. UNLESS OTHERWISE STATED: ALL CAPACITOR VALUES ARE IN MICROFARADS.
2. JU1 NORMALLY OUT.
3. JU2 IS NORMALLY IN.
4. ALL DC VOLTAGE READINGS ARE WITH RESPECT TO THE MIC LO LEAD.

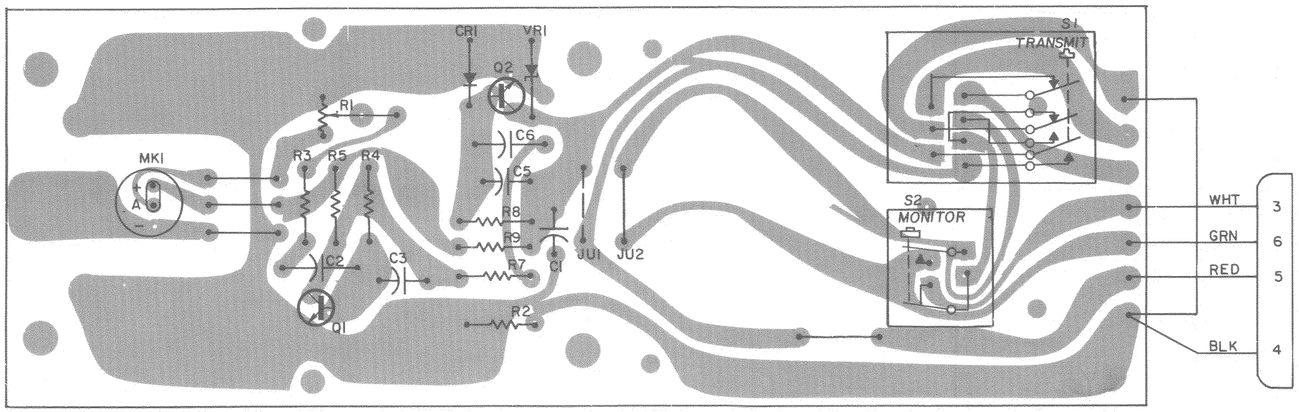

SHOWN FROM COMPONENT SIDE

OVERLAY ● 79C02978G54-0
COMPONENT SIDE ● 79C02978G55-0

TRANSISTOR BASE DETAIL

DESK MICROPHONE
MODEL HMN1038A

parts list

HHN4021A Housing & Hardware Kit

REFERENCE NUMBER	MOTOROLA PART NO.	DESCRIPTION
S1, S2	40-84711E03	switch, microphone leaf
	non-referenced items	
	2-10101A69	NUT, spring: 2 used
	3-135102	SCREW, switch mtg.: 4-40 x 1/4", 3 used
	3-138809	SCREW, baseplate: 4-40 x 5/16", 4 used
	3-140047	SCREW, front cover: 4-20 x 5/8", 2 used
	3-140251	SCREW, front cover: 4-20 x 3/4", 2 used
	4-10058B10	WASHER, Teflon
	15-82976M04	COVER, front
	15-82978M04	COVER, rear
	15-84191E03	HOUSING, microphone
	38-84184E08	BUTTON
	38-84192E06	BUTTON
	42-82143C05	CLAMP, cable
	42-84725E01	CLIP, shaft retainer
	47-84193E01	SHAFT, button mtg. pivot
	47-84194E01	SHAFT, extension
	64-82977M01	PLATE, base
	75-84722E01	PAD, base plate

HLN4436A Microphone Circuit Board PL-8346-0

REFERENCE NUMBER	MOTOROLA PART NO.	DESCRIPTION
		capacitor, fixed: uF ± 10%; 500 V: unless otherwise stated
C1	21-82187B45	470 pF
C2	8-82096J08	.022; 250 V
C3	21-82187B44	.001; 100 V
C4	23-84665F09	15 + 150 − 10%; 25 V
C5	21-82187B06	560 pF
C6	8-82096J04	.047; 250 V
		diode: (see note)
CR1	48-83654H01	silicon
		cartridge, microphone:
MK1	50-82825M02	electret
		transistor: (see note)
Q1, 2	48-869594	NPN; type M9594
		resistor, fixed: ± 5%; 1/4 W: unless otherwise stated
R1	18-84944C02	variable: 25k ± 20%
R2	6-11009C25	100
R3	6-11009C77	15k
R4	6-11009D14	470k
R5	6-11009C73	10k
R7	6-11009C59	2.7k
R8	6-11009D08	270k
R9	6-11009C55	1.8k
		diode: (see note)
VR1	48-82256C38	Zener; 9.1 V ± 5%

note: For optimum performance diodes, transistors and integrated circuits must be ordered by Motorola part numbers.

HKN4291A Microphone Cable Kit

REFERENCE NUMBER	MOTOROLA PART NO.	DESCRIPTION
W1	30-80152H06	CABLE, coiled: (includes connector P11)