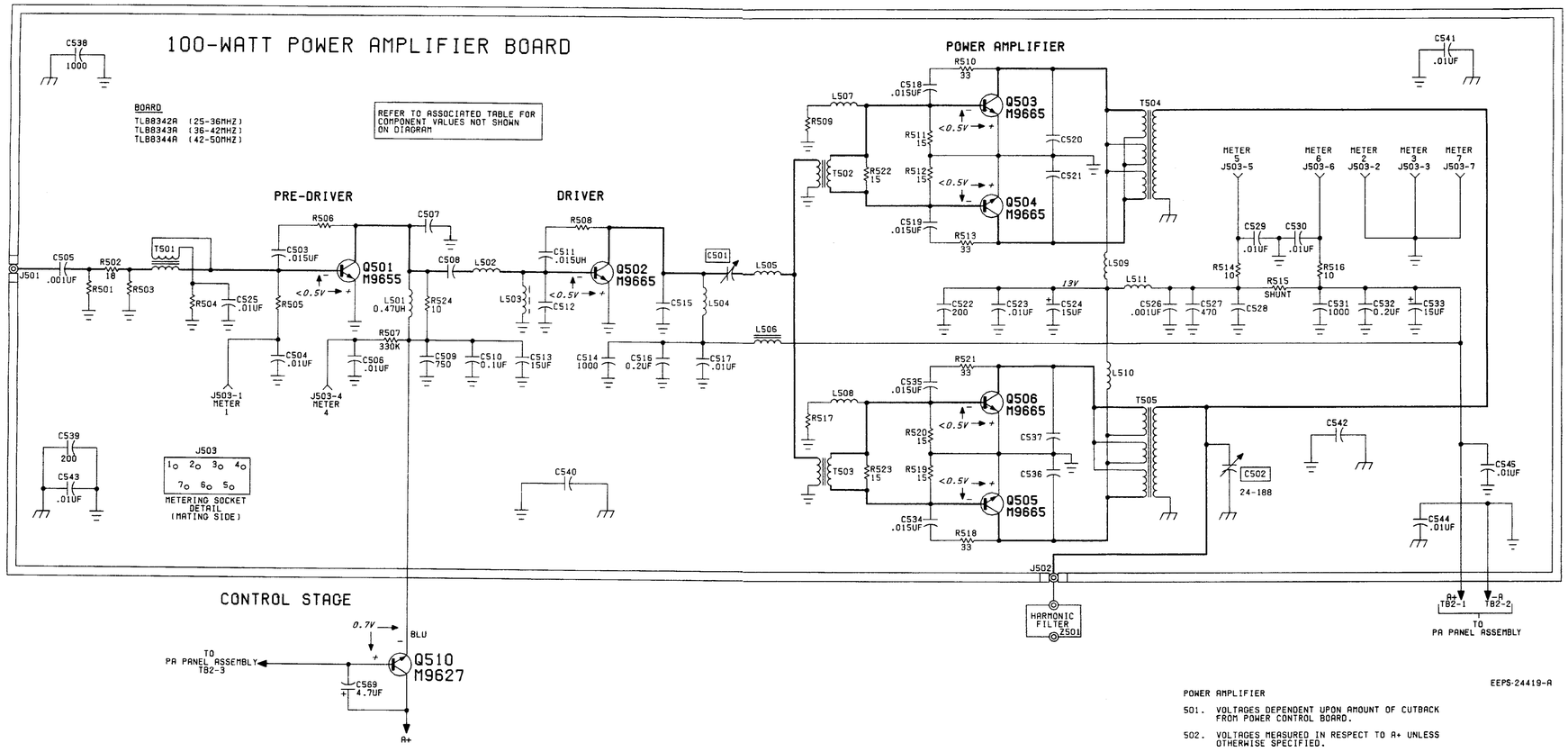

POWER AMPLIFIER

501. VOLTAGES DEPENDENT UPON AMOUNT OF CUTBACK FROM POWER CONTROL BOARD.

502. VOLTAGES MEASURED IN RESPECT TO A+ UNLESS OTHERWISE SPECIFIED.

503. UNLESS OTHERWISE SPECIFIED: CAPACITOR VALUES ARE PICOFARADS.

504. COMPONENTS WITHOUT VALUES ARE DEFINED BY PA COMPONENT VALUES TABLE.

PA COMPONENT VALUES

REFERENCE SYMBOL	25-36MHZ	36-42MHZ	42-50MHZ
C501	170-560	90-376	90-376
C507	NOT USED	150	250
C508	510	510	310
C512	200	200	470
C515	270	220	470
C520	100	150	60
C521	100	60	60
C528	.05UF	.01UF	.01UF
C536	150	60	60
C537	100	60	60
C540	.01UF	.056UF	.056UF
C542	.056UF	.0047UF	.0047UF
L502	1/2 TURN	1/2 TURN	1-1/2 TURN
L505	2-1/2 TURNS	1-1/2 TURNS	1-1/2 TURNS
L507	0.29UH	0.29UH	0.41UH
L508	0.29UH	0.29UH	0.41UH
L509	5-1/2 TURNS	4-1/2 TURNS	4-1/2 TURNS
L510	5-1/2 TURNS	4-1/2 TURNS	4-1/2 TURNS
R501	300	300	NOT USED
R503	300	300	NOT USED
R504	10	10	1.8
R505	6.8K	6.8K	1K
R506	33	33	220
R508	33	150	150
R509	10	1	10
R517	10	1	10

REVISIONS

CHASSIS & SUFFIX NO.	REF. SYMBOL	CHANGE	LOCATION
TLB8344A-2	R505	FROM 6-124A69 6.8k TO 6-11009C49 1k	PARTS LIST
	R504	FROM 6-125C01 10 OHM TO 6-125D72 1.8 OHM	
	R509, R117	FROM 6-125D70 1 OHM TO 6-125C01 10 OHM	
	C507H	FROM 21-84494B04 100 pF TO 21-84857K29 250 pF	
	C508H	FROM 21-84494B49 200 pF TO 21-84857K46 310 pF	
	C512H	FROM 21-84426B45 280 pF to 21-84857K50 470 pF	
	C515H	FROM 21-84494B07 150 pF TO 21-82537B06 470 pF	
	L502	FROM 24-84146E01 1/2 TURN TO 24-84614A04 1-1/2 TURN	
	L507, L508	FROM 24-82723H04 0.29 uH TO 24-82723H05 0.41 uH	

PARTS LISTS SHOWN ON BACK OF THIS DIAGRAM

100-Watt Power Amplifier
Schematic Diagram
Motorola No. **63P81036E41-A**
10/31/86- PHI