NOTES:

1001. CIRCLED NUMBERS INDICATE LOCATIONS AT WHICH TO OBSERVE WAVEFORMS ON AN OSCILLOSCOPE.

1002. VOLTAGES--
A. FL = FULL LOAD (APPROX. 30 AMPS).
B. NL = NO LOAD.
C. VOLTAGES SHOWN IN PARENTHESIS ARE PRESENT DURING THE START ATTEMPT ONLY. ALL OTHERS ARE PRESENT DURING THE RUN CONDITION.
D. VOLTAGES ARE TYPICAL AND DO NOT CHANGE SIGNIFICANTLY FROM LOAD TO NO-LOAD CONDITIONS UNLESS OTHERWISE INDICATED.
E. ALL VOLTAGES ARE MEASURED WITH AN 11 MEGOHM INPUT RESISTANCE VOLTMETER IN RESPECT TO CHASSIS GROUND.

1003. UNLESS OTHERWISE STATED, CAPACITOR VALUES ARE IN MICROFARADS.

1004. UNLESS OTHERWISE STATED, RESISTOR VALUES ARE IN OHMS.

1005. 12 VOLT BATTERY TO BE SUPPLIED BY CUSTOMER.

1006. R1097, R1098, R1104, & R1105 ARE A THICK-FILM RESISTOR NETWORK.

EPS-10559-O

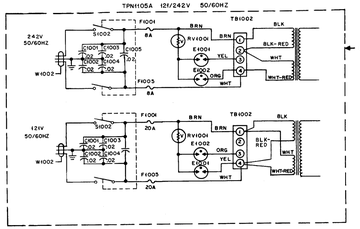

OR

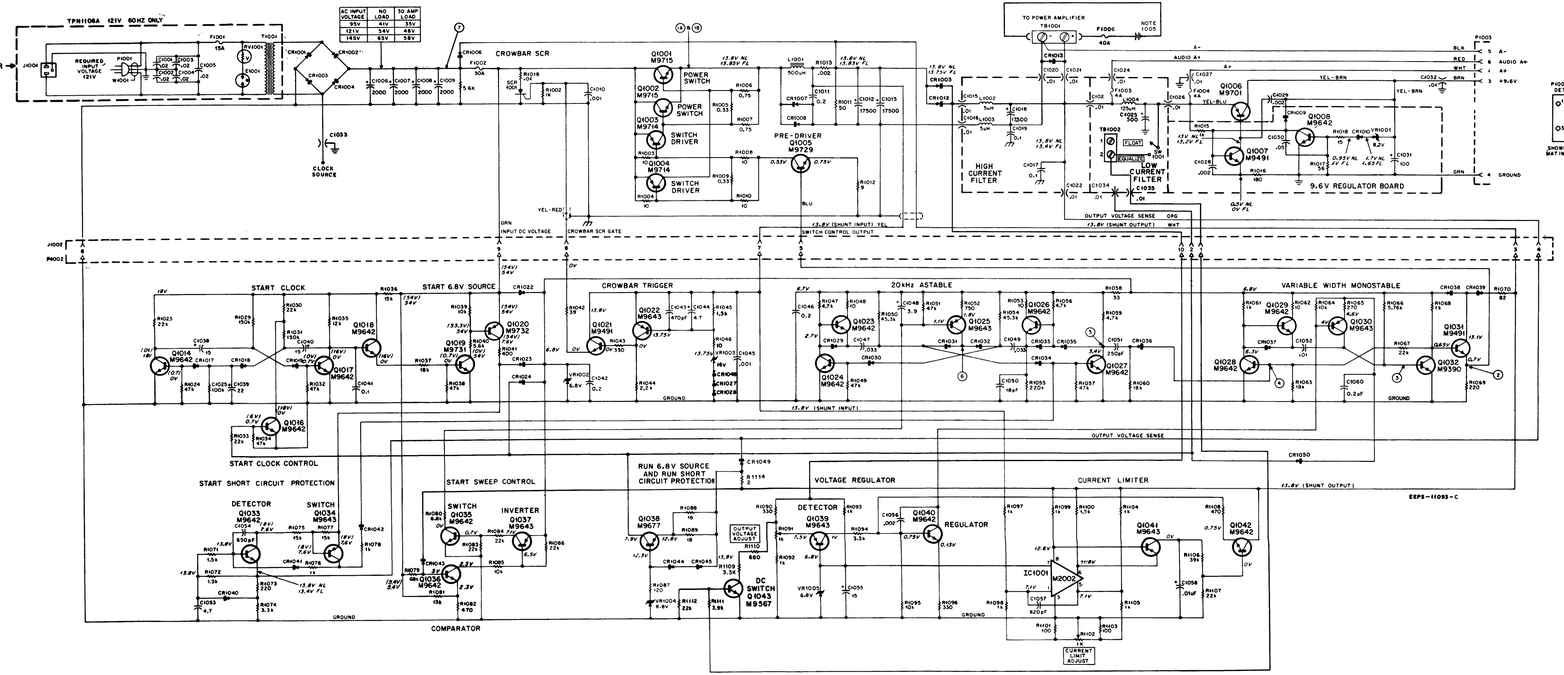

9.6 VOLT REGULATOR BOARD

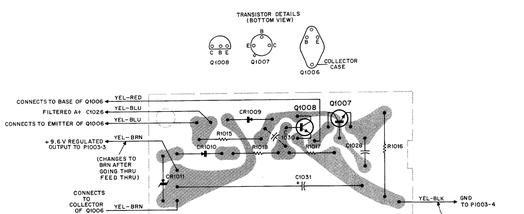

OSCILLOSCOPE WAVEFORMS MEASURED UNDER FOLLOWING CONDITIONS:

1. VERTICAL SENSITIVITY AND HORIZONTAL DEFLECTION, AND POWER SUPPLY LOAD CONDITION SHOWN WITH EACH WAVEFORM.
2. NOMINAL INPUT VOLTAGE APPLIED (121 V AC).

EPS-5945-O

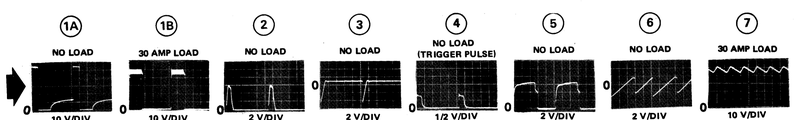

PARTS LIST SHOWN ON BACK OF THIS DIAGRAM

TPN1105A & TPN1106A Power Supply/Battery Charger
Schematic Diagram and 9.6 V Regulator Board
Circuit Board Detail
Motorola No. 63P81104E93-A
11/11/75-UP