MIDLAND LMR
LAND MOBILE RADIO

BASE-TECH SERVICE MANUAL

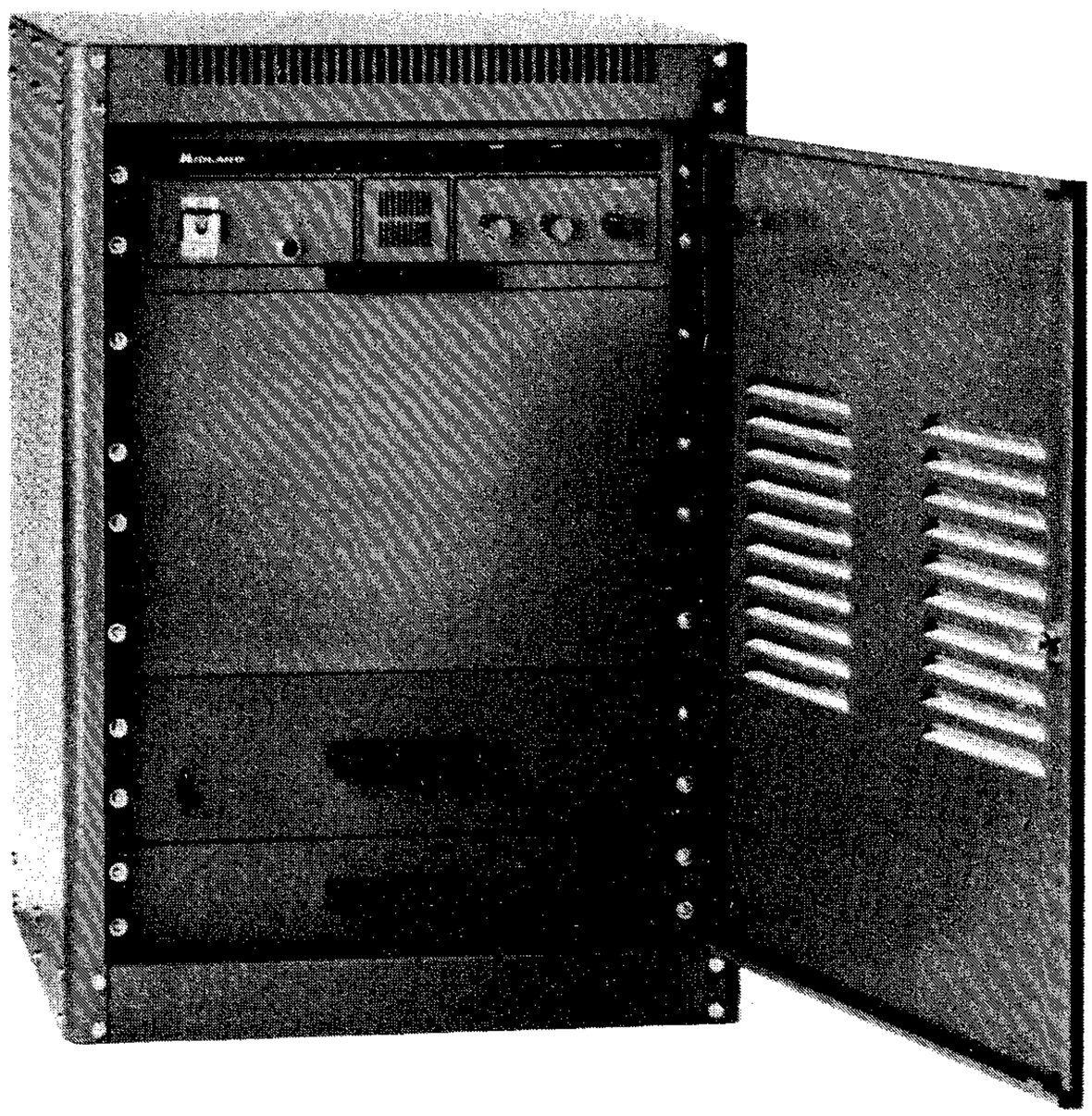

PART TWO:
FREQUENCY-DEPENDENT ITEMS ONLY

71-4050 UHF 50-WATT STATION
71-4120 UHF 120-WATT STATION

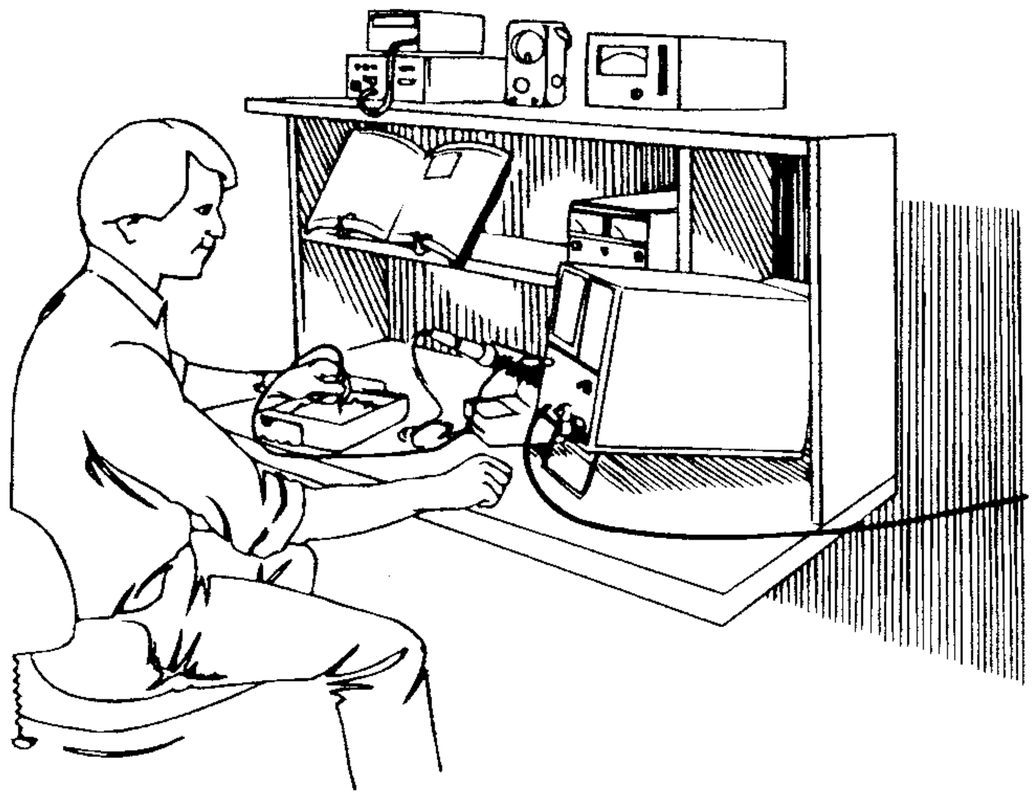

71 -405413
7/94

PRINTED IN U.S.A.

BASE-TECH SERVICE MANUALS

BASE-TECH service information is published in two parts.

Part One contains operating and servicing information for non-frequency dependent equipment which is common to the entire BASE-TECH line.

Part Two contains technical data and drawings for the BASE-TECH Transmitter, Receiver, and RF Power Amplifier units. There are different versions of Part Two for each of the various frequency bands.

This service-manual section is Part Two, and it contains specific technical data and drawings for the Transmitter, Receiver, and Power Amplifier Units used in the 71-4050, and 71-4120 Base-Tech UHF stations. Specifications and troubleshooting procedures for these UHF stations is also included herein.

As necessary, service manual supplements will be published and distributed on the following:

Manual Addition (MA): . . . . . For supplemental information useful in product alignment, service, or improvement. Printed on BLUE paper.

Change Notice (CN): . . . . . For circuitry change details made during production by model and serial number. Printed on YELLOW paper.

Manual Correction (MC): . . . . . For correcting literature errors not related to production changes. Printed on GREEN paper.

Technical Bulletin (TB):. . . . . For solutions to field problems and tips for performance improvement. Printed on PINK paper.

Comments and suggestions concerning areas of manual improvement are welcome.

TABLE OF CONTENTS

BASE-TECH Service Manuals ii
Table of Contents iii

SECTION 1 SPECIFICATIONS
General . . . . . 1 - 3
71-5051 Exciter . . . . . 1 - 3
Transmitter (entire station) . . . . . 1 - 4
71-5052 Receiver . . . . . 1 - 5

SECTION 2 Troubleshooting Charts
Troubleshooting Charts . . . . . 2 - 3

SECTION 3 71-5051 Exciter
71-5051Circuit Description . . . . . 3 - 3
DC Voltages . . . . . 3 - 5
71-5051Alignment . . . . . 3 - 7
71-5051Block Diagram . . . . . 3 - 11
PAT-436 Layout . . . . . 3 - 12
PAT-436 Schematic . . . . . 3 - 12
ML-404 Layout . . . . . 3 - 13
ML-404 Schematic . . . . . 3 - 13
Z-515 Layout . . . . . 3 - 13
LOT-409 Layout . . . . . 3 - 14
MD-4014 Layout — Bottom View . . . . . 3 - 15
MD-4014 Layout — Top View . . . . . 3 - 16
71-5051 Schematic . . . . . 3 - 17
71-5051 Exploded View . . . . . 3 - 18
71-5051 Parts . . . . . 3 - 19

SECTION 4 71-5052 Receiver
71-5052 Circuit Description . . . . . 4 - 3
DC Voltages . . . . . 4 - 5
71-5052 Alignment . . . . . 4 - 6
71-5052 Block Diagram . . . . . 4 - 9
RF Amplifier Layout . . . . . 4 - 10
Standard RF Amplifer Schematic . . . . . 4 - 10
71-7600 Pre-Amplifer Option Schematic . . . . . 4 - 10
MXR-401 Schematic . . . . . 4 - 11
MXR-401 Layout . . . . . 4 - 11
LOR-408 Layout . . . . . 4 - 12
DM-201 Layout — Bottom View . . . . . 4 - 13
DM-201 Layout — Top View . . . . . 4 - 14
71-5052 Schematic . . . . . 4 - 15
71-5052 Exploded View . . . . . 4 - 16
71-5052 Parts . . . . . 4 - 17

SECTION 5 **71-5300 50-Watt Power Amplifier**
71-5300 Circuit Description ..... 5 - 3
DC Voltages ..... 5 - 4
71-5300 Alignment ..... 5 - 5
71-5300 Block Diagram ..... 5 - 8
Z-453 Layout ..... 5 - 9
Z-455 Layout ..... 5 - 9
PA-438 Layout ..... 5 - 10
71-5300 Schematic ..... 5 - 11
71-5300 Exploded View ..... 5 - 12
71-5300 Part List ..... 5 - 13

SECTION 6 **71-5400 120-Watt Power Amplifier**
71-5400 Circuit Description ..... 6 - 3
DC Voltages ..... 6 - 4
71-5400 Alignment ..... 6 - 5
71-5400 Block Diagram ..... 6 - 8
Z-453 Layout ..... 6 - 9
Z-454 Layout ..... 6 - 9
Z-456 Layout ..... 6 - 9
PA-437 Layout ..... 6 - 10
71-5400 Schematic ..... 6 - 11
71-5400 Exploded View ..... 6 - 12
71-5400 Part List ..... 6 - 13

SECTION 1 — Specifications 1

SECTION 2 — Troubleshooting Charts 2

SECTION 3 — 71-5051 UHF Exciter 3

SECTION 4 — 71-5052 UHF Receiver 4

SECTION 5 — 71-5300 50-Watt Power Amplifier 5

SECTION 6 — 71-5400 120-Watt Power Amplifier 6

ACRONYMS AND ABBREVIATIONS

Below is a list of common electrical acronyms and abbreviations used in this manual.

ANI	Automatic Number Identification
CTCSS	Continuous Tone-Controlled Squelch System
DCS (or CDCSS)	Continuous Digital-Controlled Squelch System
DTMF	Dual Tone Multi-Frequency
E^2PROM	Electrically Erasable Programmable Read Only Memory
MIL	Military Specification
RX	Receive
SINAD	The ratio in decibels of signal + noise + distortion to noise + distortion
TX	Transmit
VCO	Voltage Controlled Oscillator

SECTION 1

SPECIFICATIONS

NOTES

Refer to EIA RS-152B, EIA RS-204C, and DOC-119 Issue 3 for standard of performance and method of measurement.

GENERAL

FREQUENCIES OF OPERATION:	
A-Band:	406—430 MHz
B-Band:	450—470 MHz
OPERATING VOLTAGE:	117 or 240 VAC ±10%, 50/60 Hz, single phase
OPERATION DUTY RATING:	Continuous
CHANNEL CAPACITY:	
Standard:	4 TX, 4 RX
Optional:	8 TX, 8 RX
CHANNEL FREQUENCY SPREAD (without retuning):	
TX:	6 MHz
RX:	2 MHz
TEMPERATURE RANGE:	–30°C to 60°C (–22°F to +140°F)
ANTENNA IMPEDANCE:	50 Ω unbalanced
FREQUENCY CONTROL:	Individual Temperature Compesated Crystal Oscillator (TCXO) module for each channel, TX and RX.

71-5051 EXCITER

OUTPUT POWER:	5 W (adjustable)
CURRENT CONSUMPTION:	
Transmit:	2 A (13.8 VDC)
Standby:	0.2 A (13.8 VDC)
SPURIOUS AND HARMONIC EMISSIONS:	
Spurious:	–85 dB
Harmonics:	–60 dB
TRANSMITTER SIDEBAND SPECTRUM:	
Fc 25 kHz:	–85 dB
Fc 1 MHz:	–97 dB

TRANSMITTER (entire station)

OUTPUT POWER:	
71-4050:	adjustable from 30 W to 50 W
71-4120:	adjustable from 90 W to 120 W
CHANNEL FREQUENCY SPREAD WITHOUT RETUNING:	6.0 MHz maximum
CHANNEL SPACING:	25 kHz
FREQUENCY CONTROL:	TCXO
EMISSION TYPE:	16F3
FREQUENCY STABILITY:	±2 ppm
CURRENT CONSUMPTION:	
71-4050:	11 A (13.4 VDC)
71-4120:	30 A (13.4 VDC)
SPURIOUS AND HARMONIC EMISSIONS:	–85 dB
TRANSMITTER SIDEBAND NOISE:	–85 dB
FM HUM AND NOISE:	55 dB
AUDIO FREQUENCY RESPONSE:	750 µs pre-emphasis, per EIA
AUDIO HARMONIC DISTORTION:	2%

71-5120 RECEIVER

AUDIO OUTPUT:	12 W into 4 Ω
12 dB SINAD SENSITIVITY:	
without Preamp:	0.35 μV
with 71-7600 Preamp:	0.20 μV
20 dB QUIETING SENSITIVITY:	
without Preamp:	0.50 μV
with 71-7600 Preamp:	0.35 μV
THRESHOLD SQUELCH SENSITIVITY:	
without Preamp:	0.2 μV
with 71-7650 Preamp:	0.15 μV
TIGHT SQUELCH SENSITIVITY:	0.8 μV to 1.2 μV (adjustable)
SELECTIVITY:	90 dB at 25 kHz off carrier
INTERMODULATION :	
without Preamp:	85 dB
with 71-7650 Preamp:	80 dB
SPURIOUS AND IMAGE REJECTION:	100 dB
VARIATION OF SENSITIVITY:	±3 kHz
AUDIO FREQUENCY RESPONSE:	750 μs de-emphasis, per EIA
AUDIO HARMONIC DISTORTION:	3% at 12 W

NOTES

SECTION 2

TROUBLESHOOTING CHARTS

NOTES

TROUBLESHOOTING CHARTS

When repairing the UHF Base-Tech, refer to the following Troubleshooting Charts.

TRANSMITTER

Transmitter Troubleshooting 2-4
Transmitter Overall Performance Test 2-5
Antenna VSWR Test 2-7
System Output Power Test 2-8
MD-4014 Test 2-9
MD-4014 Troubleshooting 2-11
LOT Test 2-15
LOT-409 Troubleshooting 2-16
ML-404 Test 2-18
ML-404 Troubleshooting 2-19
PAT-436 Test 2-20
PAT-436 Troubleshooting 2-21
TX Audio Troubleshooting 2-22
TX Switch Troubleshooting 2-23

RECEIVER

Receiver Troubleshooting 2-24
71-7600 Troubleshooting 2-26
RF-4012 Troubleshooting 2-27
LOR-408 Test 2-28
LOR-408 Troubleshooting 2-29
MXR-401 Troubleshooting 2-31
DM-201 Troubleshooting 2-32
RX Audio Troubleshooting 2-35
RX Switch Troubleshooting 2-36

MISCELLANEOUS

71-5051 DC Power-Line Check 2-37
71-5052 DC Power-Line Check 2-38
71-5300/5400 DC Power-Line Check 2-39
71-5300/5400 Troubleshooting 2-40
Control Panel DC Power-Line Troubleshooting 2-42

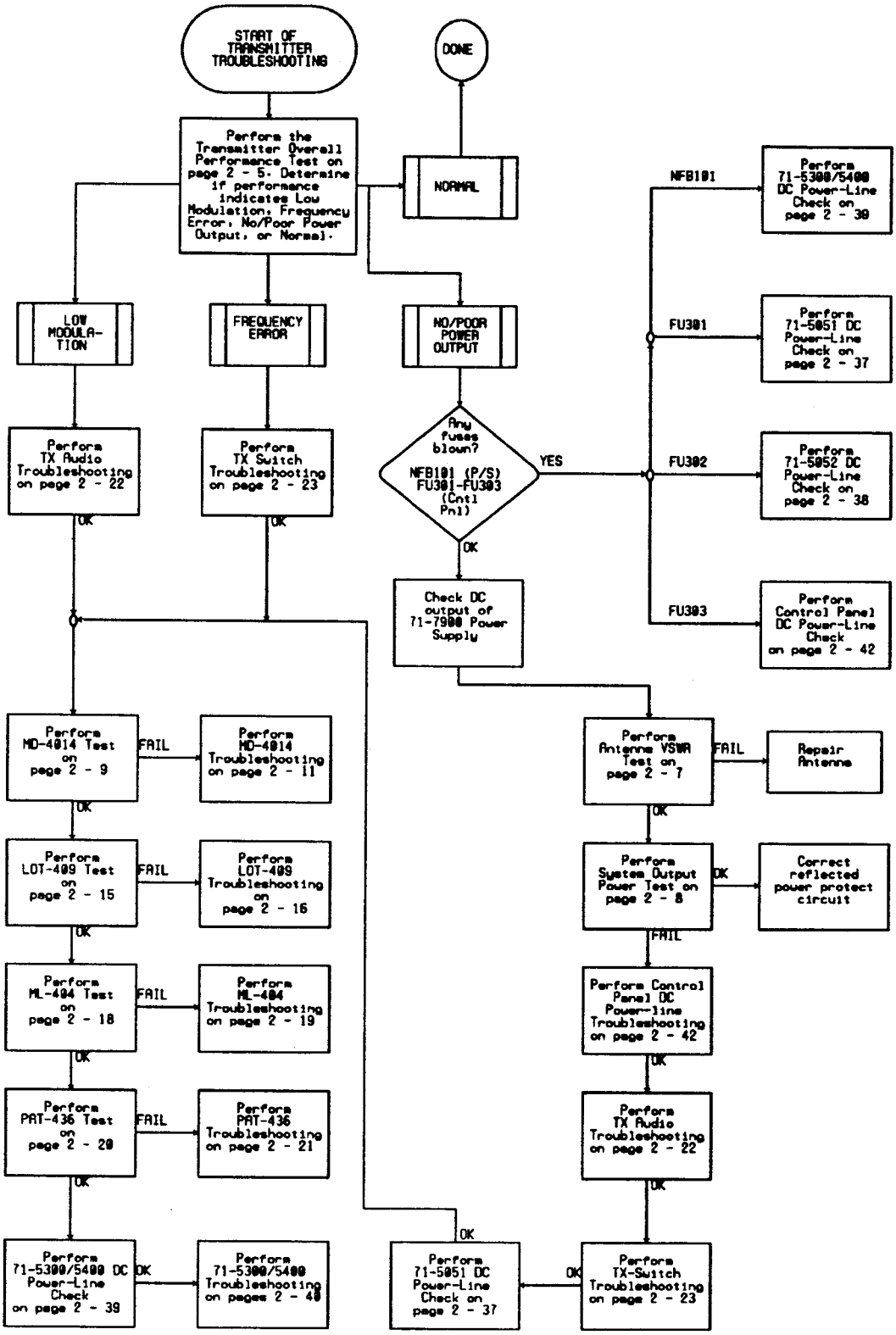

Chart 2 - 1 — Transmitter Troubleshooting

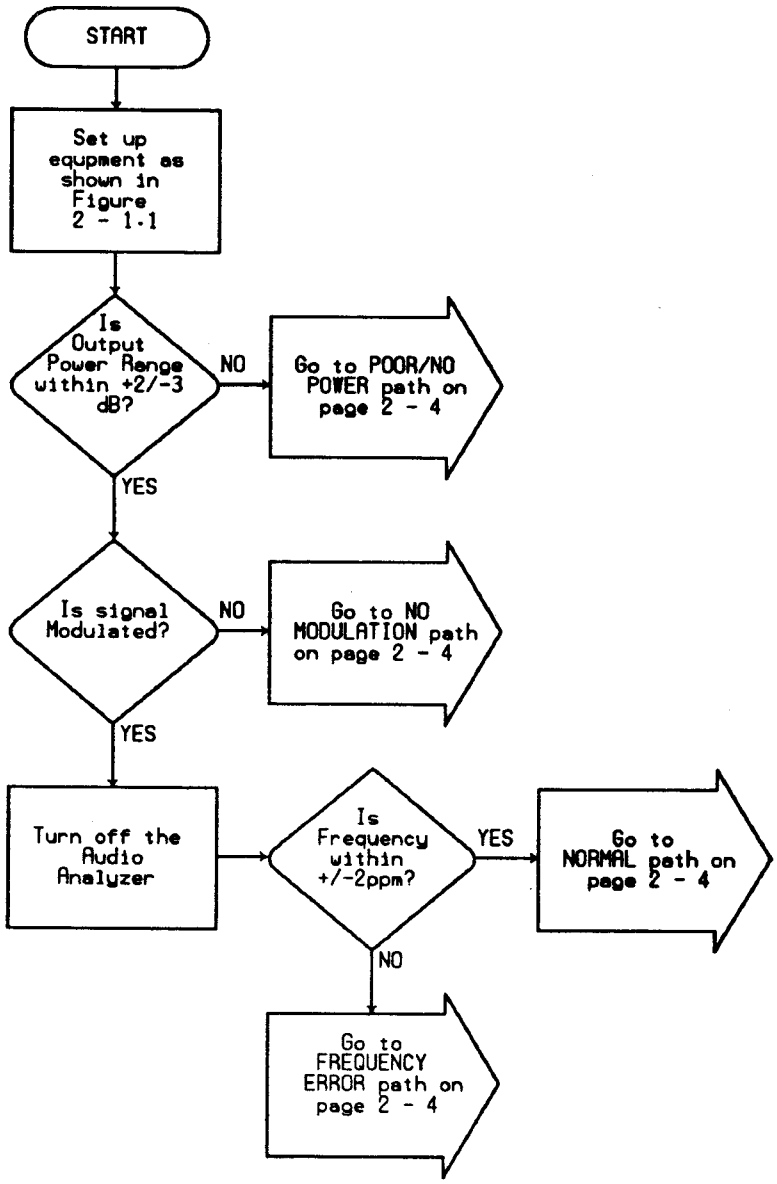

Chart 2 - 1.1 — Transmitter Overall Performance Test

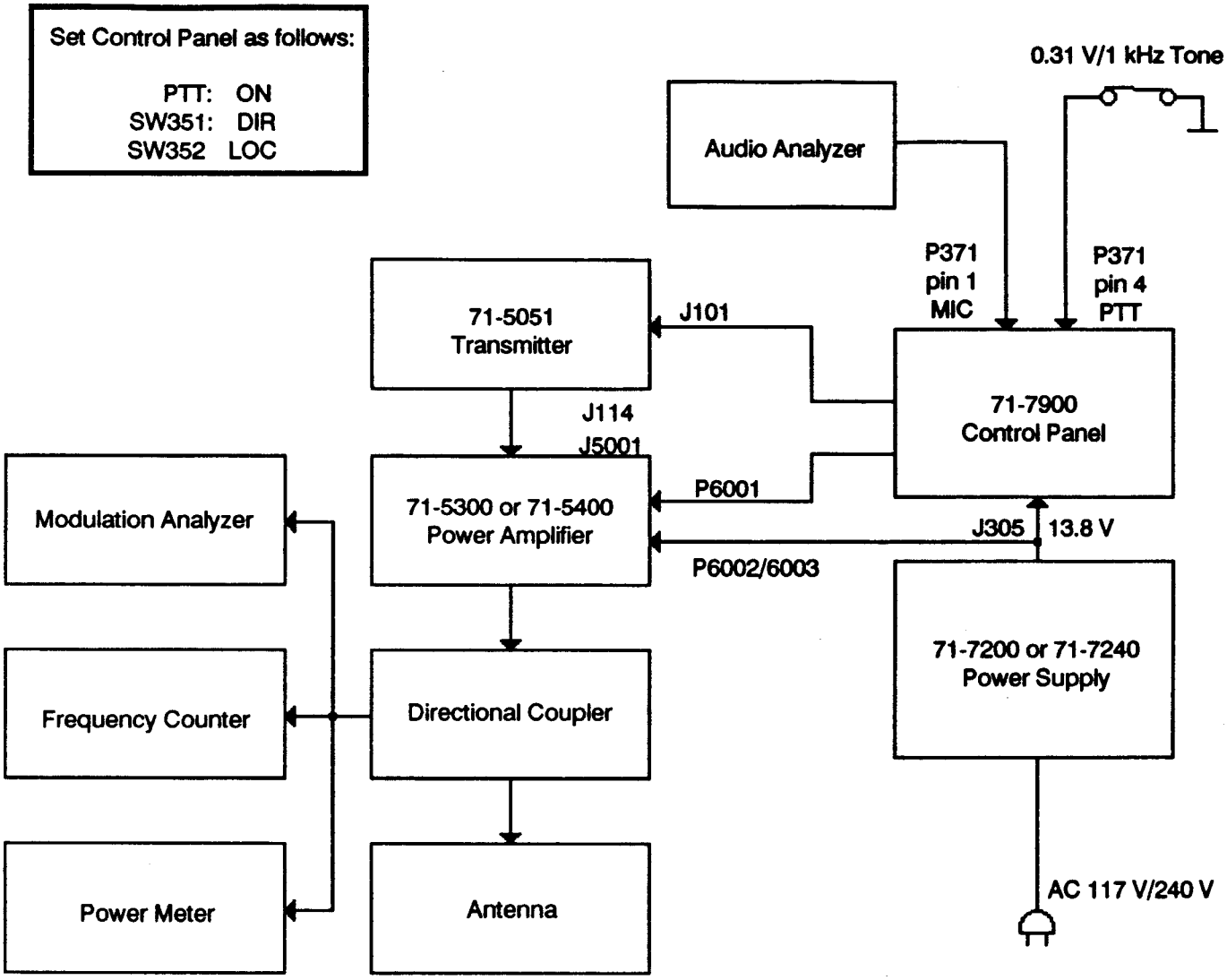

Figure 2 - 1.1 — Set-up for Transmitter Overall Performance Test

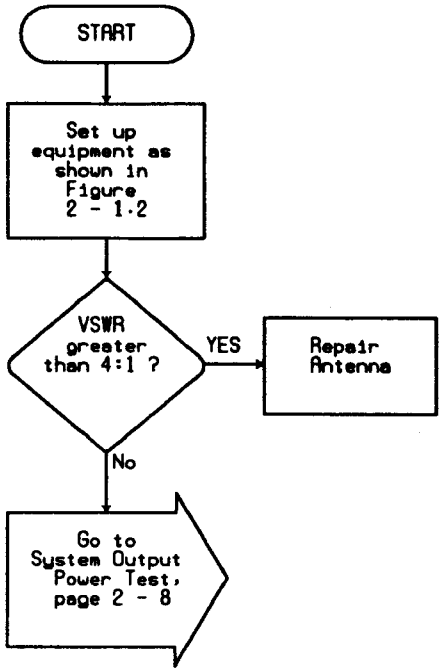

Chart 2 - 1.2 — Antenna VSWR Test

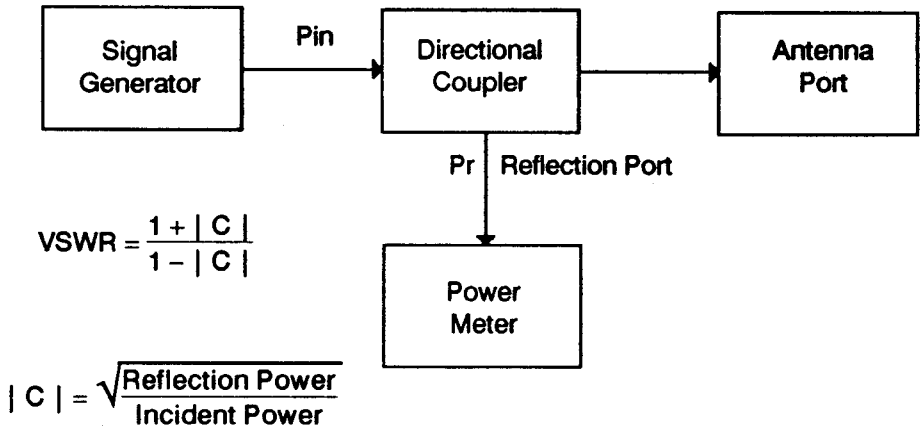

Figure 2 - 1.2 — Set-up for Antenna VSWR Test

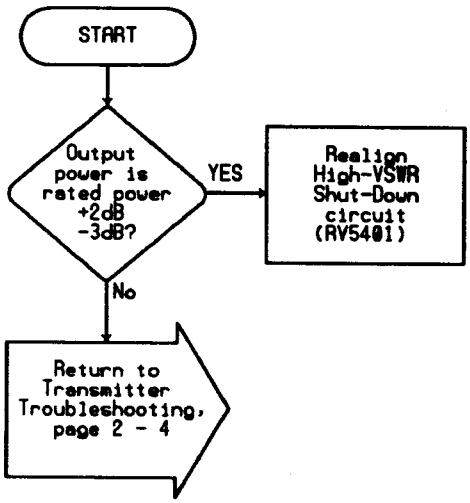

Chart 2 - 1.3 — System Output Power Test

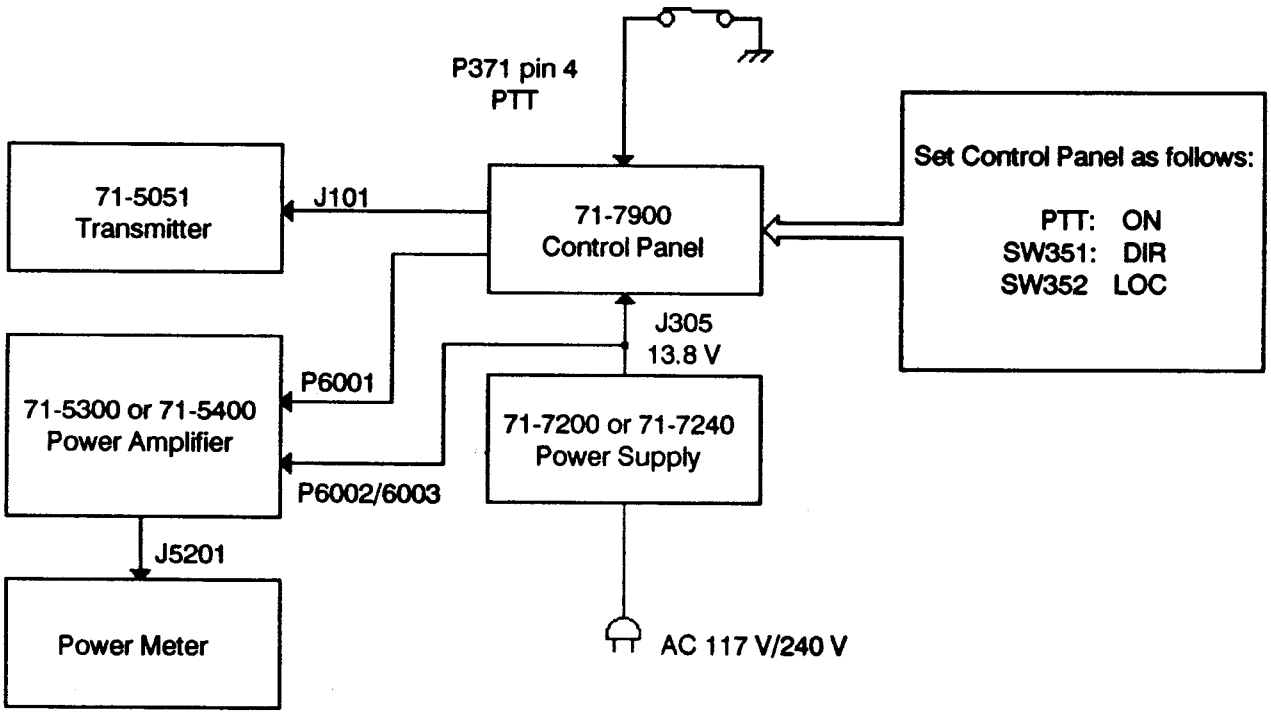

Figure 2 - 1.3 — Set-up for System Output Power Test

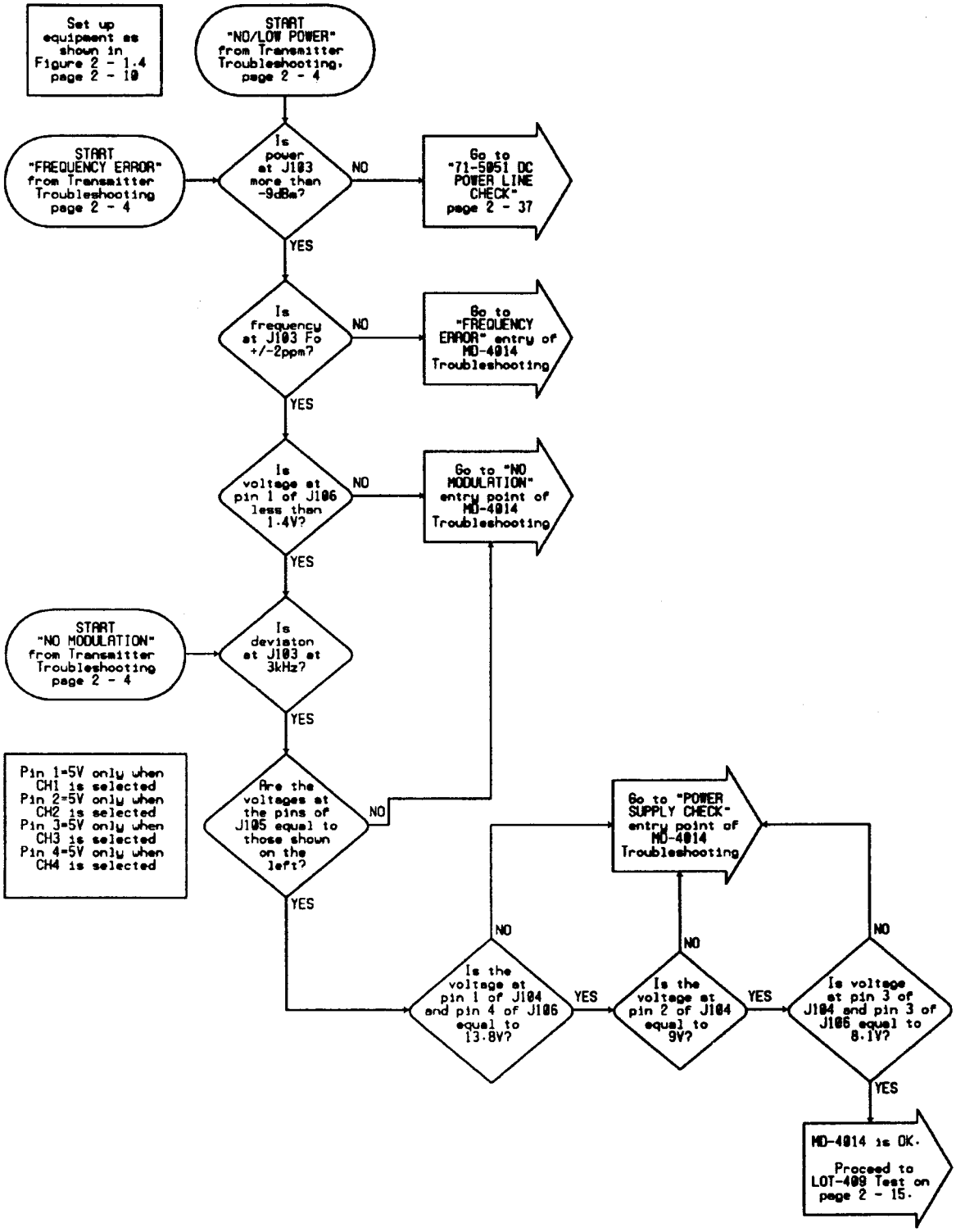

Chart 2 - 1.4 — MD-4014 Test

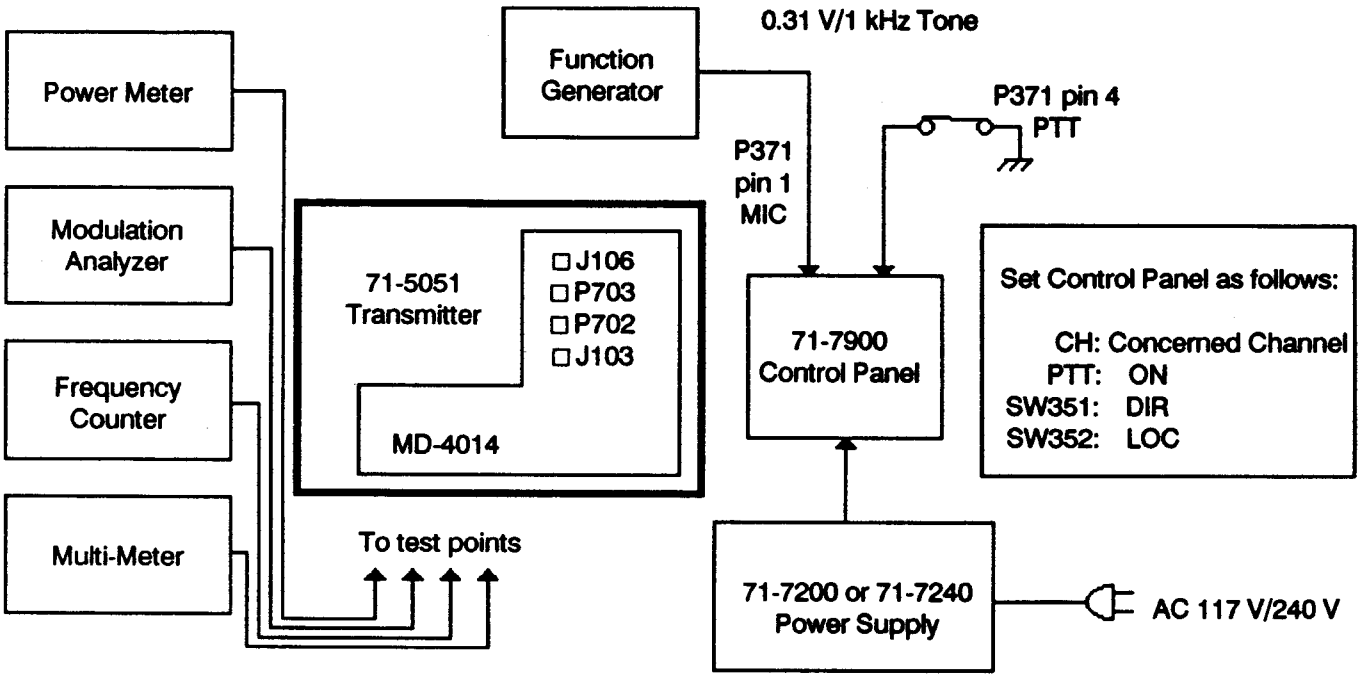

Figure 2 - 1.4 — Set-up for MD-4014 Test

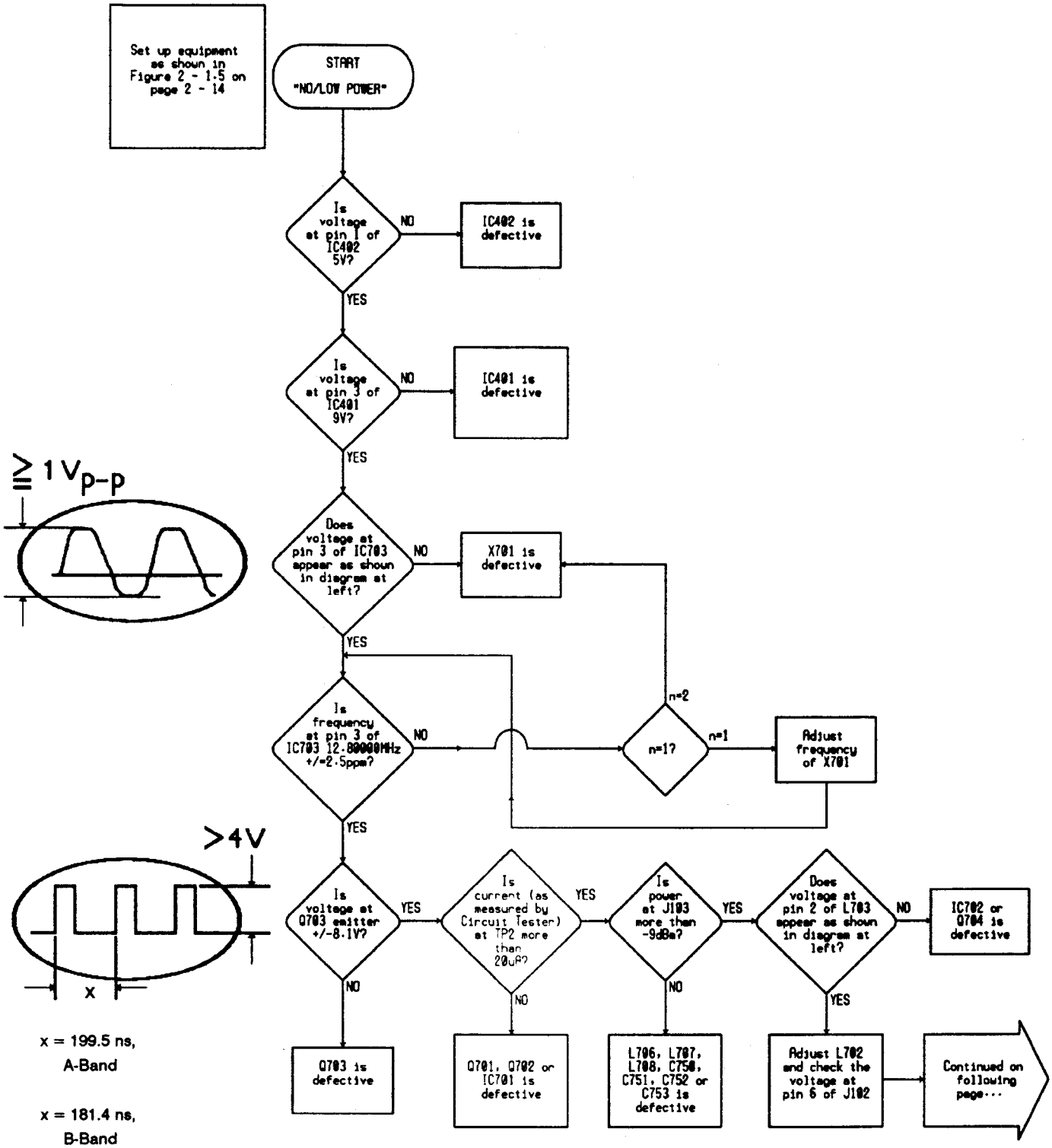

Chart 2 - 1.5a — MD-4014 Troubleshooting

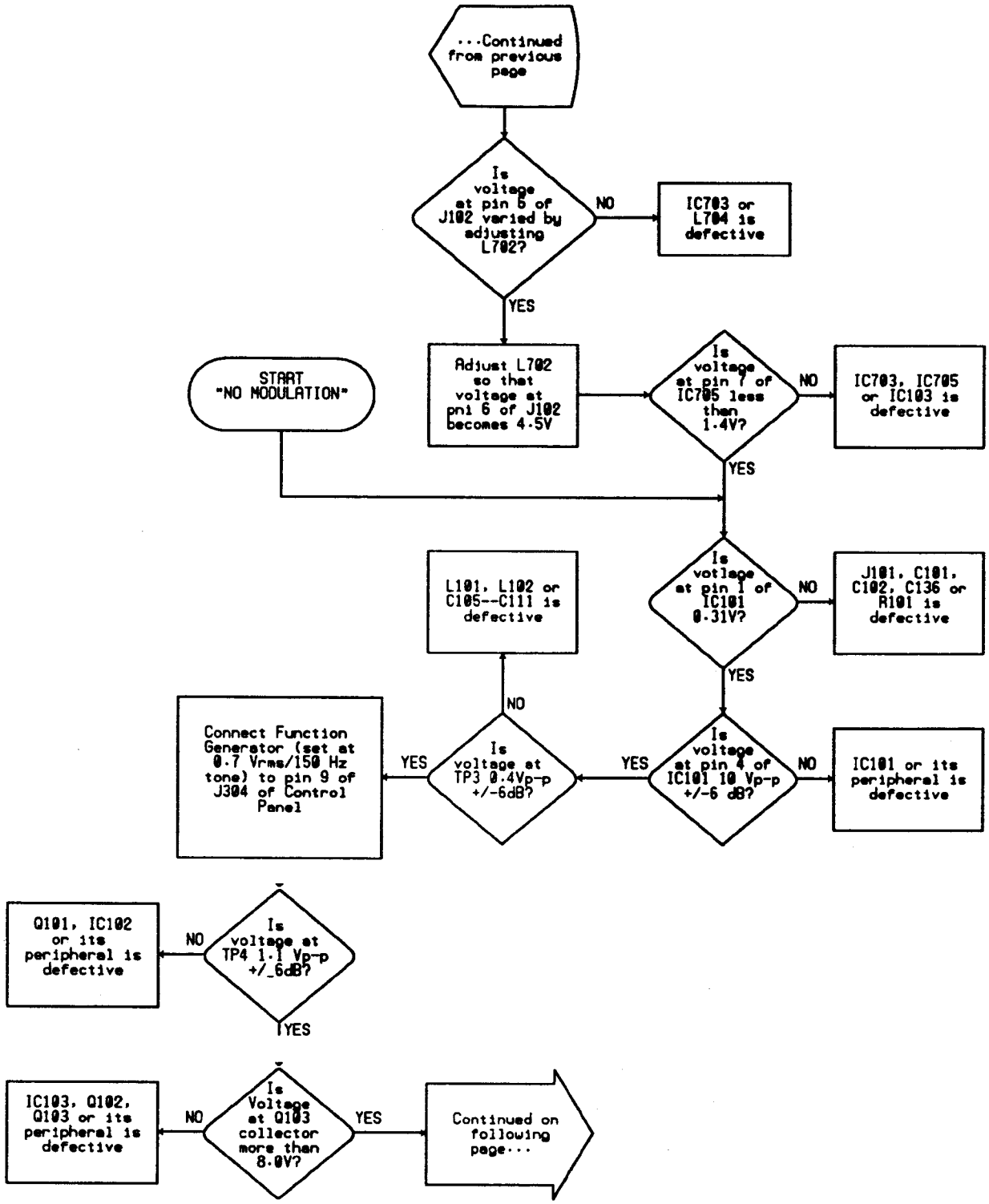

Chart 2 - 1.5b — MD-4014 Troubleshooting (Continued)

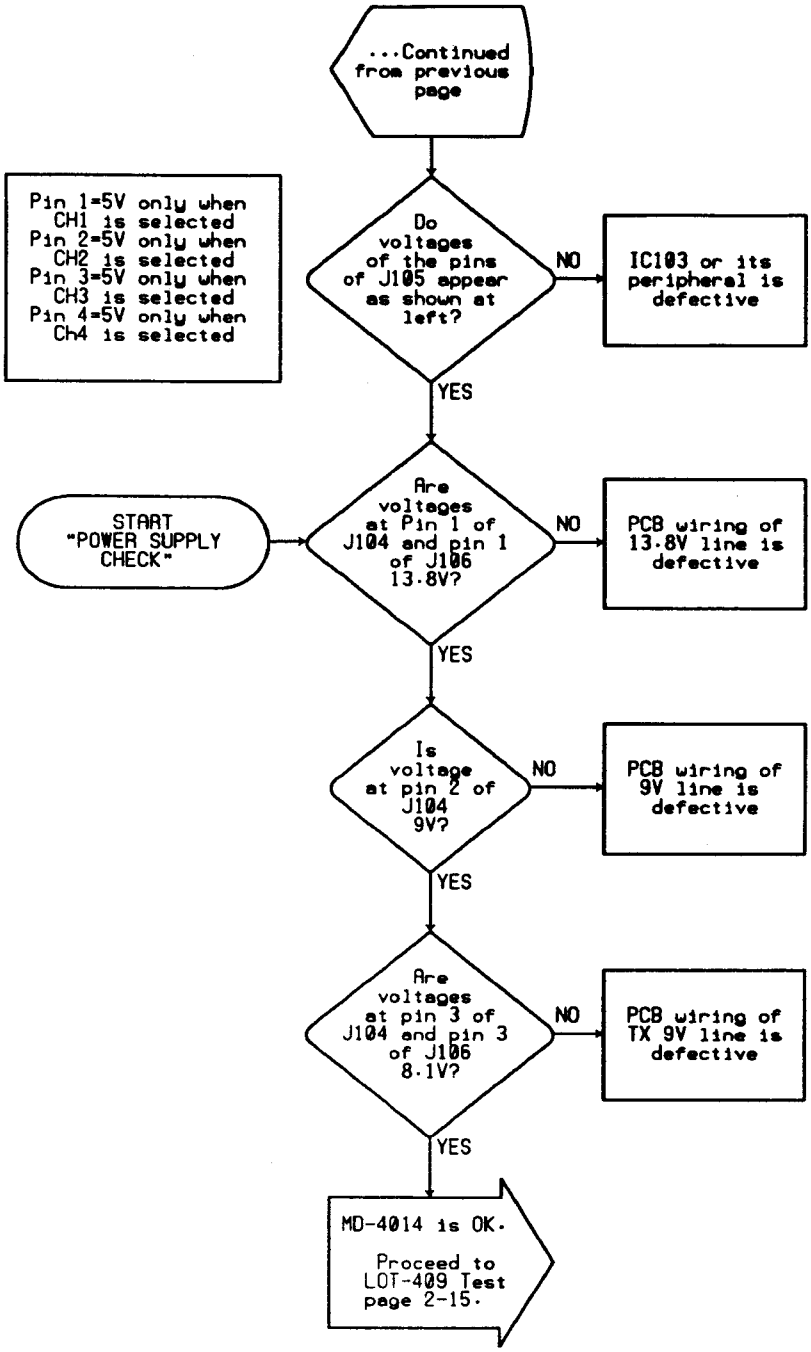

Chart 2 - 1.5c — MD-4014 Troubleshooting (Continued)

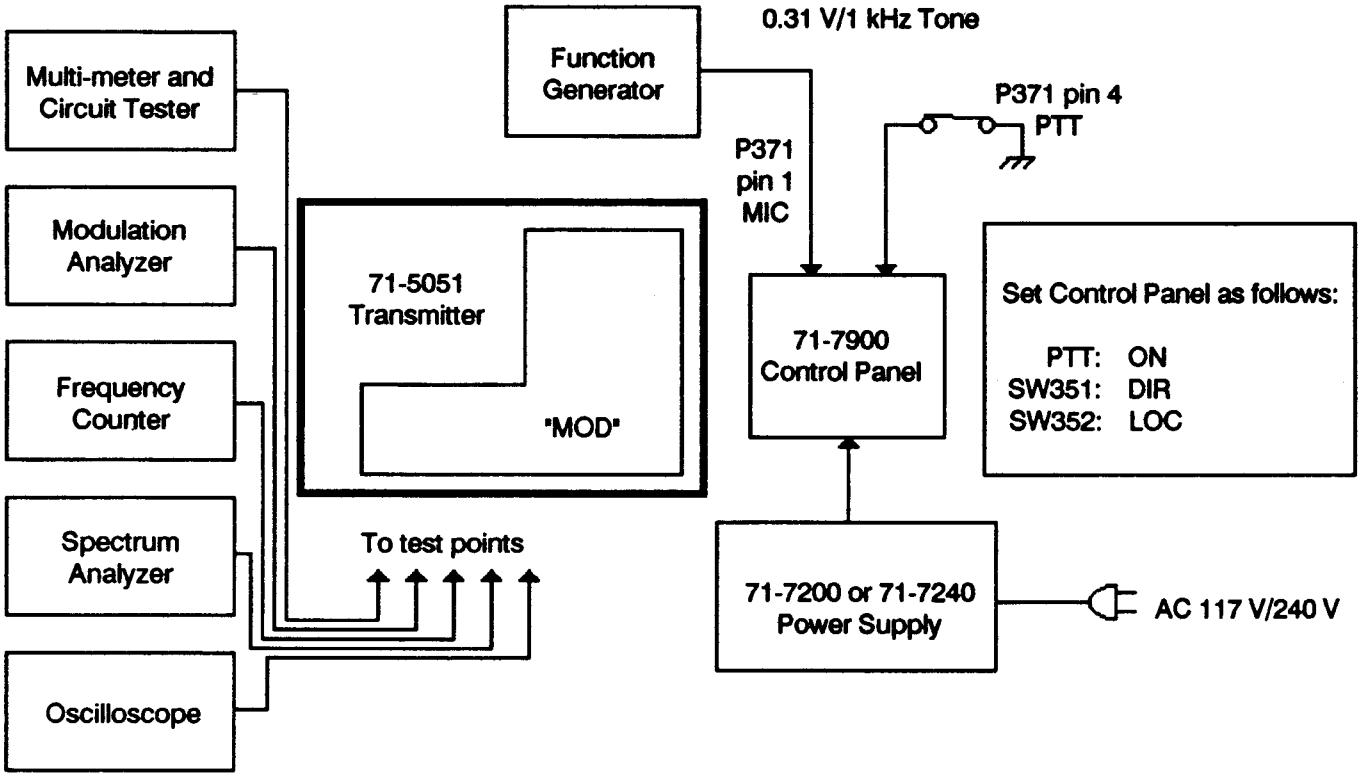

Figure 2 - 1.5 — Set-up for MD-4014 Troubleshooting

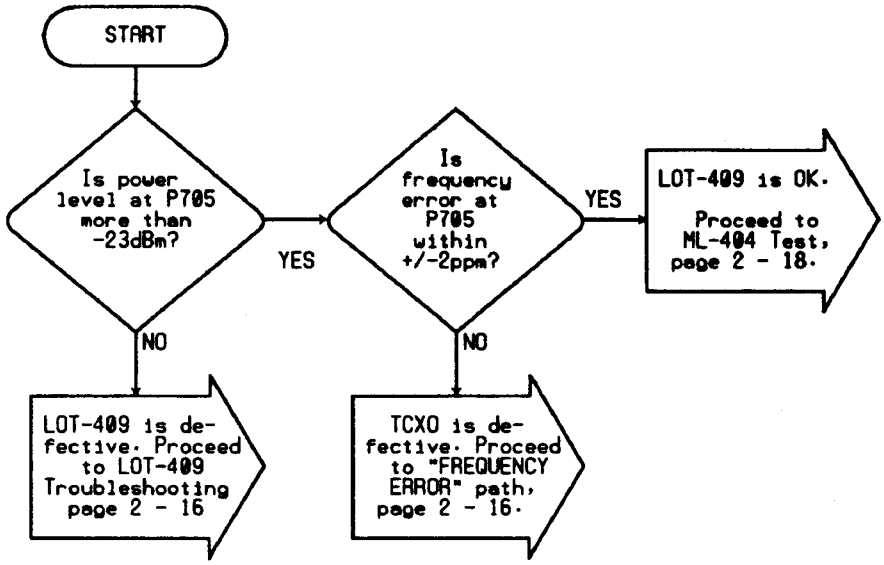

Chart 2 - 1.6 — LOT-409 Test

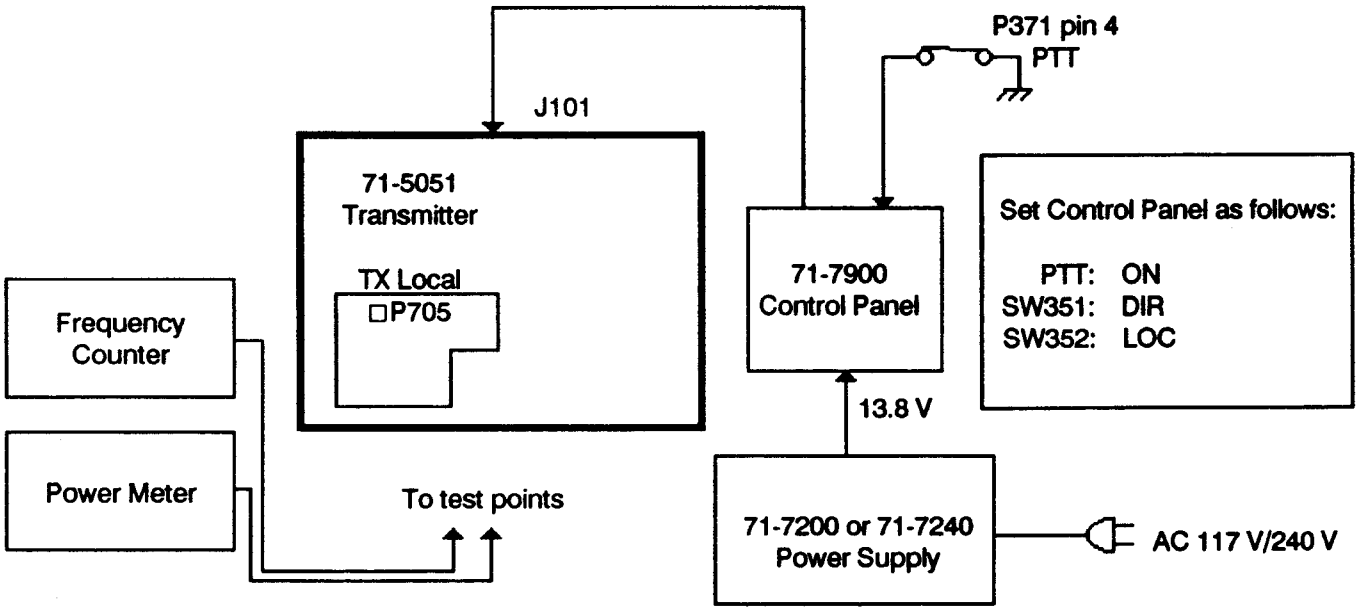

Figure 2 - 1.6 — Setup for LOT-409 Test

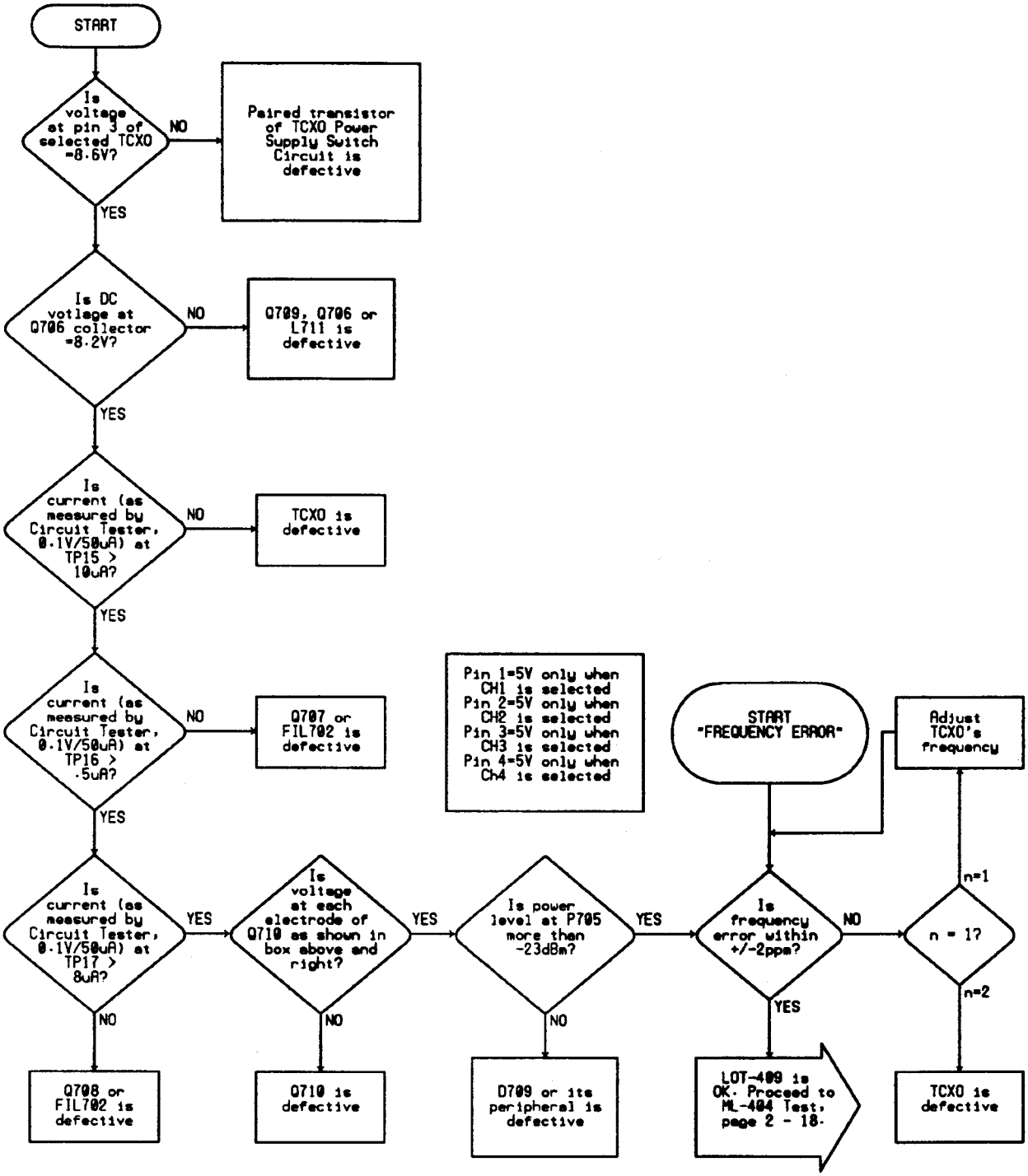

Chart 2 - 1.7 — LOT-409 Troubleshooting

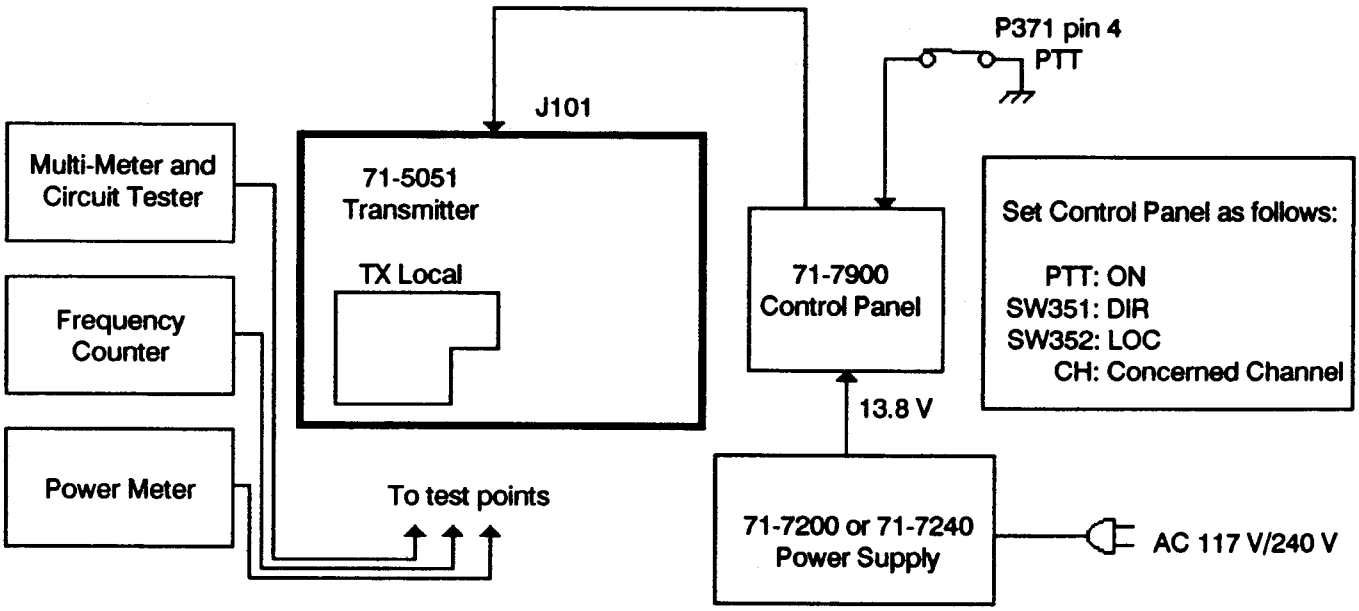

Figure 2 - 1.7 — Set-up for LOT-409 Troubleshooting

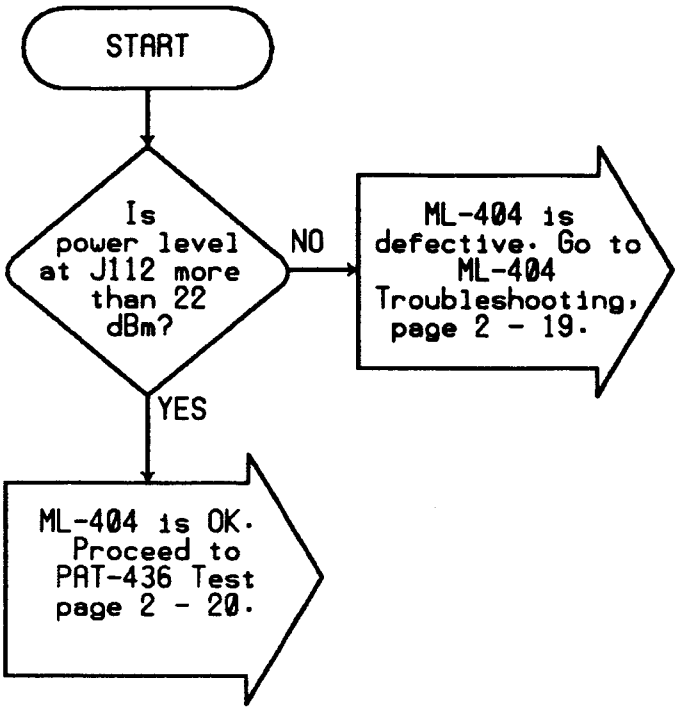

Chart 2 - 1.8 — ML-404 Test

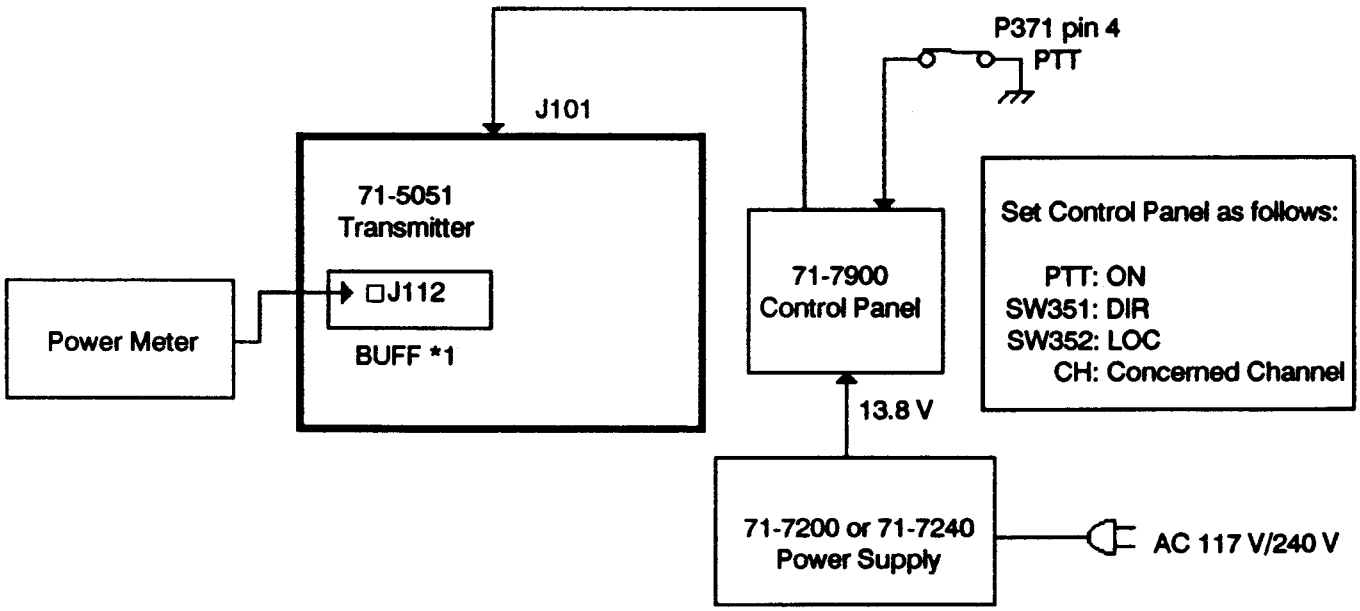

Figure 2 - 1.8 — Set-up for ML-404 Test

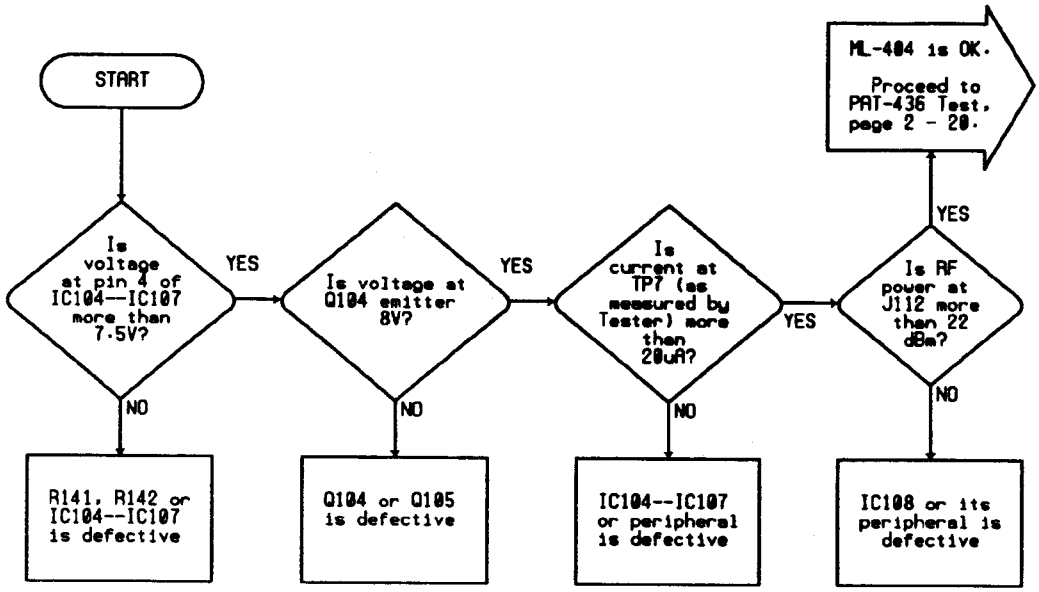

Chart 2 - 1.9 — ML-404 Troubleshooting

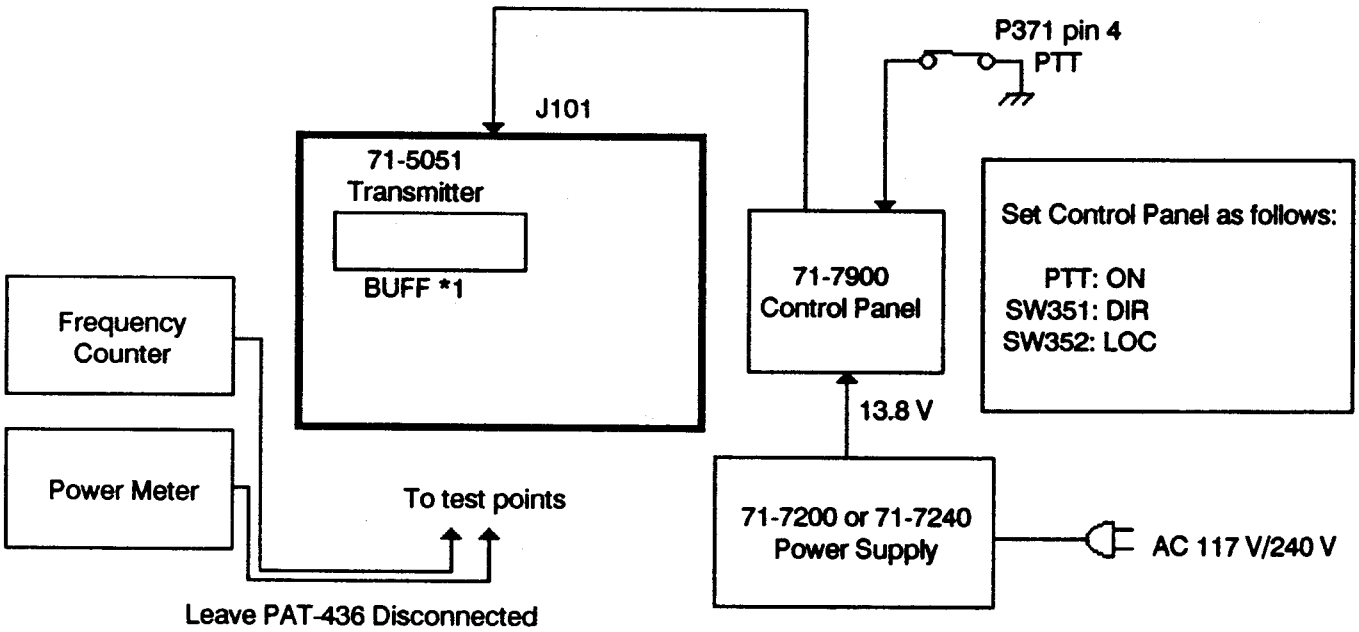

Figure 2 - 1.9 — Setup for ML-404 Troubleshooting

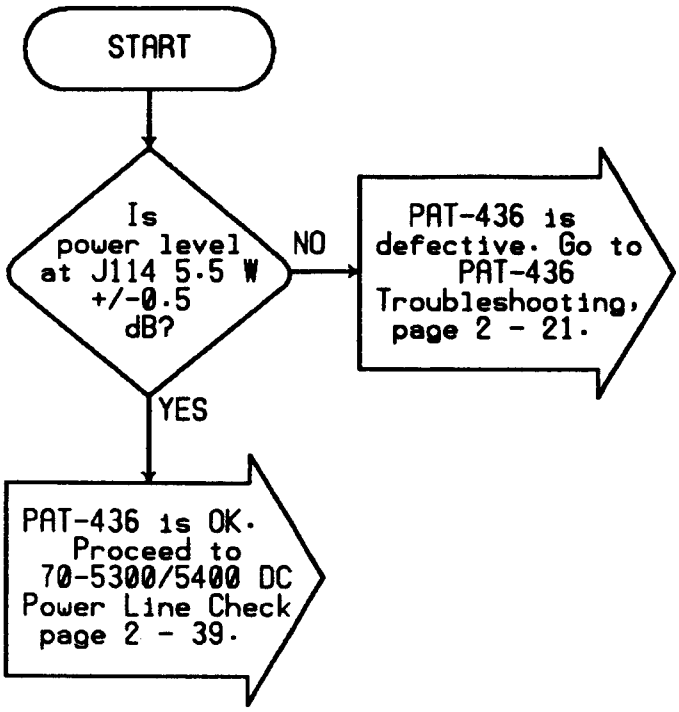

Chart 2 - 1.10 — PAT-436 Test

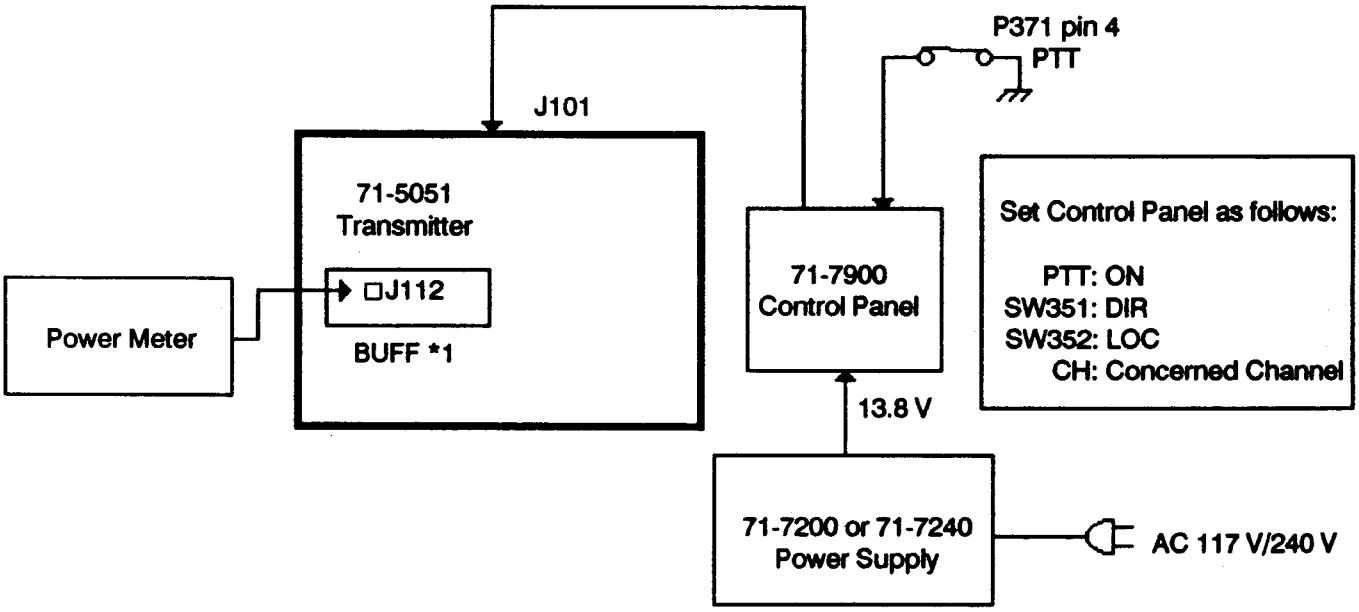

Figure 2 - 1.10 — Set-up for PAT-436 Test

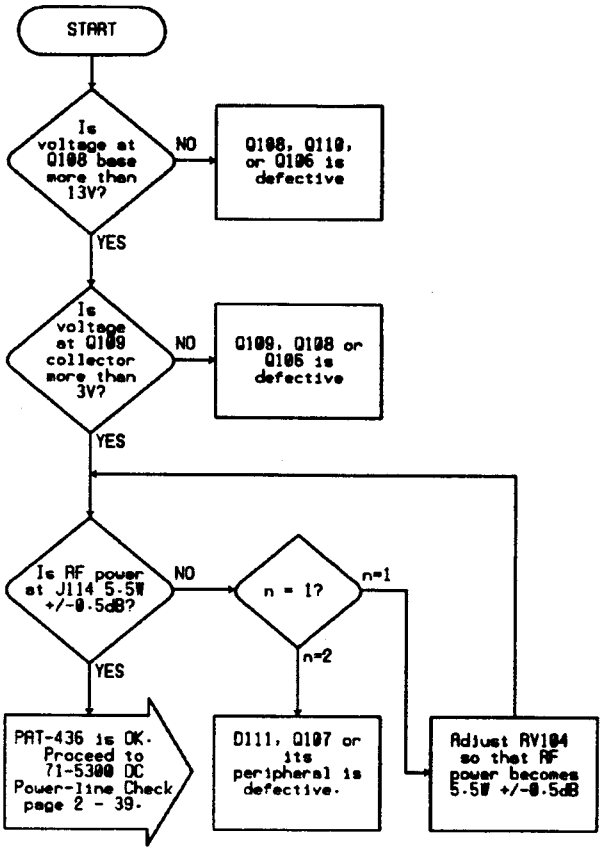

Chart 2 - 1.11 — PAT-436 Troubleshooting

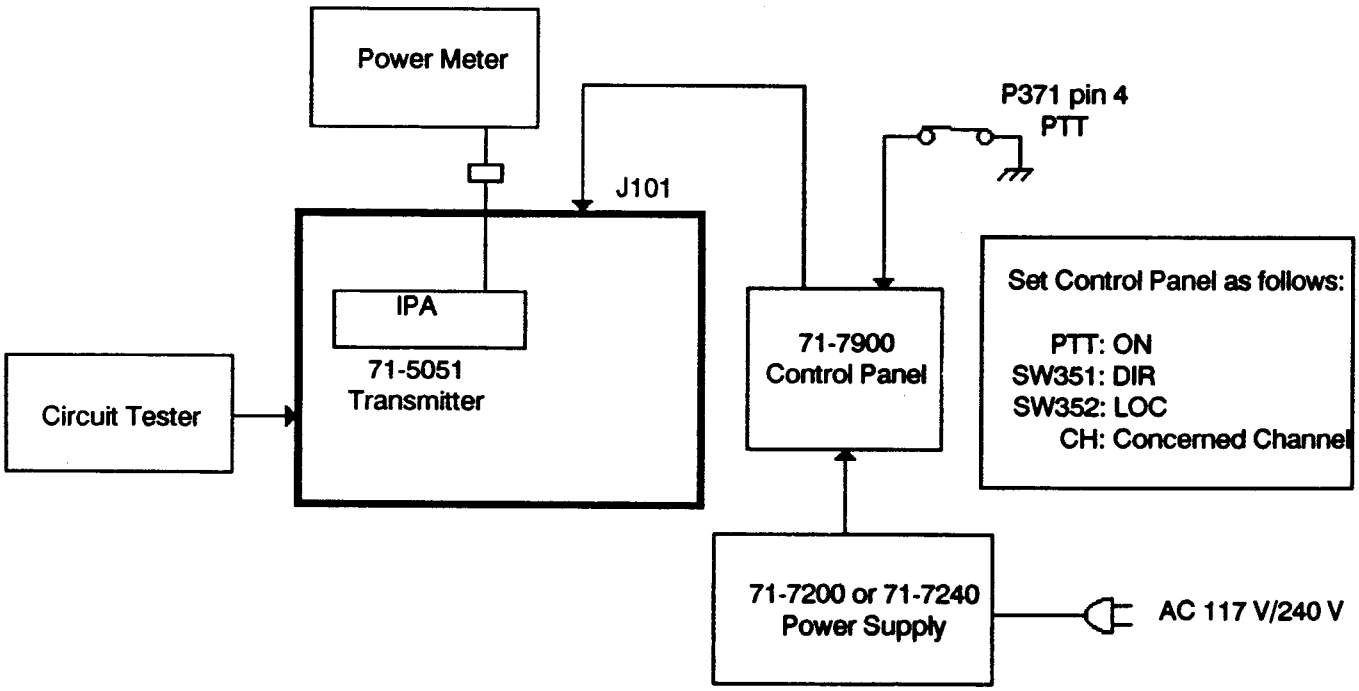

Figure 2 - 1.11 — Setup for PAT-436 Troubleshooting

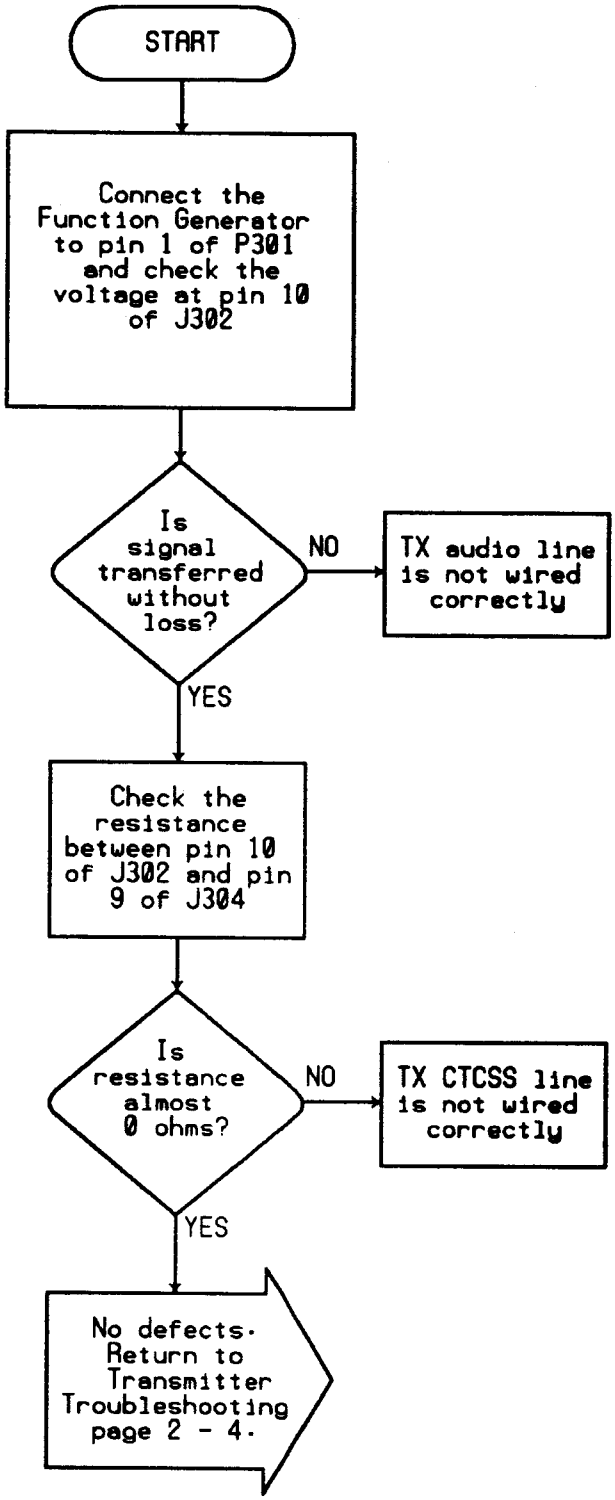

Chart 2 - 1.12 — TX Audio Troubleshooting

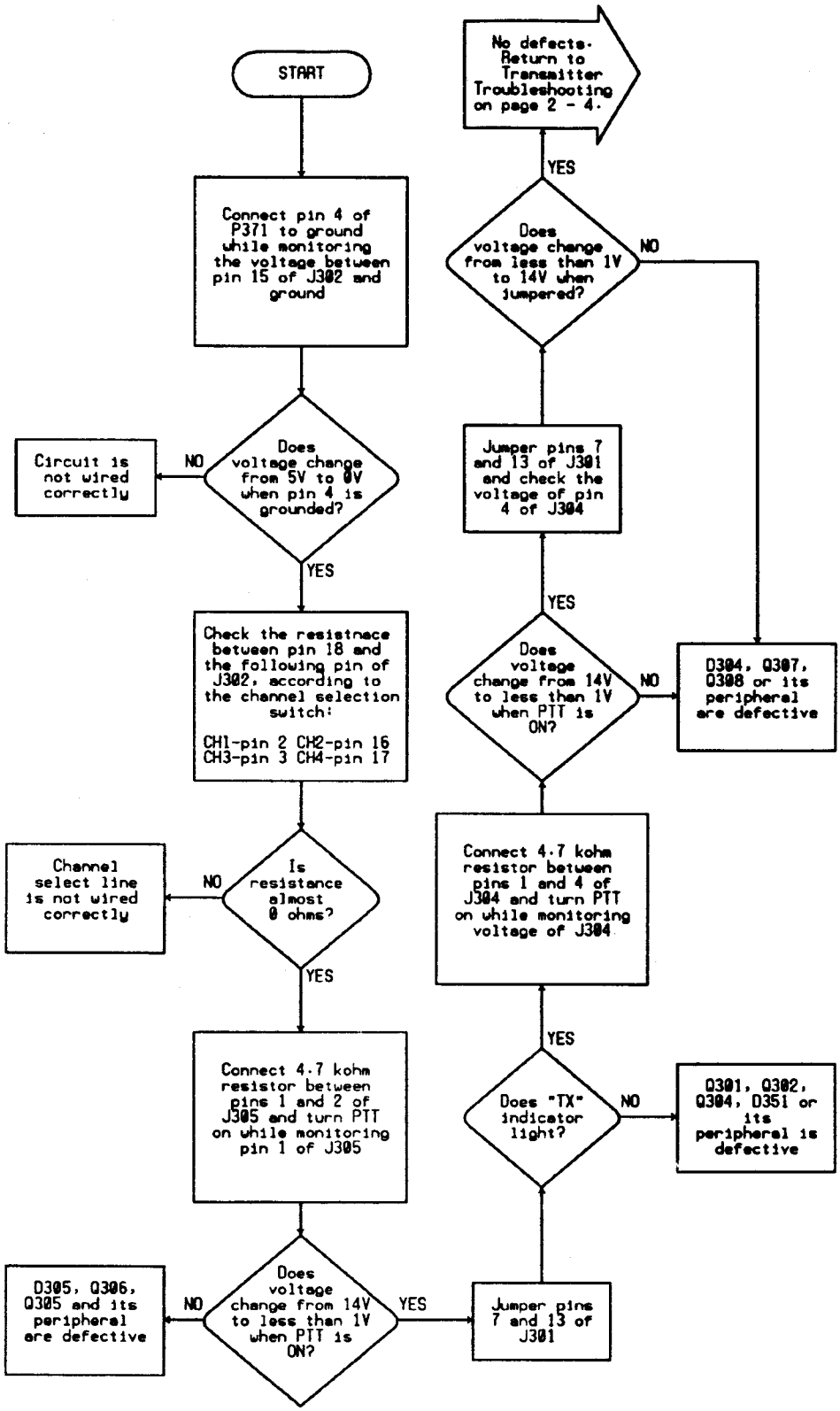

Chart 2 - 1.13 — TX Switch Troubleshooting

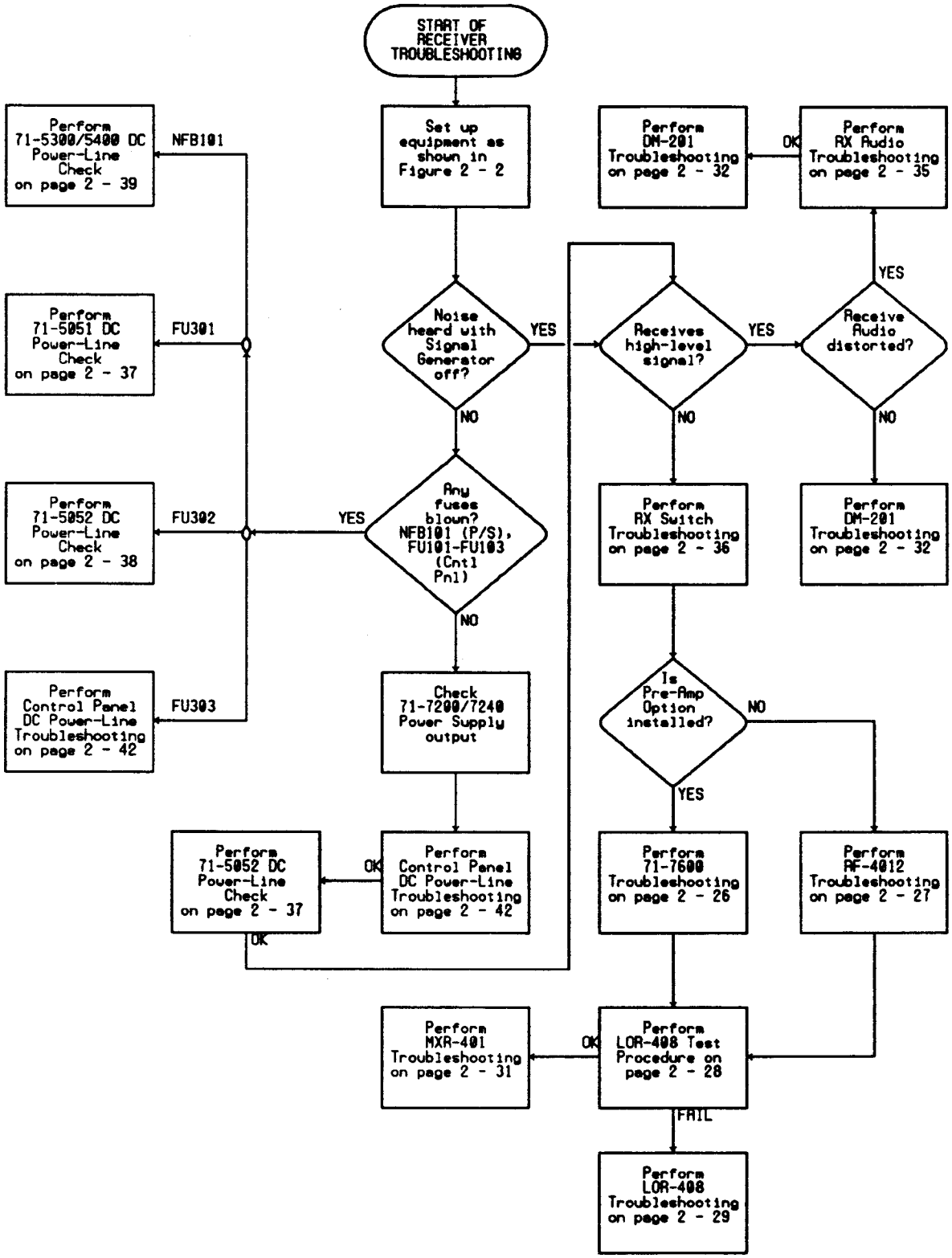

Chart 2 - 2 — Receiver Troubleshooting

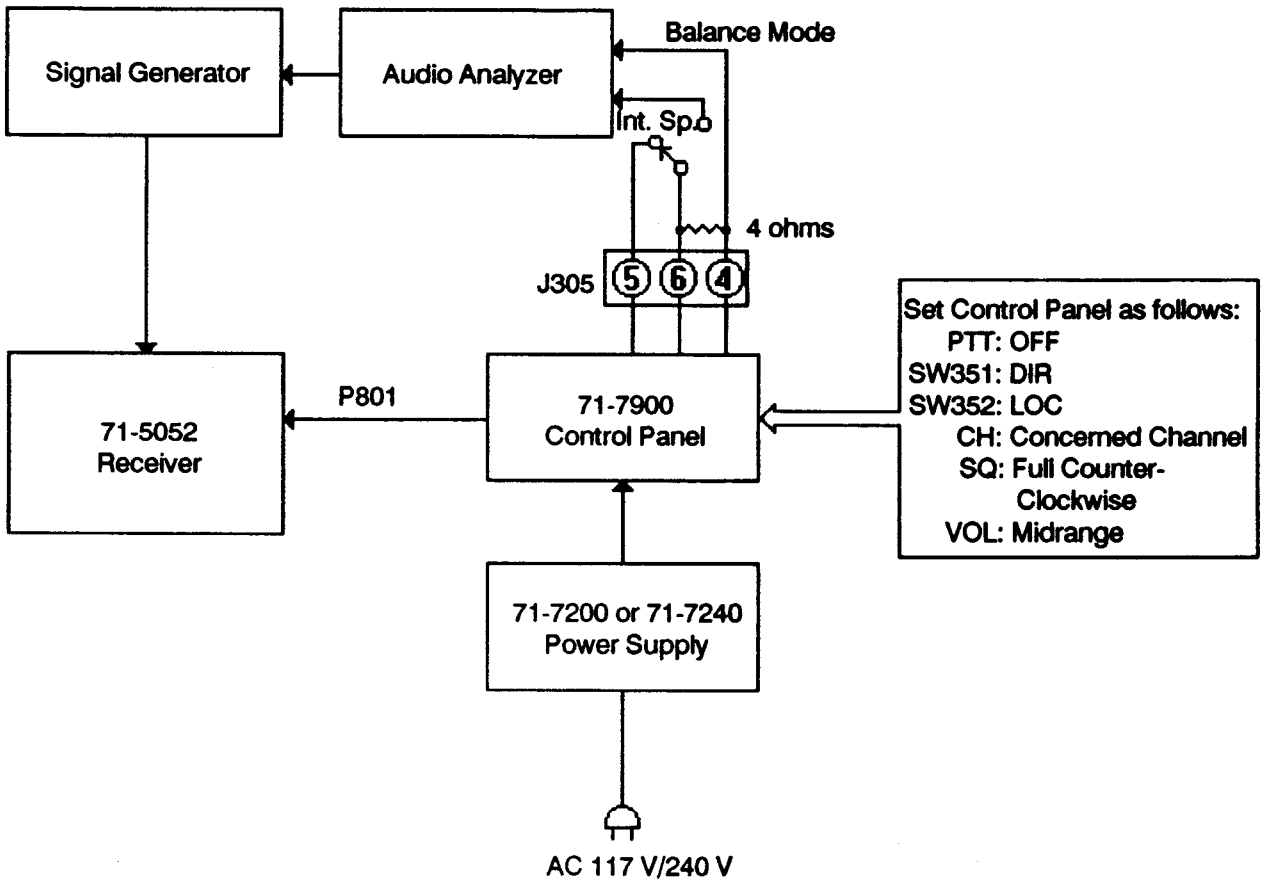

Figure 2 - 2.1 — Set-up for Receiver Overall Performance

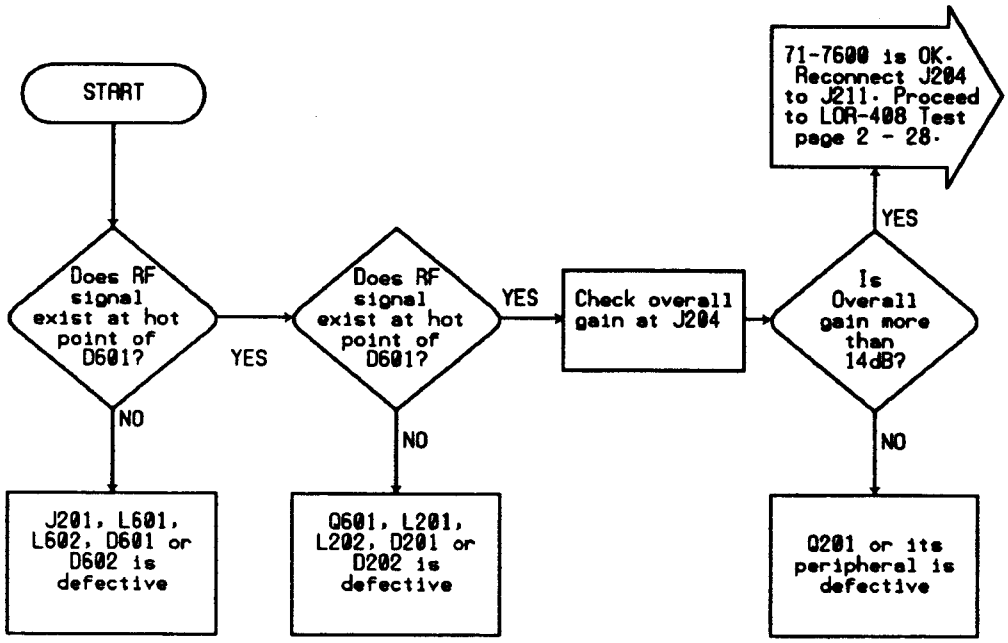

Chart 2 - 2. 2 — 71-7600 Troubleshooting

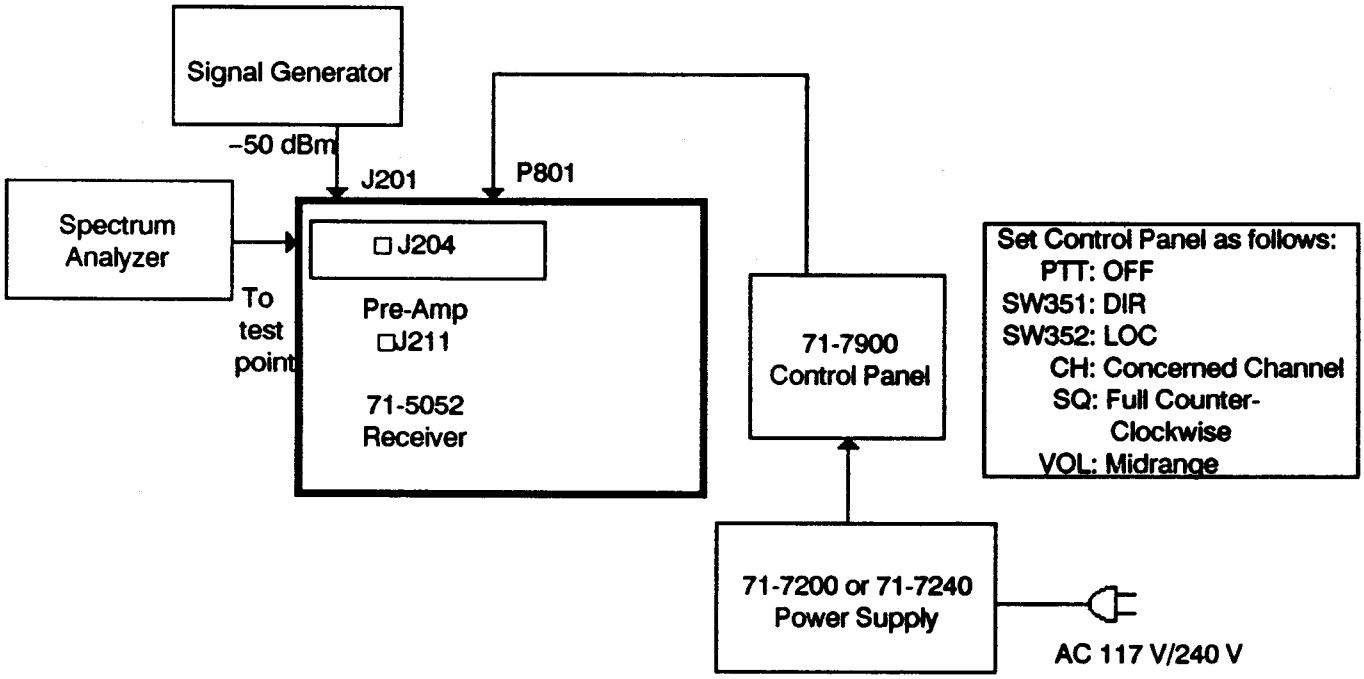

Figure 2 - 2. 2 — Set-up for 71-7600 Troubleshooting

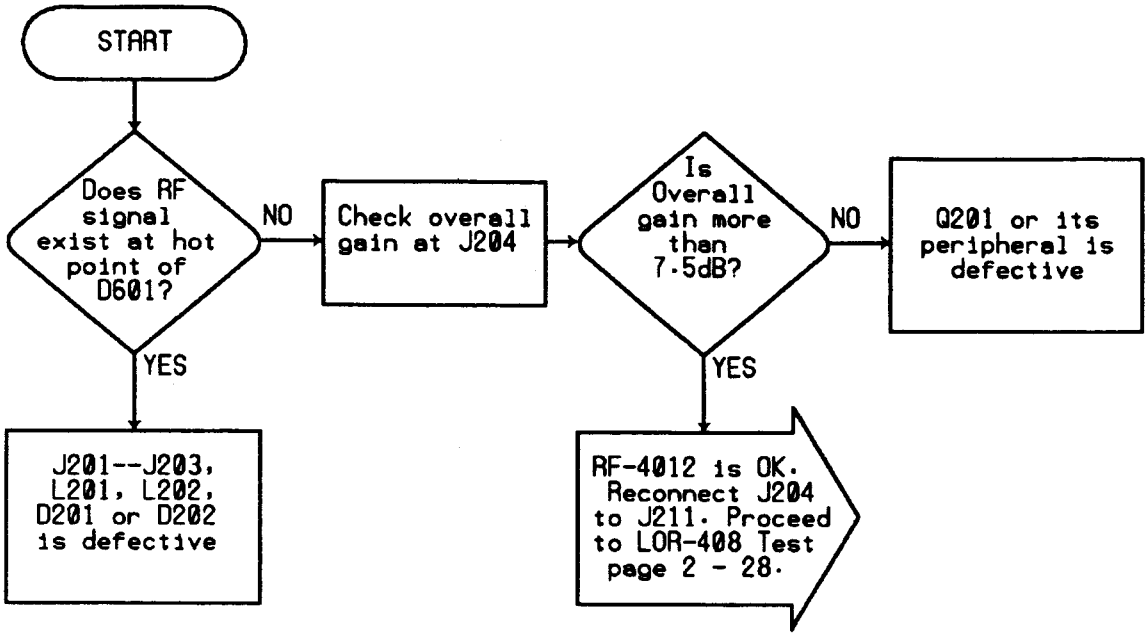

Chart 2 - 2.3 — RF-4012 Troubleshooting

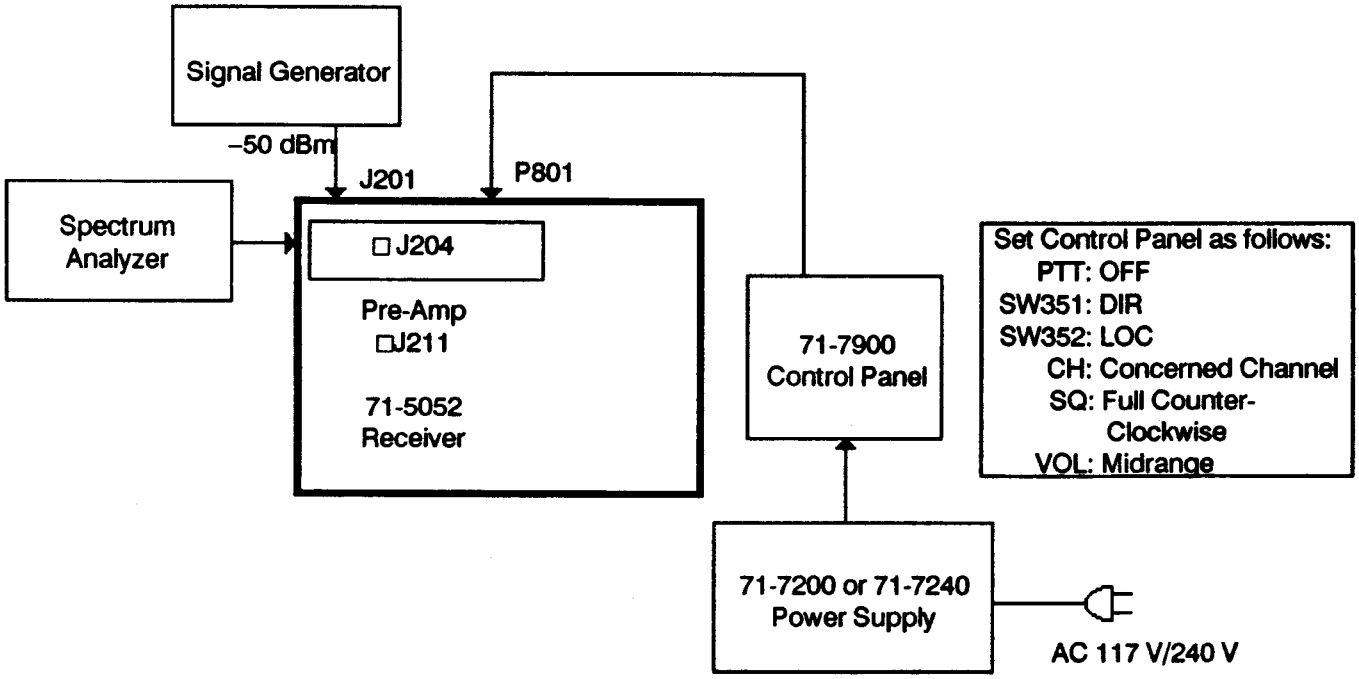

Figure 2 - 2. 3 — Set-up for RF-4012 Troubleshooting

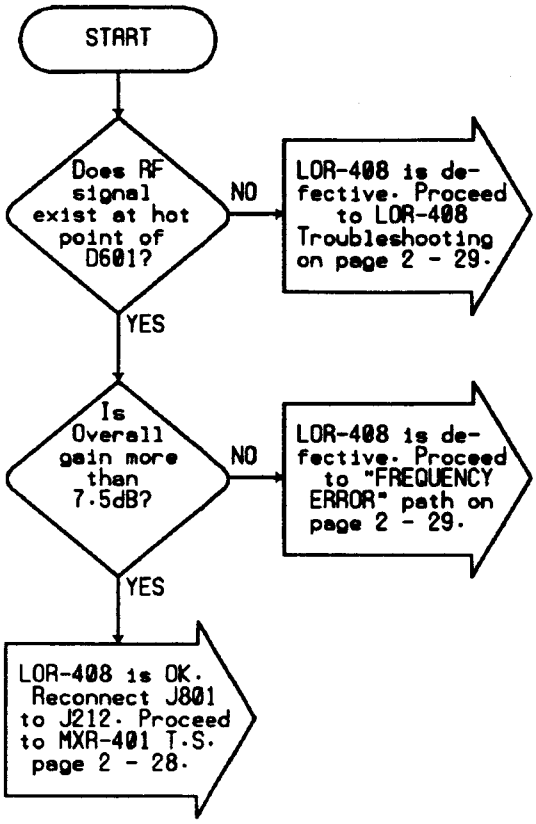

Chart 2 - 2.4 — LOR-408 Test

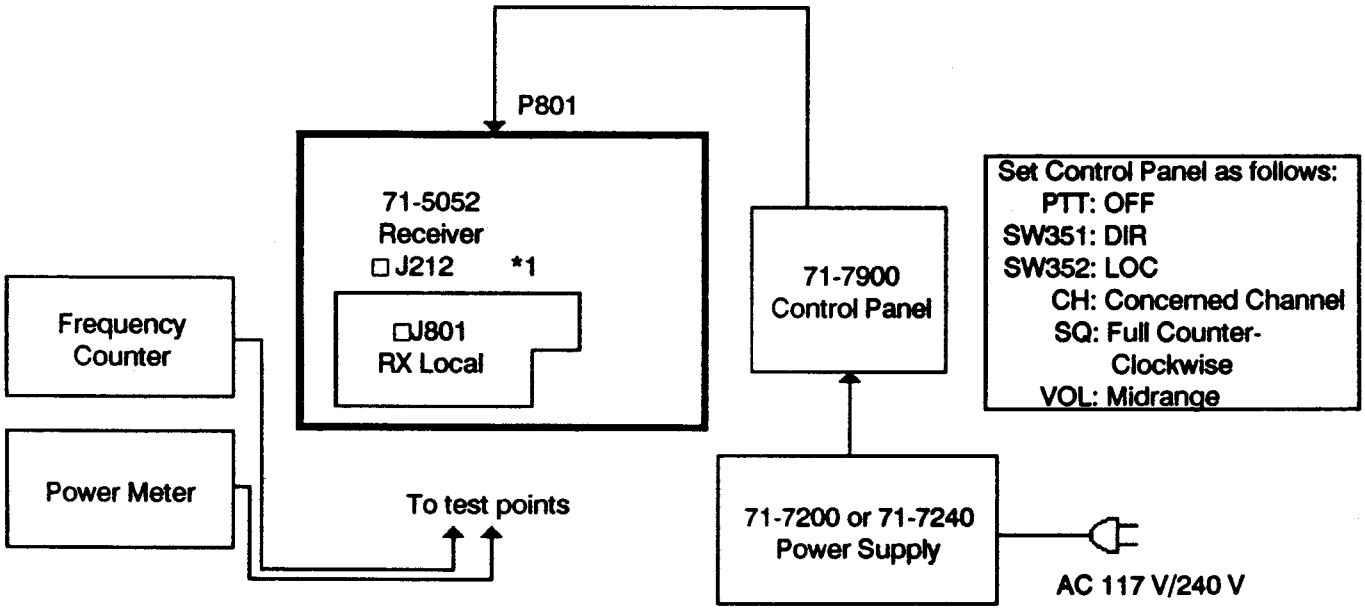

Figure 2 - 2.4 — Set-up for LOR-408 Test

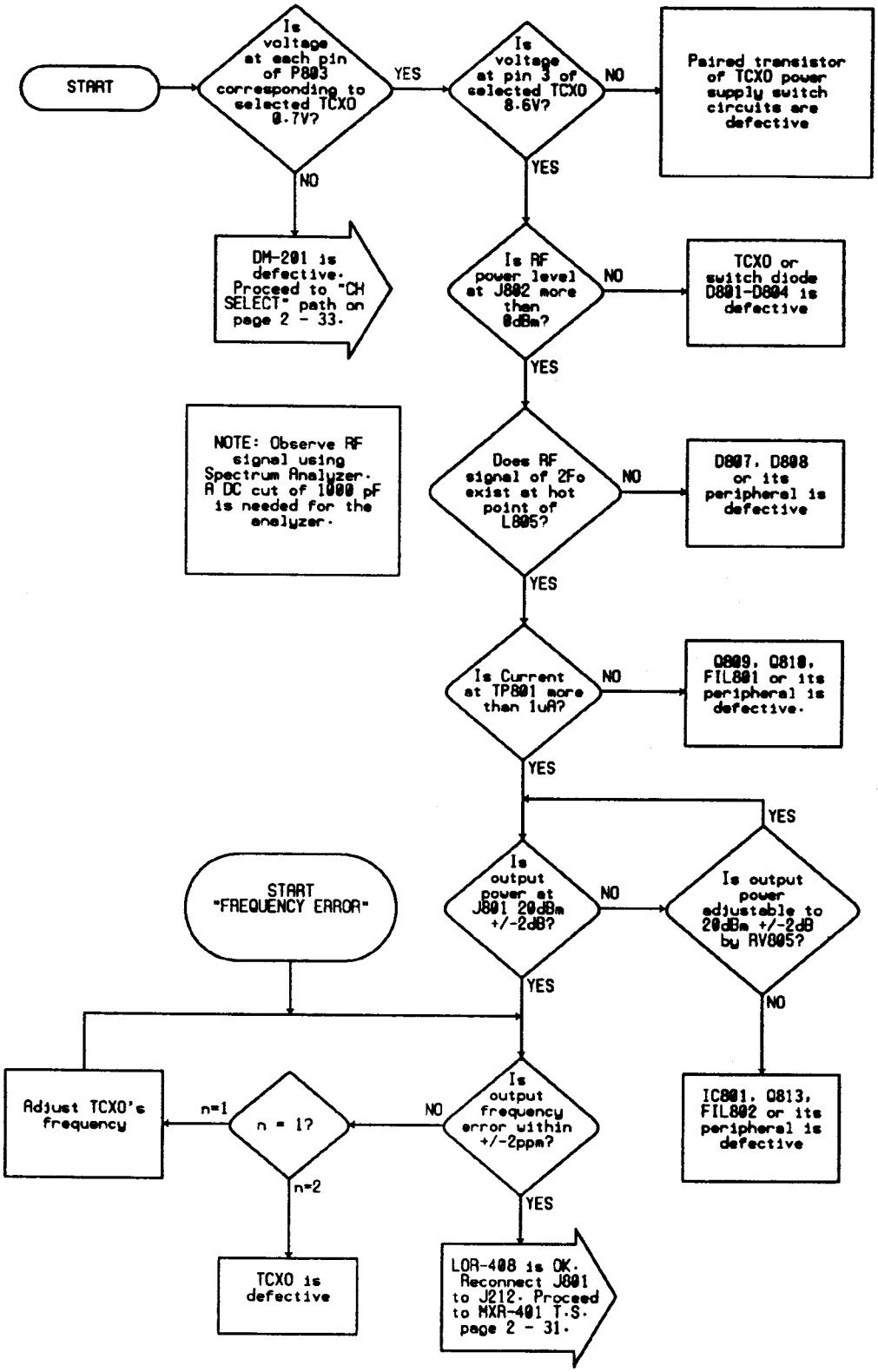

Chart 2 - 2.5 — LOR-408 Troubleshooting

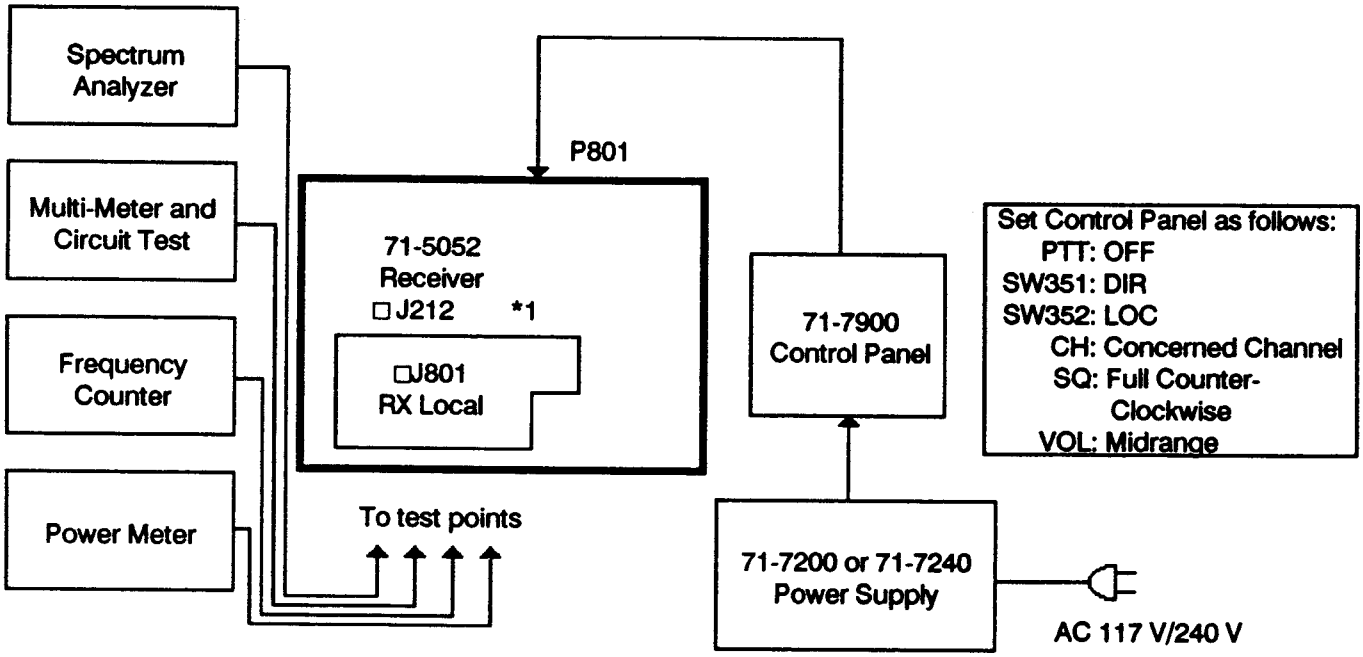

Figure 2 - 2.5 — Set-up for LOR-408 Troubleshooting

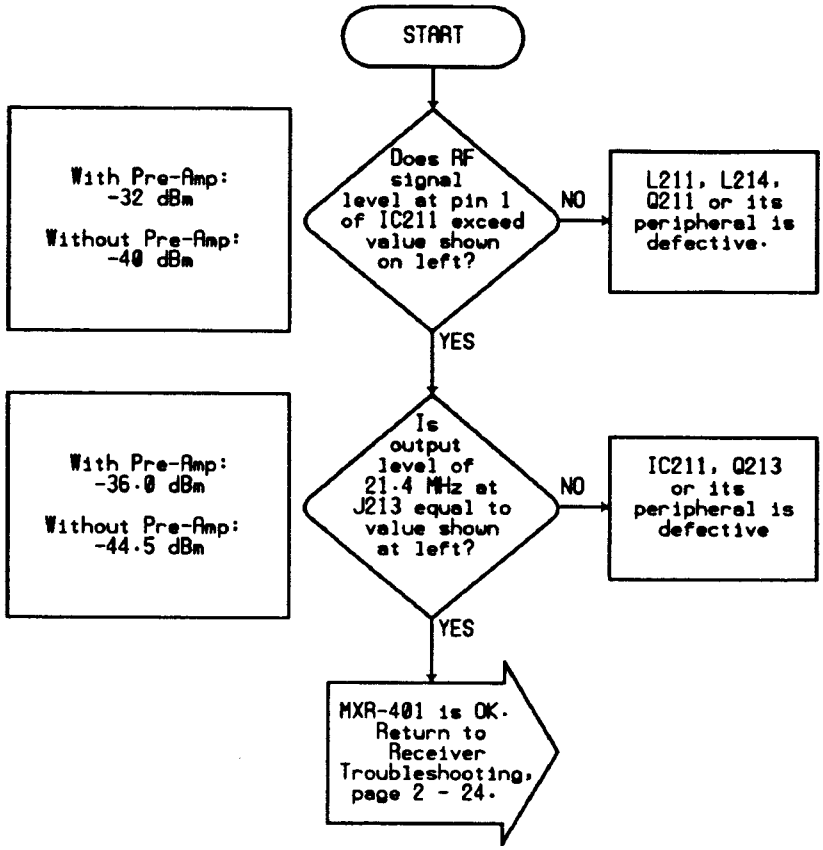

Chart 2 - 2.6 — MXR-401 Troubleshooting

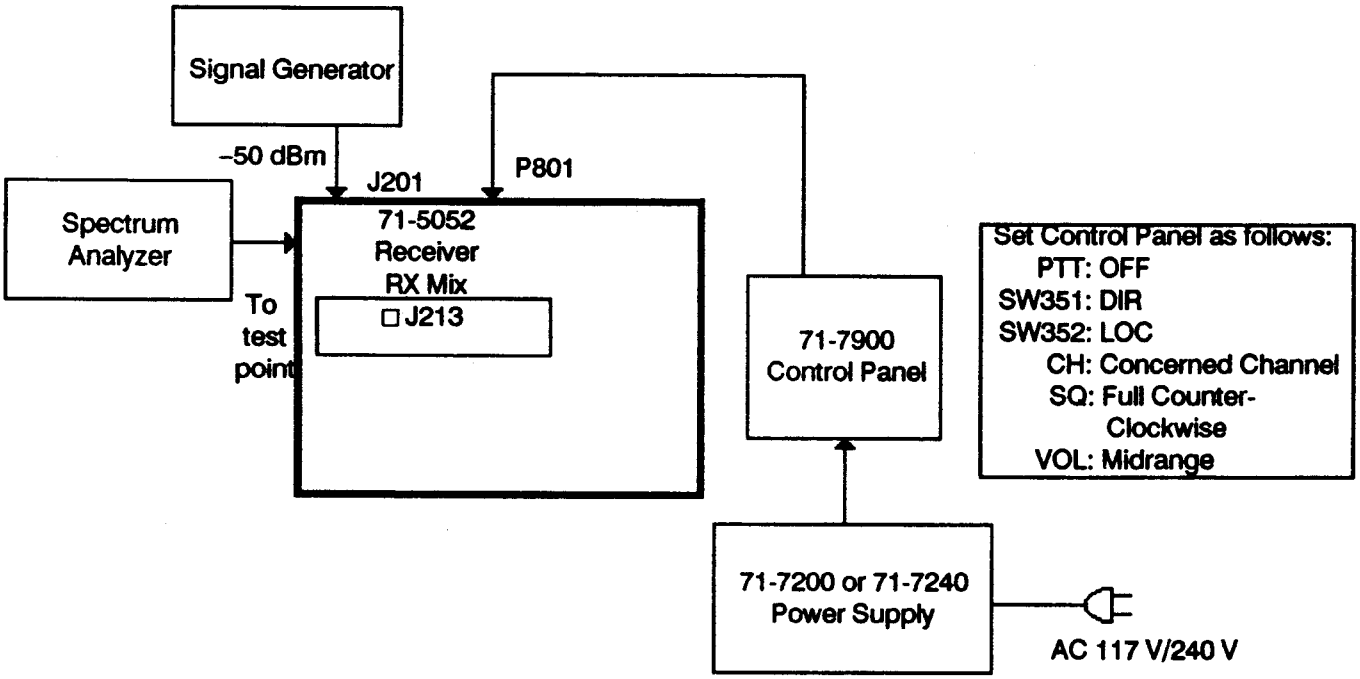

Figure 2 - 2.6 — Set-up for MXR-401 Troubleshooting

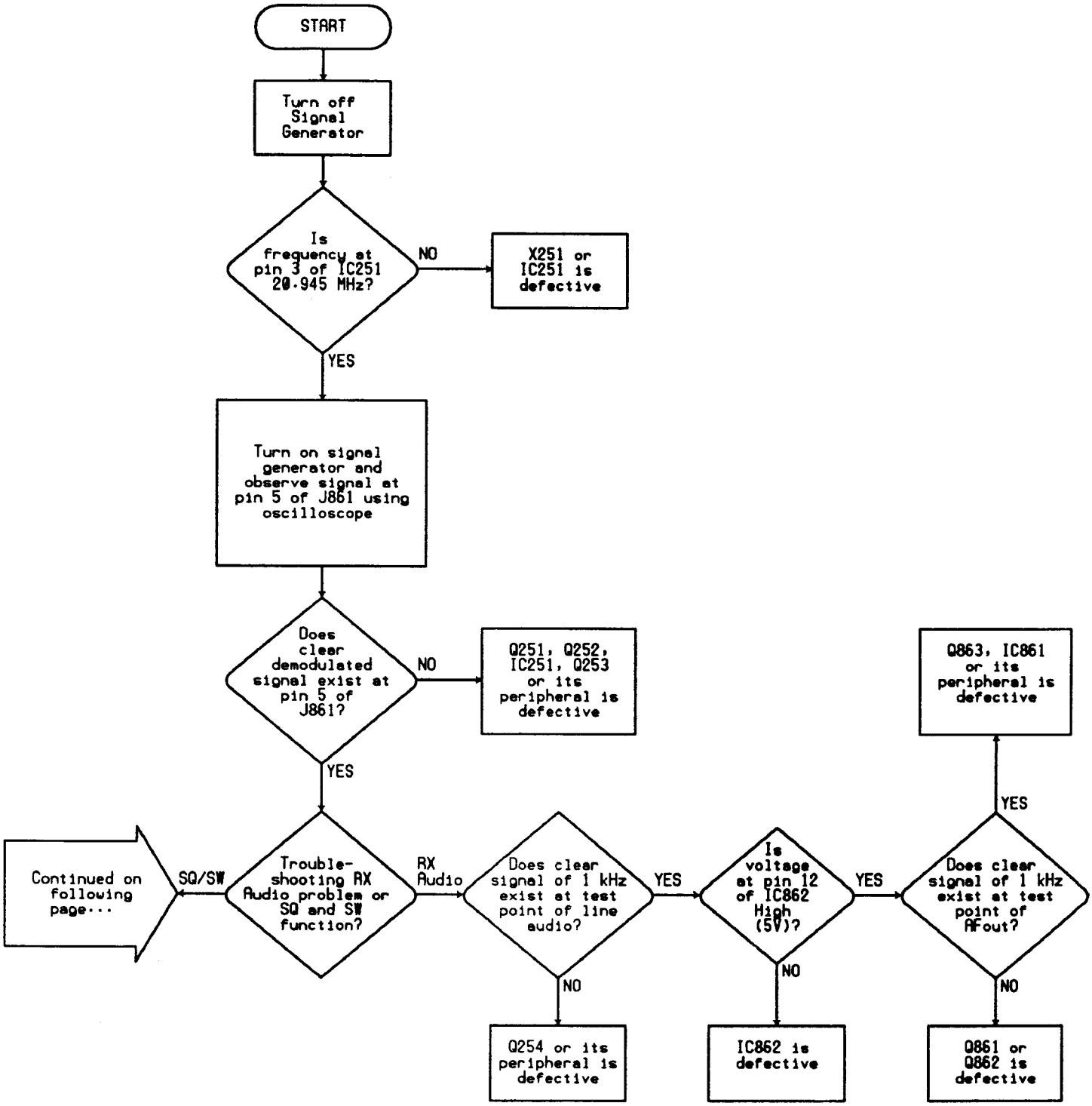

Chart 2 - 2.7a — DM-201 Troubleshooting

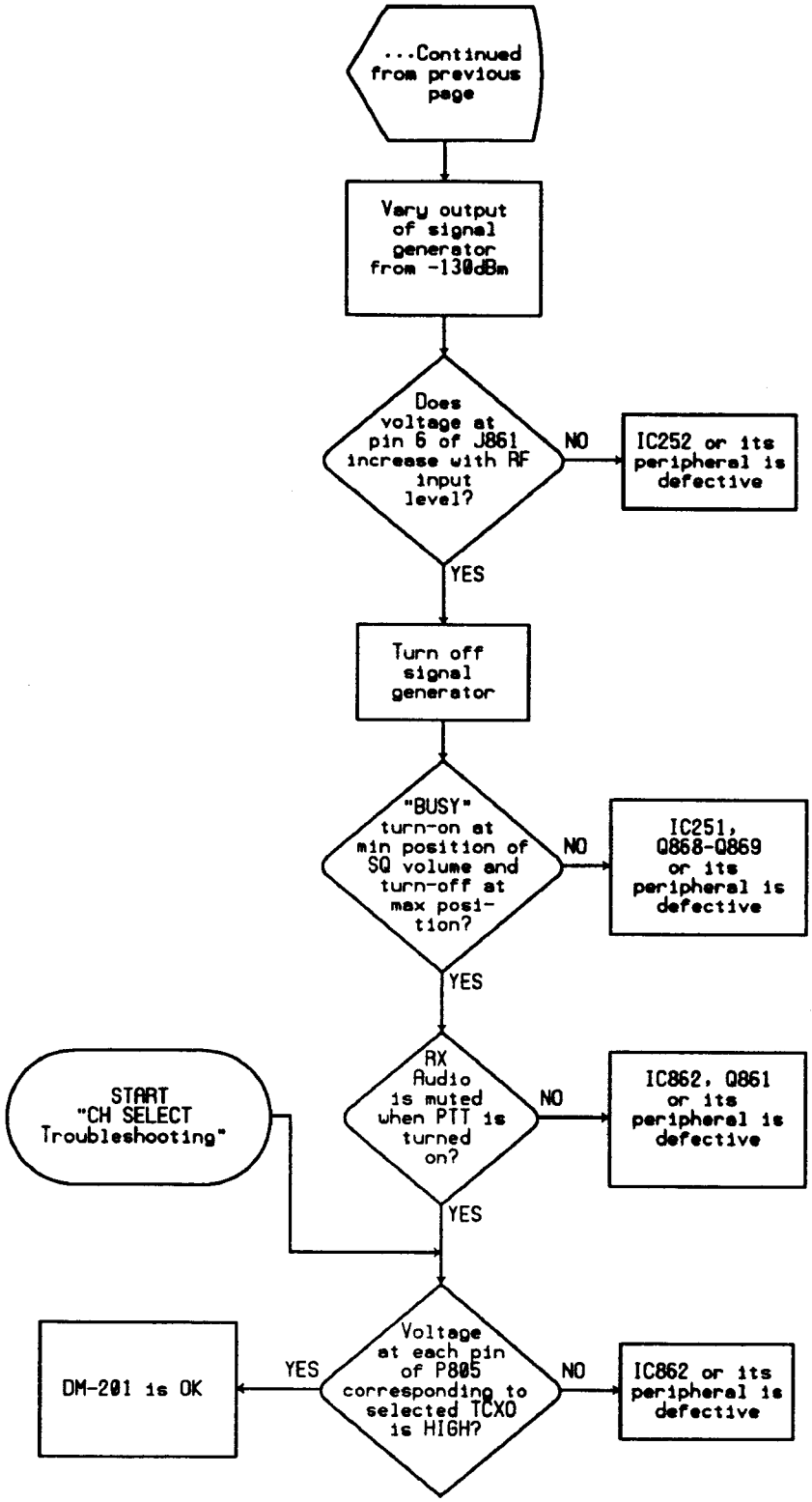

Chart 2 - 2.7b — DM-201b Troubleshooting (Continued)

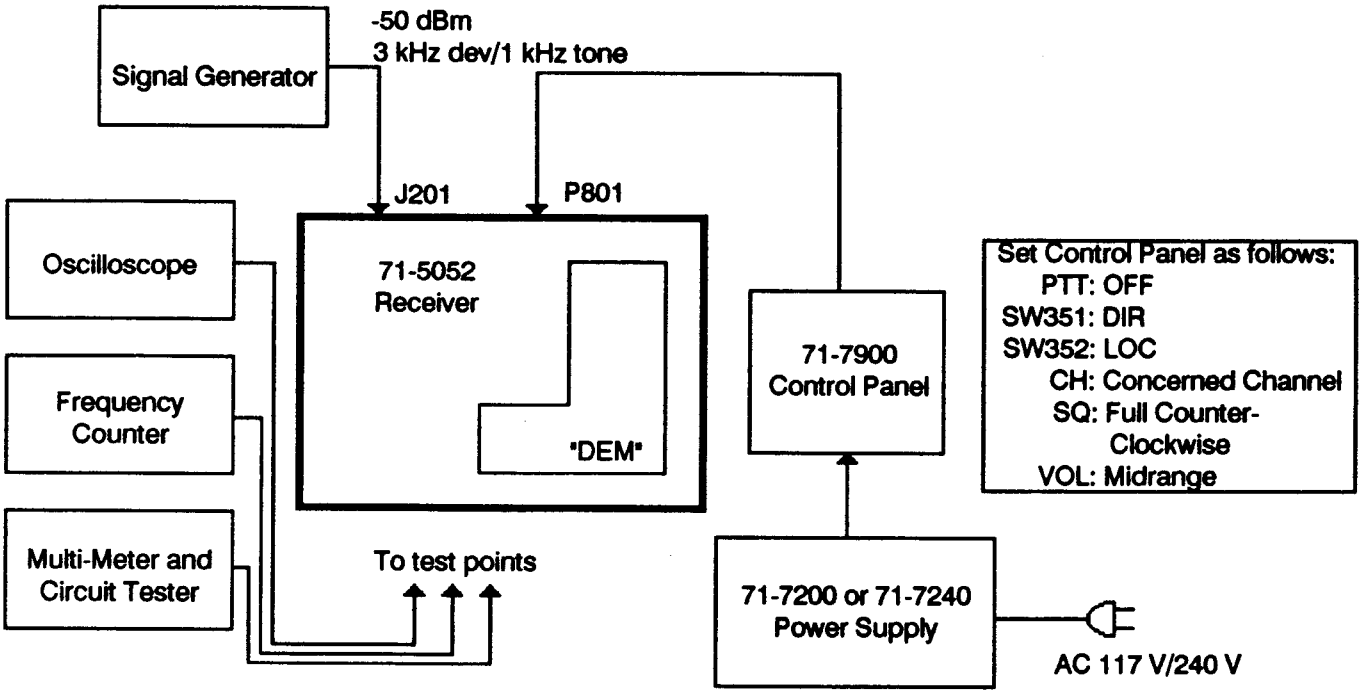

Figure 2 - 2.7 — Set-up for DM-201 Troubleshooting

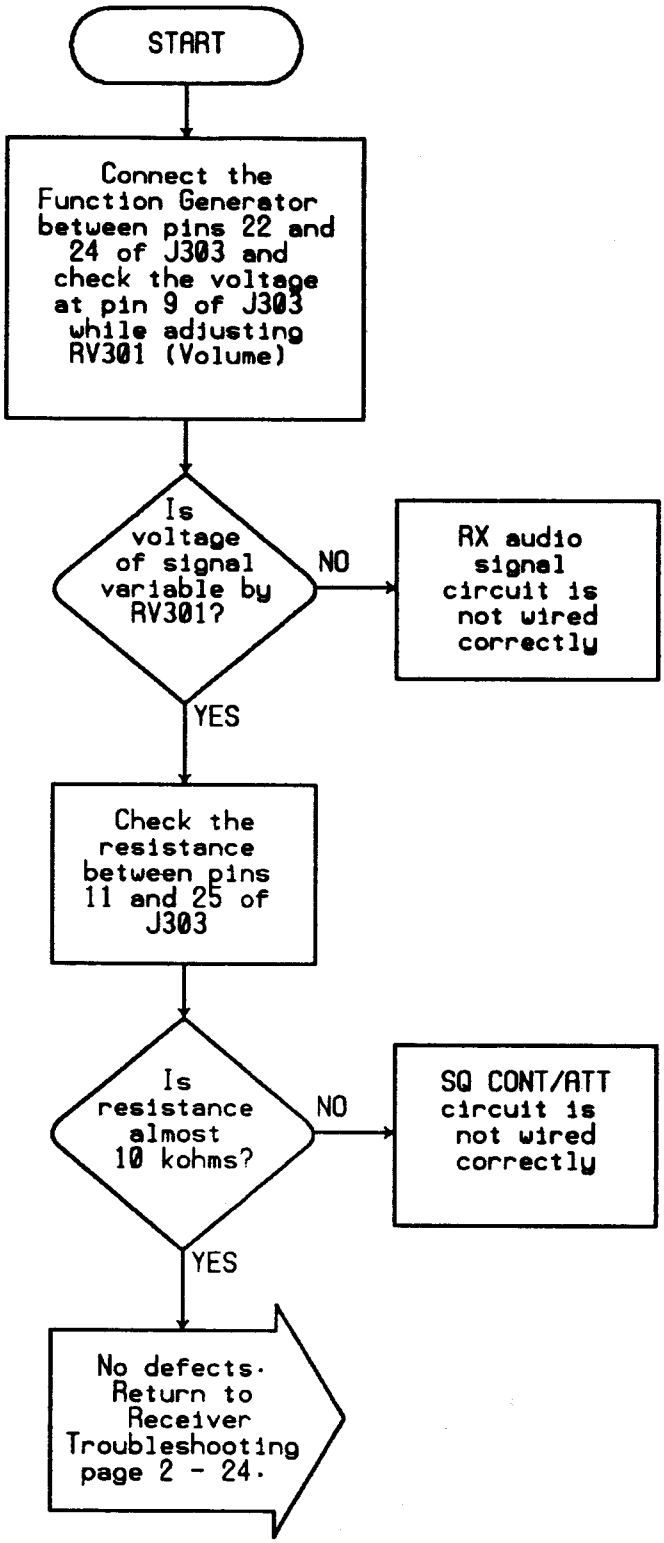

Chart 2 - 2.8 — RX Audio Troubleshooting

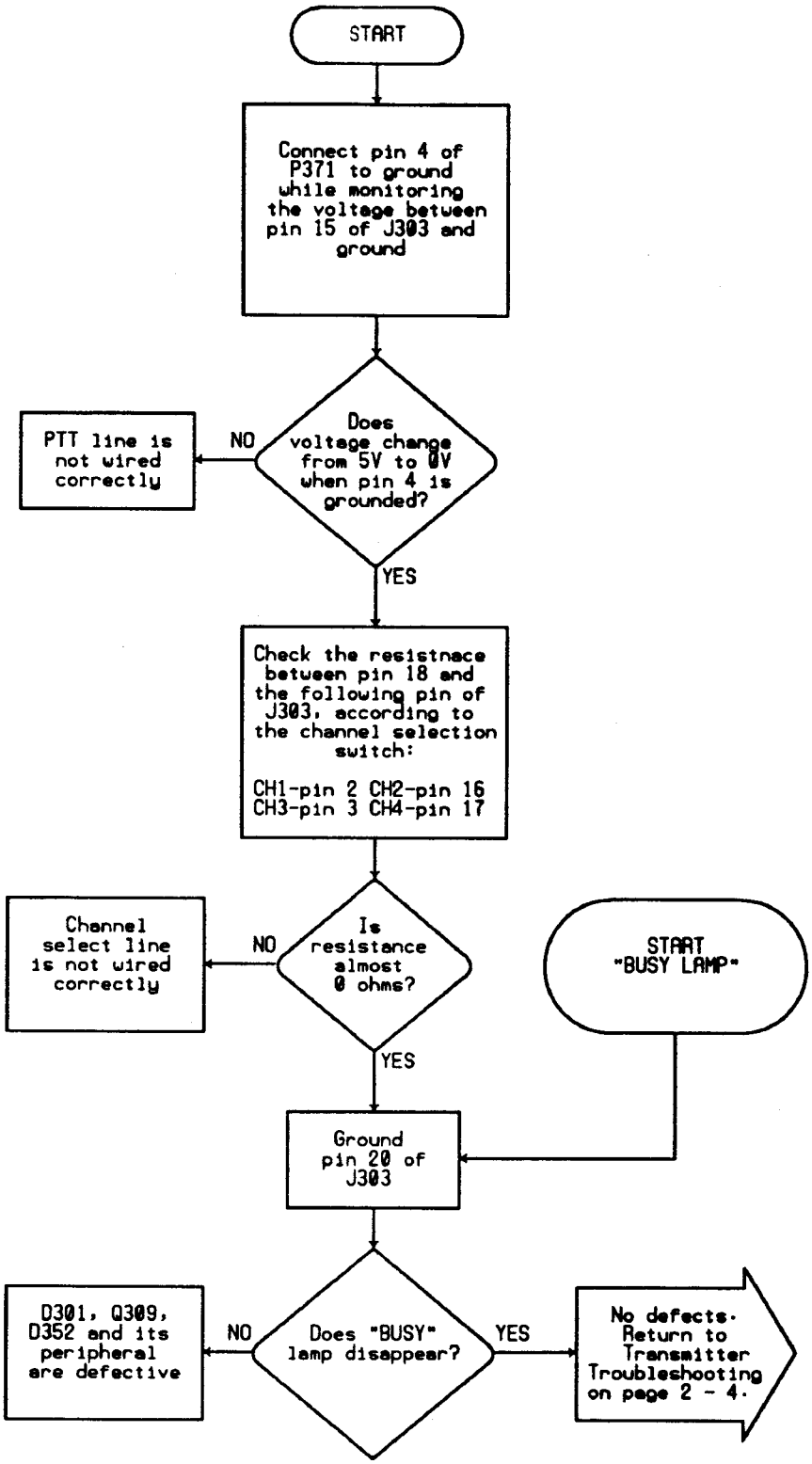

Chart 2 - 2.9 — RX Switch Troubleshooting

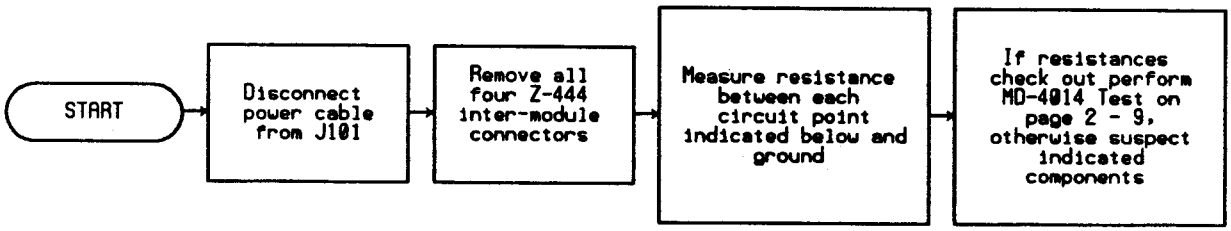

Chart 2 - 3.1 — 71-5051 DC Power-line Check

Table 2 - 3.1

Module	Line	Meaure Points	Resistance to Ground	Suspect Components
Modulator MD-4014	13.8 V	J101 pin 1	> 4 kΩ	D401, IC401, IC402
	9 V	IC401 pin 3	> 200 Ω	IC401, Q103, Q703, IC101, IC102, X701, IC704, IC705, Q701, Q702
	5 V	IC402 pin 1	> 500 Ω	IC402, IC103, IC702, IC703
	TX 9 V	J104 pin 3	> 100 kΩ	Q103
Oscillator LOT-409	13.8 V	P702 pin 4	>10 kΩ	Q708
	9 V	P702 pin 3	> 2 kΩ	Q706, Q707, Q709, Q710
	TX 9 V	P702 pin 2	> 2 kΩ	C779, C781
Buffer ML-404	13.8 V	J110 pin 1	>100 kΩ	J110, J111
	TX 9 V	J110 pin 3	>1 kΩ	Q104, IC104, IC105, IC106, IC107, IC108
Power Amplifier PA-436	13.8 V	J115 pin 4	> 4 kΩ	Q108, Q109, Q110
	TX 9V	J115 pin 2	>4 kΩ	Q106, Q107

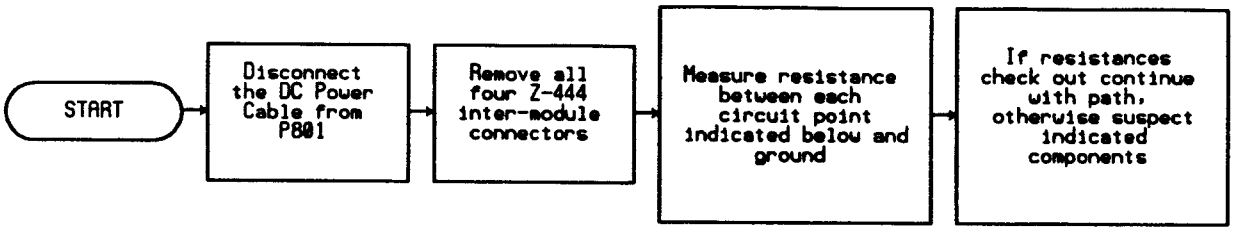

Chart 2 - 3.2 — 71-5052 DC Power-Line Check

Table 2 - 3.2

Module	Line	Meaure Points	Resistance to Ground	Suspect Components
Demodulator DM-201	13.8 V	J801 pin 1	> 500 Ω	D421, IC421, IC861
	9 V	P804 pin 2	> 100 Ω	IC421, D252, IC251, IC252, Q254, Q862, Q863, Q864, Q868
	PTT 9 V	P251 pin 3	> 10 kΩ	Q864
Oscillator LOR-408	9 V	P802 pin 3	> 1.2 kΩ	IC801, Q809, Q810, Q811, Q813
	PTT 9 V	P802 pin 2	> 5 kΩ	Q812
Mixer MXR-401	PTT 9 V	P212 pin 2	>1.5 kΩ	Q211, Q213
RF Amplifier RF-4012	PTT 9 V	P201 pin 2	>1.5 kΩ	Q201
RF Pre-Amplifier 71-7600	PTT 9 V	P201 pin 2	> 800 Ω	Q201, Q601

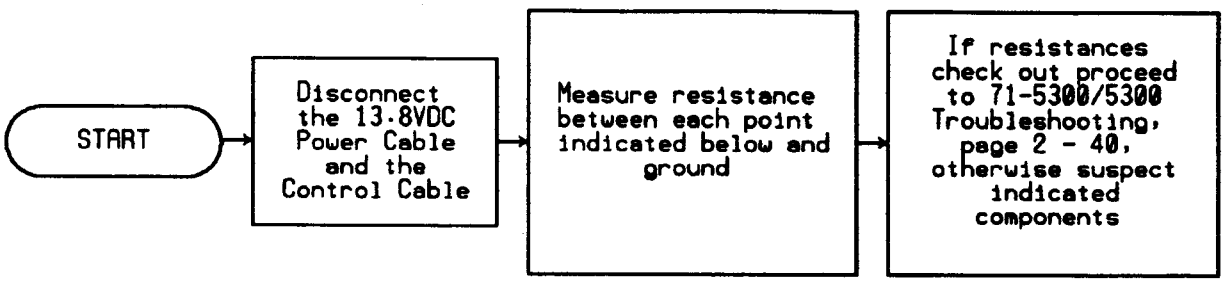

Chart 2 - 3.3 — 71-5300/5400 DC Power-line Check

Table 2 - 3.3

Module	Line	Meaure Points	Resistance to Ground	Suspect Components
71-5300	13.8 V	P6002	> 20 k Ω	D6001, Q5301, Q5001, Q5101, Q5121
	9 V	P6001 pin 13	> 5 kΩ	Q5303
71-5400	13.8 V	P6002	> 20 kΩ	D6001, Q5301, Q5001, Q5101, Q5121, Q5141
	TX 9 V	P6001 pin 13	> 5 kΩ	Q5303

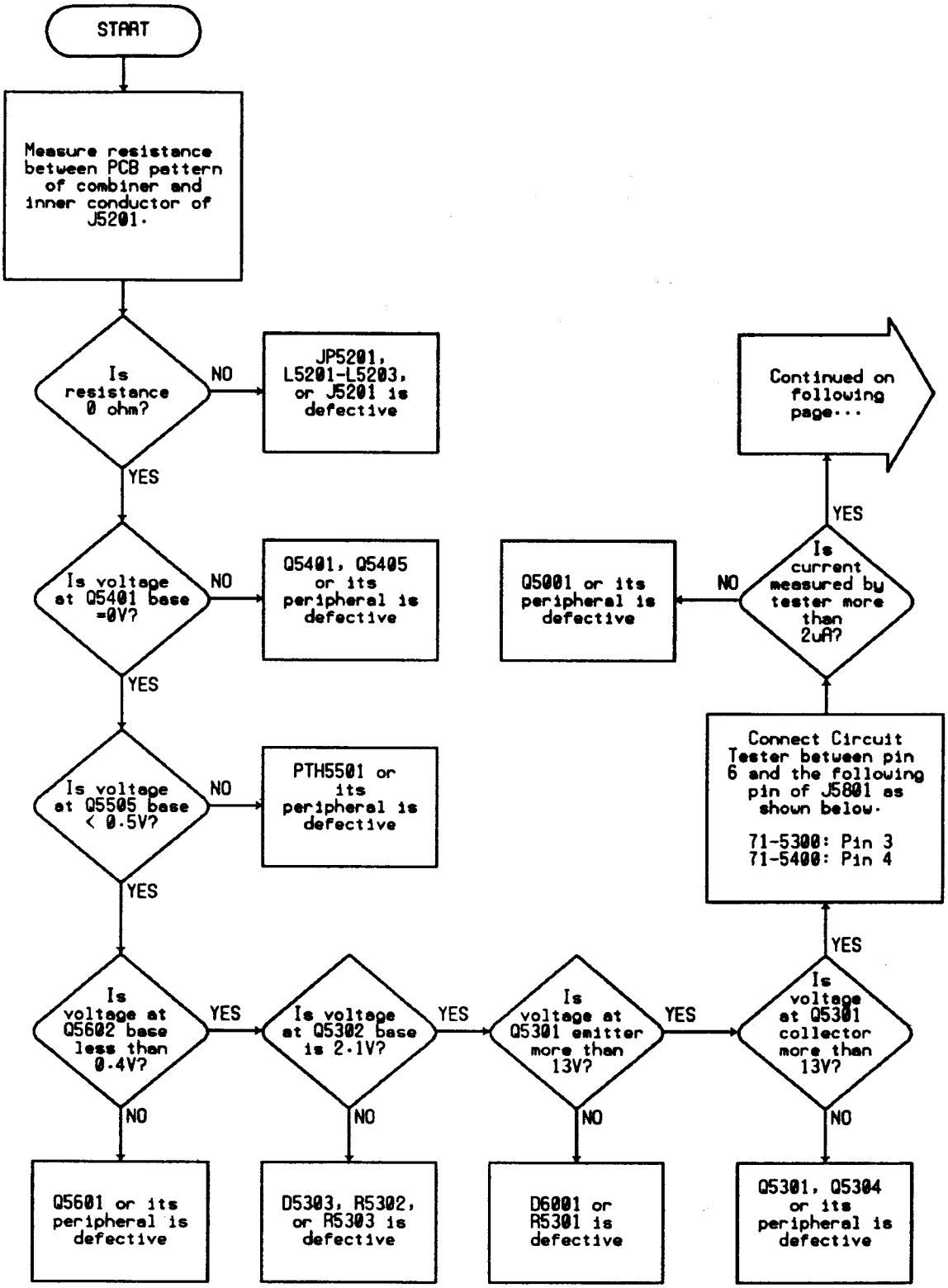

Chart 2 - 3.4a — 71-5300/5400 Troubleshooting

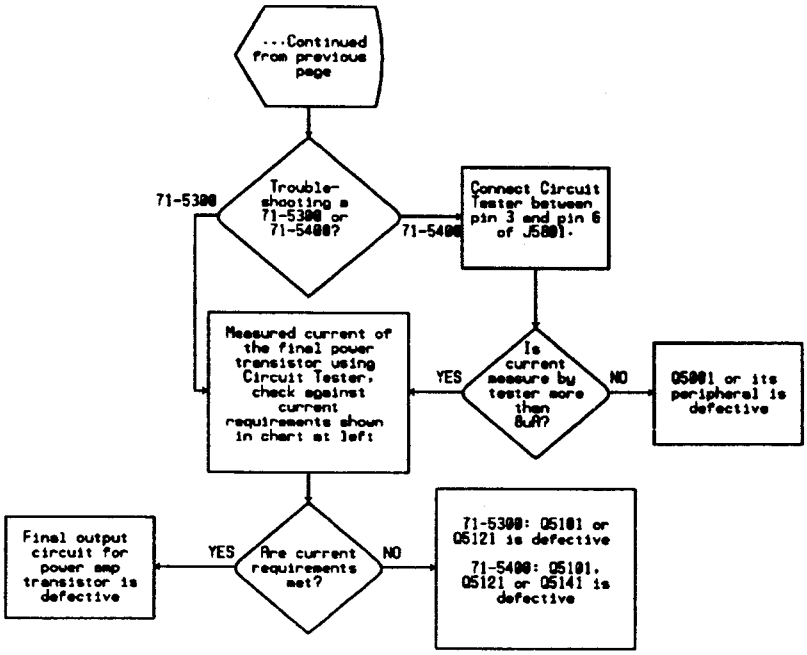

Chart 2 - 3.4b — 71-5300/5400 Troubleshooting

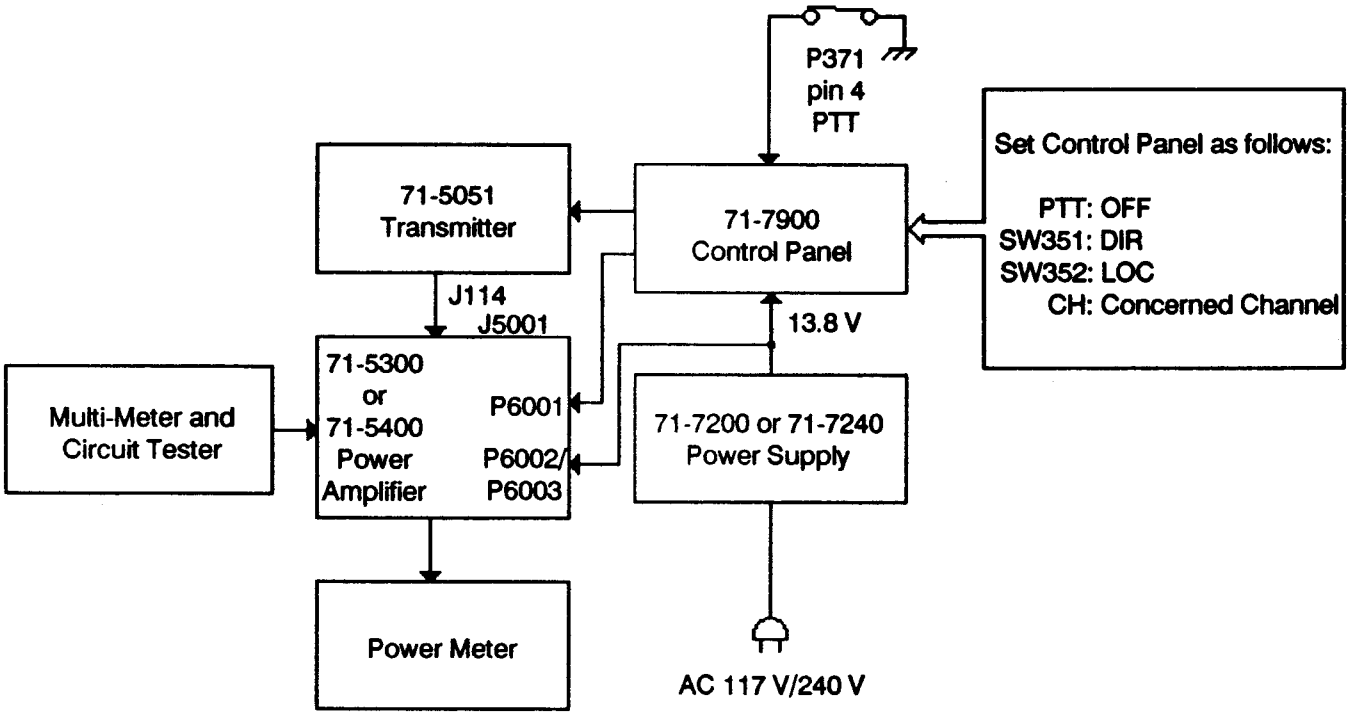

Figure 2 - 3.4 — Setup for 71-5300/5400 Troubleshooting

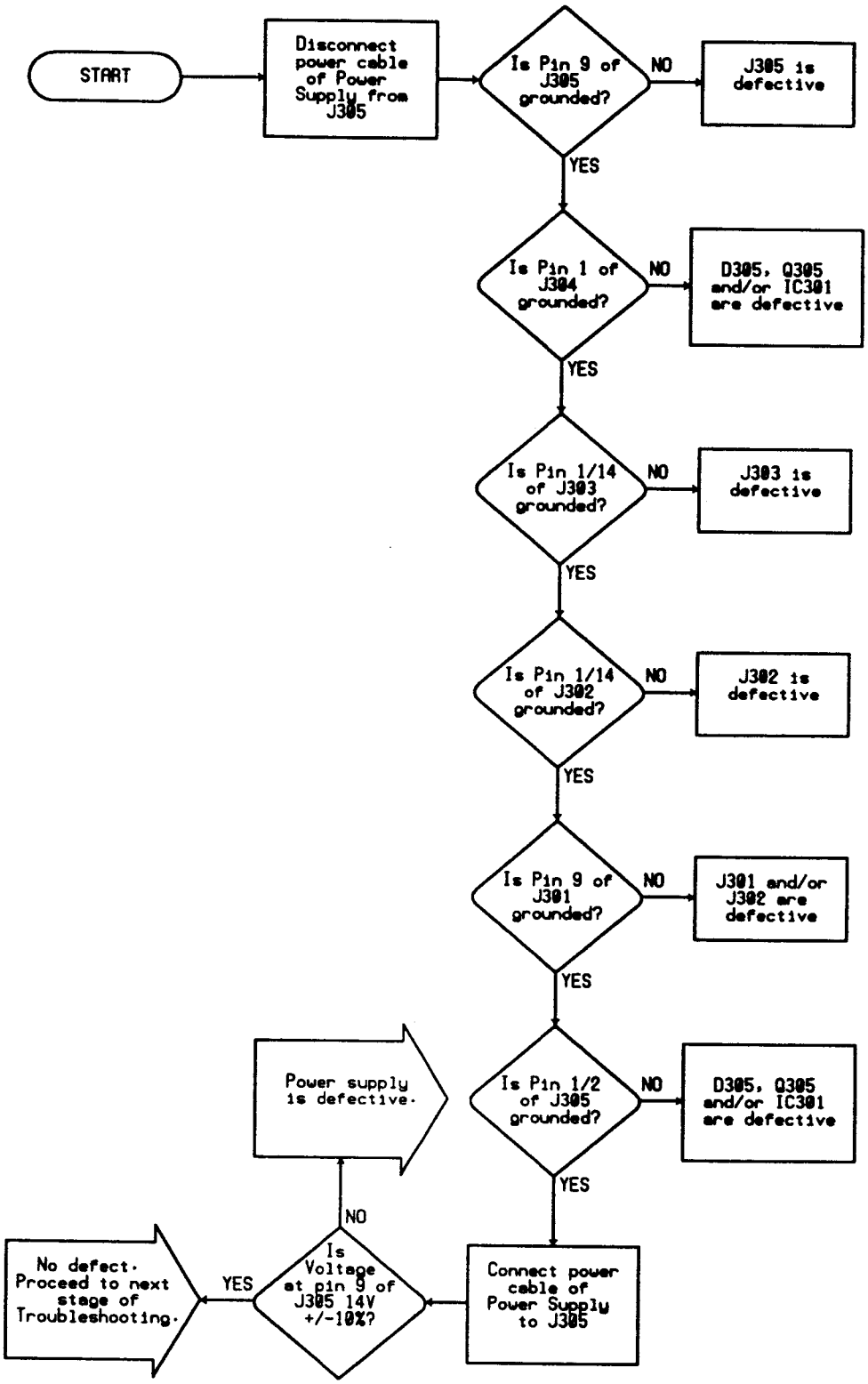

Chart 2 - 3.5 — Control Panel DC Power-Line Troubleshooting

SECTION 3

71-5051 EXCITER

NOTES

71-5051 CIRCUIT DESCRIPTION

The UHF transmitter is comprised of four modules in a single chassis: a synthesizer/modulator, a local-oscillator/mixer, a buffer, and an intermediate power amplifier. The synthesizer/modulator produces 80.2 MHz (A-Band) or 88.2 MHz (B-Band) that is modulated by audio signals applied from the Control Panel. The 80.2/88.2 MHz signal is then applied to the local-oscillator/mixer module where up to four channel elements (Temperature Compensated Crystal Oscillators) are found. Output of the channel element that is selected active by the F1-F4 SEL lines from the Control Panel is then multiplied by six and mixed with the 80.2/88.2 MHz signal from the synthesizer/modulator. The sum of the two frequencies is applied to the buffer module where it is amplified. Buffer output is then applied to the intermediate power amplifier for further amplification.

MODULATOR/SYNTHESIZER MODULE (MD-4014)

Voice signal from the Control Panel enters through J101 pin 11. The 6dB/octave high-pass frequency response of audio amplifiers within IC101 pre-emphasise voice modulation. A limiter within IC101 determines a maximum level and MAX DEV (Maximum Deviation Adjust) RV103 attenuates that level to match 5 kHz carrier deviation. Harmonics of clipped peaks are attenuated by a low-pass splatter filter comprised of L101, L102, and C105-C108. Contoured modulation is then imposed onto reverse bias of a varactor diode in the resonant tank of Voltage Controlled Oscillator Q701.

The subaudible tone from the Continuous-Tone Coded Squelch (CTCSS) encoder or the optional Digital Coded Squelch (DCS) encoder in the Control Panel enters through J101 pin 10. SIG ADJ RV103 provides adjustment CTCSS tone level; or, if DCS equipped, adjustment of higher frequency signals for balancing. When J101 pin 4 is logic low, Q101 is biased on so that coded squelch signals can pass from RV103 to amplifier IC102. The signal is split two ways: to the splatter filter input to mix with voice modulation, and to optional TCXO701 that is equipped with a frequency modulation port. Frequency response characteristic of the VCO port is high-pass due to effects from the synthesizer loop filter, and response of the reference oscillator is low-pass for the same reason. With the two equal and opposite ports combined, response is flat between 6 Hz and 250 Hz. If the station is not DCS equipped, CTCSS tones are all above crossover frequency and the reference oscillator port is not necessary.

Synthesizer output signal is produced by Voltage Controlled Oscillator (VCO) Q701. Q702 buffers the oscillator and drives RF gain stages within IC701. L704 and L705 interconnect the stages when tuned for resonance. Part of the intermediate signal appearing at IC701 pin 6 is filtered by L706-L708 and C750-C753, then applied to the local- oscillator/mixer through J103 and coax cable.

Varactor diode D701 is located in the VCO tank to provide resonance adjustment. The diode is reverse biased by a DC voltage produced by the phase-lock loop. To maintain VCO frequency at 80.2/88.2 MHz, the phase-lock loop varies diode bias, which varies internal capacitance of the diode.

VCO steering voltage is produced by a phase/frequency comparator within IC703. IC703 has two inputs: one is a frequency reference of 12.8 MHz which is produced by TCXO X701; the other is a VCO output- frequency sample that has been divided by sixteen by prescaler IC702. Frequency dividers within IC703 divide the two inputs to 12.5 kHz. The phase/frequency comparator compares both 12.5 kHz signals to pull its output down when the VCO down-count input is greater than the reference input, and pull its output high if the VCO down-count is less. When the VCO down-count drifts from the 12.5 kHz reference, comparator output steers the VCO resonance to compensate for the error.

A reference divider within IC703 divides the 12.8 MHz reference by 1024 to produce the 12.5 kHz reference. The loop divider, which includes prescaler IC702, divides 80.2 MHz/88.2 MHz VCO output by 6416 (A-Band) or 7056 (B-Band). A-Band/B-Band divide ratios of IC703 are determined by logic voltages on JU14.

A DC-coupled low-pass active filter comprised of IC704 attenuates noise from the comparator output and slows phase-lock loop response so that the loop will not correct frequency variations of VCO output as voice signals modulate the VCO.

Low-going pulses appear at IC703 pin 8 when the synthesizer loop is out-of-lock. The pulses are smoothed and buffered by IC705 to produce a logic high at IC705 pin 7 when the condition exists. When the loop is in lock, pin 7 is low. Out-of-lock logic is applied to the Buffer Module for shutting off transmitter RF output.

When active, Push-To-Talk (PTT) from the Control Panel applies ground to IC103 pin 1. D101 isolates IC103 input bias from the PTT line. IC103 output is high when PTT is active, which turns on Q102 and Q103. Q103 passes 9-Volt supply current to the TX indicator on the Control Panel, to the LOT-409 Module to switch on its multiplier stages, and to the ML-404 Module to switch on its RF amplifiers.

LOCAL-OSCILLATOR/MIXER MODULE (LOT-409)

The LOT-409 Module contains up to four channel elements, each of which is a Temperature Controlled Crystal Oscillator. Frequency of the active TCXO output signal is multiplied by six, then the high-frequency signal is mixed with 80.2/88.2 MHz output of the MD-4014 Module. The sum component of the mix is then amplified further for transmission.

A channel is selected when one of the F1-F4 SEL lines is grounded by the Control Panel. The logic low is inverted by IC103, and the respective transistor pair (Q951/Q952 through Q957/Q958) is turned on, which applies DC source to the selected TCXO. TCXO output is coupled to frequency doubler Q706 when its corresponding gate diode (D951 through D954) is forward biased by the gated-on DC source to the TCXO.

Frequency doubler output drives frequency tripler Q707, of which output is coupled to three-section helical resonator FIL701. Resonator output is amplified by Q708, then filtered again by three-section helical resonator FIL702. Metering points TP15, TP16, and TP17 along this multiplier/filter/amplifier string are diode-detected samples of interstage RF signal.

Resonator FIL702 signal is applied to a double-balance mixer comprised of transformers L719 and L721, plus diode bridge D709. Undesired signals from the MD-4014 Module are attenuated by LC tanks L116 and L118, and the desired 80.2/88.2 MHz signal is passed to the other balanced mixer input. Both mixer input signals are cancelled out at the mixer output which is across the center-taps of the mixer input transformers. Only the sum component, which is at carrier frequency, appears at mixer output. This signal is amplified by Q710, then passed to the ML-404 Module.

DC source gate Q709, which is biased by Q103 on the MD-4014 Module, shuts off multipliers Q706 and Q707 while PTT is inactive.

BUFFER MODULE (ML-404)

The ML-404 Module pre-amplifies RF output signal from the LOT-409 Module to 300 mW for driving the Power Amplifier Module. Helical resonators FIL101, FIL102, and FIL103, plus stage gain RF amplifers IC104, IC105, IC106, and IC107 amplify mixer signal and reject undesired spurious signals. A sample of IC107 output is extracted by C164 for diode detection by D110 to produce RF-power indicating test voltage at the test point.

IC107 output is amplified further by IC108 to produce 300 mW (at 50 ohms) at J112. Test point TP8 is a diode-detected sample of IC108 output. Q104 supplies DC source current to IC108, and it is controlled by Q105, which is controlled by lock-detector signal from the synthesizer on the MD-4014 Module. If the phase-locked loop should unlock, IC108 is shut down to prevent transmission of spurious signals.

INTERMEDIATE POWER AMPLIFIER MODULE (PAT-436)

The PAT-436 Module amplifies its 300 mW RF input to 5 Watts using two common-emitter transistor stages Q109 and Q110. A low-pass filter comprised of L112-L114 attenuates the second harmonic of the channel frequency and beyond. A directional coupler comprised of PC plating couples forward power to D111. A DC voltage is produced at APC RV104 that increases with forward power.

Q106 and Q107 is a differential amplifier that compares the power detecting voltage from APC (Automatic Power Control) RV104 against a bias voltage determined by D112, R161, and R162. Differential amplifier output drives Q108 that supplies DC source current to Q109. As PAT-436 Module output power increases, drive to Q108 decreases, current to Q109 decreases, and IPA Module RF output decreases. This negative-feedback loop holds output power constant at a level established by APC RV104.

DC VOLTAGE CHARTS

SET-UP: CHANNEL 1 SELECTED

TRANSISTORS

SYMBOL	TYPE	MODE	DC VOLTAGE BASE (GATE)	DC VOLTAGE COLL (DRN)	DC VOLTAGE EMIT (SRC)	FUNCTION
Q101	2SK323	TX	6.5	5.9	5.9	SIGNALING AUDIO GATE
Q102	2SC2462	TX	0.7	0	0	TX 9V SWITCH
		RX	0	8.5	0	
Q103	2SB945	TX	8.2	8.7	8.8	
		RX	8.9	3.9	9.0	
Q104	2SD1273	TX	8.6	8.8	8.0	TX RF-MUTE SWITCH
Q105	2SC2462	TX	0.3	8.6	0	
Q106	2SC2462	TX	1.3	12.7	0.7	AUTOMATIC POWER
Q107	2SC2462	TX	1.3	8.8	0.7	CONTROL
Q108	2SB945	TX	12.7	5.2	13.3	
Q109	2SC3020	TX	0 5	.3	0	RF DRIVER AMPLIFIER
Q110	2SC3021	TX	0	13.3	0	RF FINAL AMPLIFIER
Q701	2SK192	TX	0	7.7	0.5	VCO
Q702	2SC2735	TX	3.4	8.1	3.8	VCO BUFFER
Q703	2SC2462	TX	8.8	8.8	8.1	ACTIVE CAPACITOR
Q704	2SC2620	TX	0.5	3.8	0	PULSE AMPLIFIER
Q706	2SC3356	TX	1.8	8.2	1.4	FREQUENCY DOUBLER
Q707	2SC3355	TX	0	7.2	0	FREQUENCY TRIPLER
Q708	2SC3355	TX	1.2	5.7	1.0	RF AMPLIFER

TRANSISTORS (Continued)

SYMBOL	TYPE	MODE	DC VOLTAGE			FUNCTION
			BASE (GATE)	COLL (DRN)	EMIT (SRC)	
Q709	2SC2462	TX RX	9.0 0	9.0 9.0	8.2 0	9V SWITCH
Q710	2SC3356	TX	1.0	8.2	0.3	COAX DRIVER
Q951	2SA1122	TX	8.0	8.6	8.8	TCXO-1 SWITCH
Q952	2SC2462	TX	0.7	0	0	
Q953	2SA1122	TX	8.6	0.2	8.8	TCXO-2 SWITCH
Q954	2SC2462	TX	0	8.8	0	
Q955	2SA1122	TX	8.8	0.2	8.8	TCXO-3 SWITCH
Q956	2SC2462	TX	0	8.8	0	
Q957	2SA1122	TX	8.8	0.2	8.8	TCXO-4 SWITCH
Q958	2SC2462	TX	0	8.8	0	

INTEGRATED CIRCUITS

SYMBOL	TYPE	PIN NUMBER									FUNCTION
		1 (10)	2 (11)	3 (12)	4 (13)	5 (14)	6 (15)	7 (16)	8 (17)	9) (18	
IC101	DH-2527	0	0	4.4	4.4	— —	2.0	8.8	4.4	4.4	MODULTN
IC102	HA17458PS	4.4	4.4	4.4	0	4.4	4.4	4.4	8.8	— —	OP AMP.
IC104	DH-1067A	0	0	0	8.2	0	0	— —	— —	— —	RF AMP.
IC105	DH-1067A	0	0	0	7.7	0	0	— —	— —	— —	RF AMP.
IC106	DH-1067A	0	0	0	7.7	0	0	— —	— —	— —	RF AMP.
IC107	DH-1067A	0	0	0	7.7	0	0	— —	— —	— —	RF AMP.
IC108	UP-425P7.2A UP-460P7.2A	0	0	7.2	0	8.0	0	0	— —	— —	RF PRE-DRIVER
IC401	TA78009AP	13.8	0	9.0	— —	— —	— —	— —	— —	— —	9V REG.
IC402	M5278LO5	5.0	0	12.2	— —	— —	— —	— —	— —	— —	5V REG.
IC701	DH-2501	0 (0)	0 (0)	8.5 (0)	8.5	0	0	0	8.4	8.4	RF AMP.
IC702	uPB571C	5.0	2.3	— —	0	3.8	5.0	5.0	5.0	— —	PRESCLR
IC703	MC145106P	5.0 (5.0)	2.3 (0)	2.4 (5.0)	2.4 (5.0)	1.9 — —	4.5 (0)	3.5 (0)	5.0 (5.0)	5.0 (0)	PHASE DETECTOR
IC704	TL082CP	3.3	3.5	3.5	0	3.5	3.5	4.1	8.8	— —	LOOP FILTER
IC705	HA17458PS	5.0	5.0	5.0	0	5.0	5.0	0	8.8	— —	LOCK DTCT

71-5051 ALIGNMENT

Test Equipment Required

Test Instrument	Instrument Capabilities	Use
RF Wattmeter	10 watts; 406-470 MHz; 50-ohm circuit	Transmitter power measurements
RF Load Resistor	50-ohm; 50 watts	Antenna dummy load
Frequency Modulation Meter	406-470 MHz; peak-responding, 5kHz range	Modulation level measurements
Frequency Meter or Frequency Counter	80-470 MHz; 1.0 ppm accuracy	Carrier frequency measurement
Audio Generator	5-1000 Hz sine-wave; 0-3 Vrms output	Modulation level measurements
AC Voltmeter	10 mV to 3 V_{rms}	Audio level adjustments
Digital Multimeter	0.1 to 20 V DC	Test point measurements and power supply setup

SETUP

1. Connect a resistive, 50-ohm RF load and a wattmeter to Antenna Connector J114.

2. Install channel elements on the Exciter Board as follows:

   Channel 1: TCXO1 Channel 3: TCXO3
   Channel 2: TCXO2 Channel 4: TCXO4

3. Turn on power the Power Supply, then set Control Panel switches as follows:

CHANNEL for the center-most transmit frequency
LOCAL/REMOTE to Local
DIRECT/REPEAT to Direct

4. Initiate transmit mode from the Control Panel by pressing the hand microphone PTT bar.

OSCILLATOR

1. Adjust OSCILLATOR L711 to obtain a DC voltage peak on TP15.

2. Adjust FILTER FL701 to obtain a DC voltage peak on TP16.

3. Adjust FILTER FL702 to obtain a DC voltage peak on TP17.

DRIVER

1. Adjust FILTER FL101, FILTER FL102, and FILTER FL103 to obtain a DC voltage peak on TP7.

2. Select each of the other channels while noting TP7 voltage. Slightly readjust the last section of FILTERS FL101, FL102, and FL103 to obtain equal TP7 voltage on all channels.

POWER AMPLIFIER

1. Set POWER CONTROL RV104 to maximum (full clockwise).

2. Adjust CV101 and CV102 to obtain maximum RF output power at J114.

3. Adjust POWER CONTROL RV104 to obtain 5.5 watts at 50-ohm J114.

MODULATOR

5.5 VDC INSTEAD OF 4.5.

1. Adjust VCO L702 to obtain 4.5 DC volts on pin 6 of J102.

2. Measure frequency of the Modulator Output Signal at J103 with a frequency counter. Adjust MODULATOR TCXO X701 to obtain exactly 80.20000 MHz (A-Band) or 88.20000 MHz (B-Band). Re-connect P103 to J103.

3. If the 70-5051 Transmitter is not equipped with Digital Coded Squelch (DCS), skip this step.

   DCS

   a. Apply a 5 Hz, 1-Volt peak-to-peak, sine-wave signal to pin 5 of P308 (SIG IN) and measure modulation of RF signal at J114. Note carrier deviation (should be approximately 1 kHz).

   PL Tone

   b. Remove the 5 Hz signal and apply a 200 Hz, 1-Volt peak-to- peak, sine-wave signal to pin 5 of P308. Adjust RV103 to obtain the same carrier deviation as measured above.

4. Apply to pin 1 of P371 (MIC):

   (A-Band) 10 volts p-p of 1 kHz signal, or,
   (B-Band) 10 volts p-p of 500 Hz signal.

5. Adjust MODULATION LIMIT RV102 to obtain 4.8 kHz total carrier deviation (including CTCSS signal, if used).

6. Apply 310 mV of 1kHz sine-wave signal to pin 1 of P371.

7. Adjust MODULATOR INPUT SENSITIVITY RV101 to obtain 3kHz carrier deviation.

CHANNEL ELEMENTS

1. Select a channel and adjust its TCXO for zero transmitted carrier frequency error.

2. Repeat for all other channels.

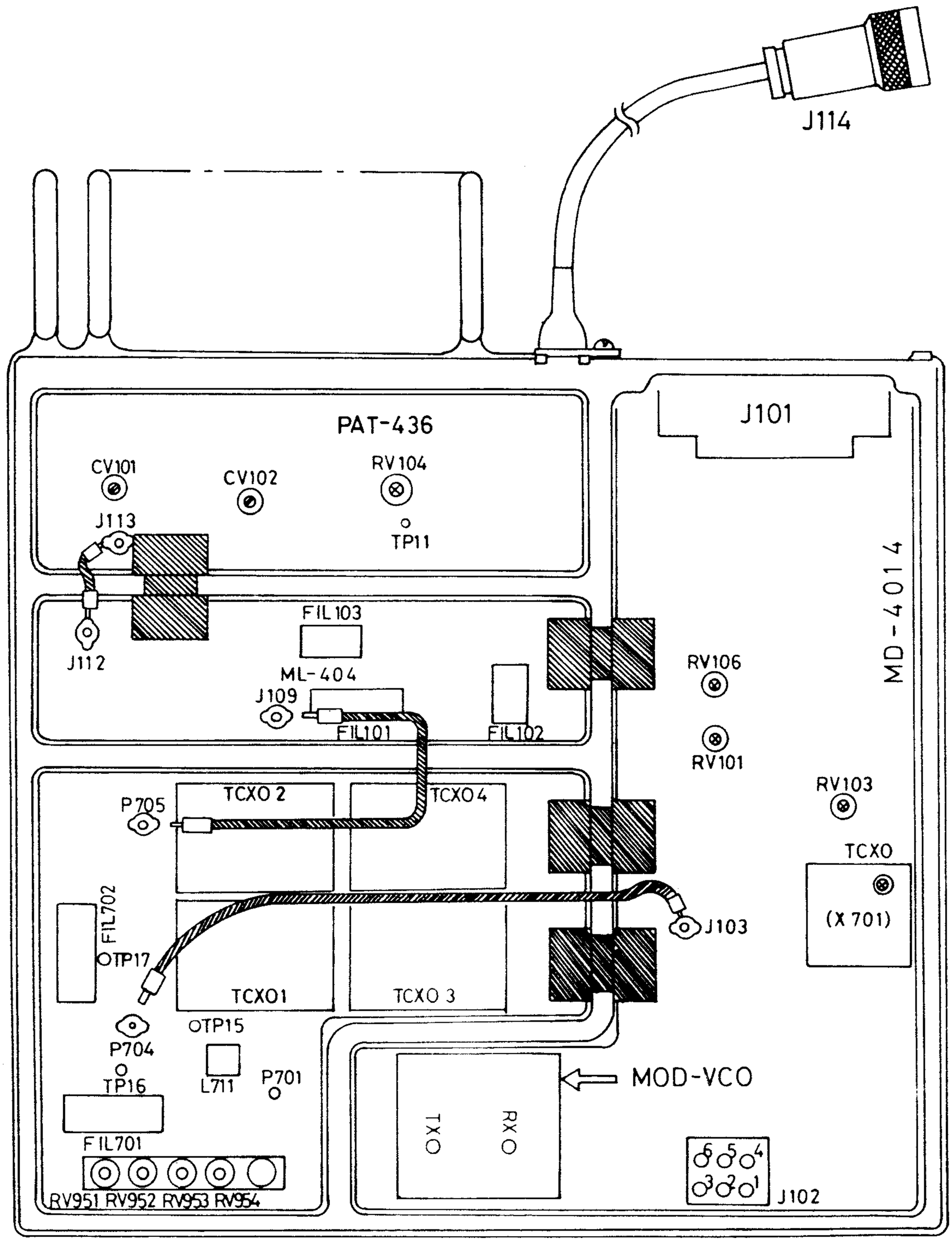

Figure 3 - 1 — 71-5051 Adjustment Map

NOTES

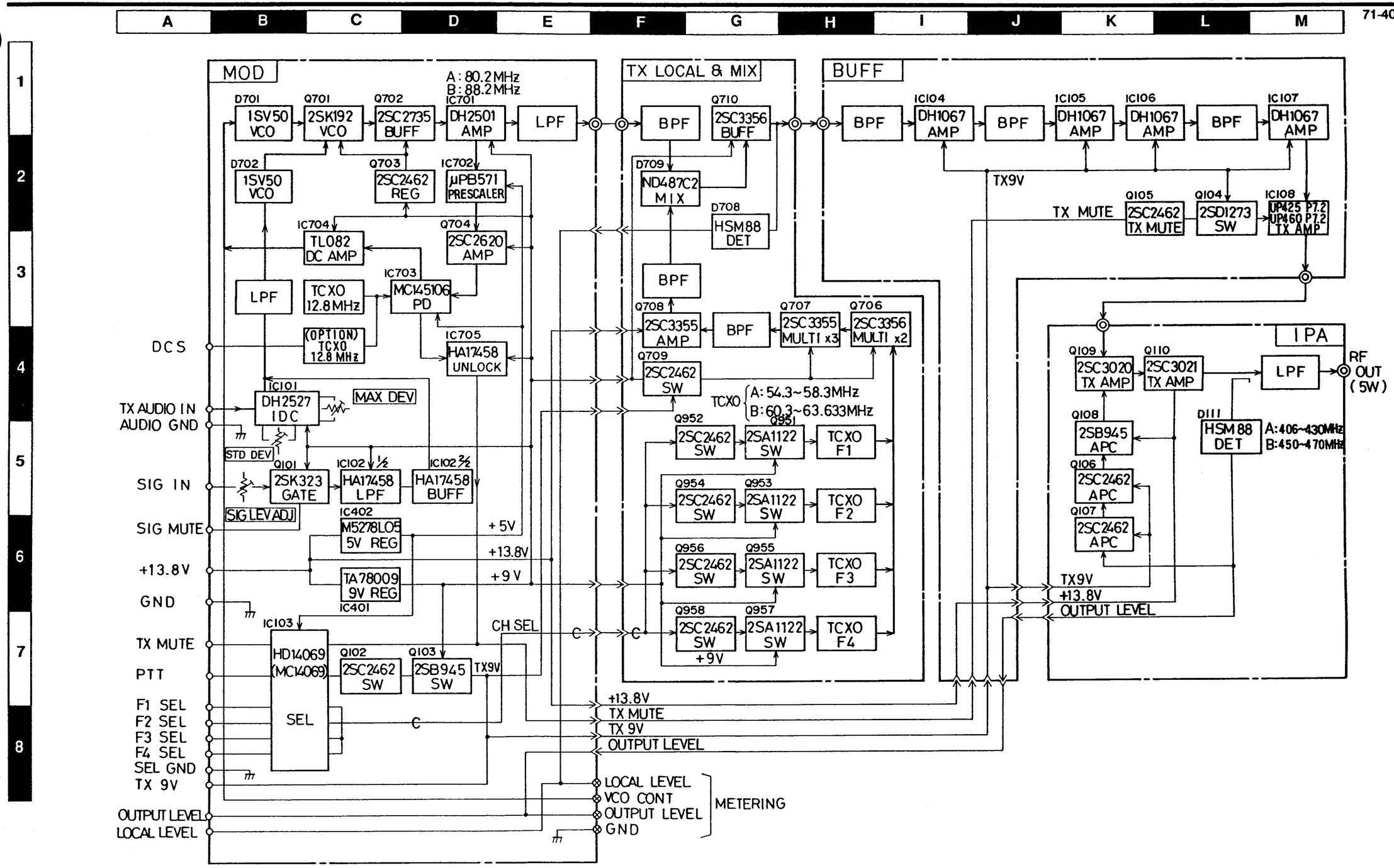
MOD
A: 80.2MHz
B: 88.2MHz
D701 1SV50 VCO
Q701 2SK192 VCO
Q702 2SC2735 BUFF
IC701 DH2501 AMP
LPF
D702 1SV50 VCO
Q703 2SC2462 REG
IC702 μPB571 PRESCALER
IC704 TL082 DC AMP
Q704 2SC2620 AMP
LPF
TCXO 12.8MHz
IC703 MC145106 PD
(OPTION) TCXO 12.8 MHz
IC705 HA17458 UNLOCK
DCS
IC101 DH2527 IDC
MAX DEV
TX AUDIO IN
AUDIO GND
STD DEV
SIG IN
Q101 2SK323 GATE
IC102 1/2 HA17458 LPF
IC102 2/2 HA17458 BUFF
SIG LEV ADJ
SIG MUTE
IC402 M5278LO5 5V REG
+5V
+13.8V
+13.8V
TA78009 9V REG
IC401
+9V
GND
IC103 HD14069 (MC14069) SEL
CH SEL
TX MUTE
PTT
Q102 2SC2462 SW
Q103 2SB945 SW
TX9V
F1 SEL
F2 SEL
F3 SEL
F4 SEL
SEL GND
TX 9V
OUTPUT LEVEL
LOCAL LEVEL
TX LOCAL & MIX
BPF
Q710 2SC3356 BUFF
D709 ND487C2 MIX
D708 HSM88 DET
BPF
Q708 2SC3355 AMP
BPF
Q707 2SC3355 MULTI x3
Q706 2SC3356 MULTI x2
Q709 2SC2462 SW
TCXO A: 54.3~58.3MHz B: 60.3~63.633MHz
Q952 2SC2462 SW
Q951 2SA1122 SW
TCXO F1
Q954 2SC2462 SW
Q953 2SA1122 SW
TCXO F2
Q956 2SC2462 SW
Q955 2SA1122 SW
TCXO F3
Q958 2SC2462 SW
Q957 2SA1122 SW
TCXO F4
+9V
+13.8V
TX MUTE
TX 9V
OUTPUT LEVEL
LOCAL LEVEL
VCO CONT
OUTPUT LEVEL
GND
METERING
BUFF
BPF
IC104 DH1067 AMP
BPF
IC105 DH1067 AMP
IC106 DH1067 AMP
BPF
IC107 DH1067 AMP
TX9V
TX MUTE
Q105 2SC2462 TX MUTE
Q104 2SD1273 SW
IC108 UP425 P7.2 UP460 P7.2 TX AMP
IPA
Q109 2SC3020 TX AMP
Q110 2SC3021 TX AMP
LPF
RF OUT (5W)
Q108 2SB945 APC
D111 HSM88 DET
A:406~430MHz
B:450~470MHz
Q106 2SC2462 APC
Q107 2SC2462 APC
TX9V
+13.8V
OUTPUT LEVEL

71-4050/71-4120

A B C D E F G H I J K L M

1 2 3 4 5 6 7 8

TOP VIEW

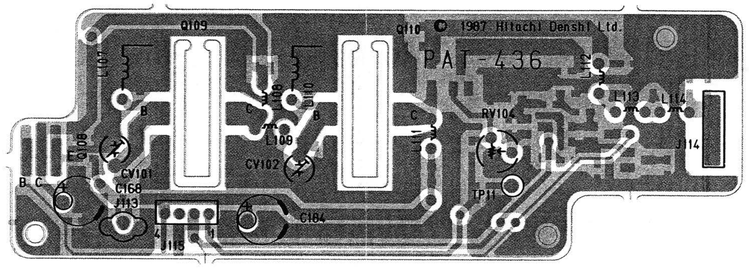

BOTTOM VIEW

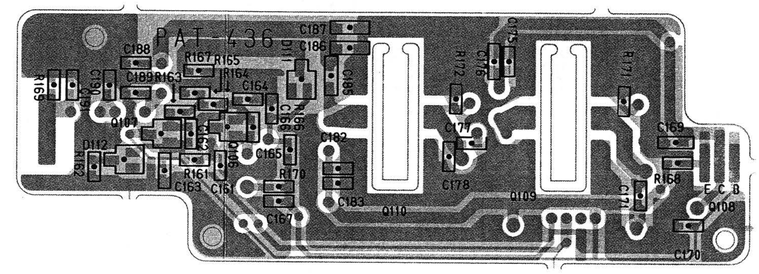

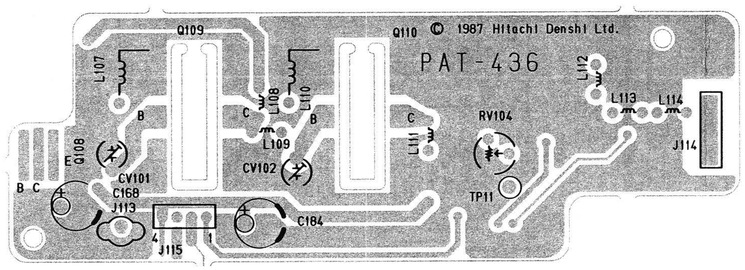

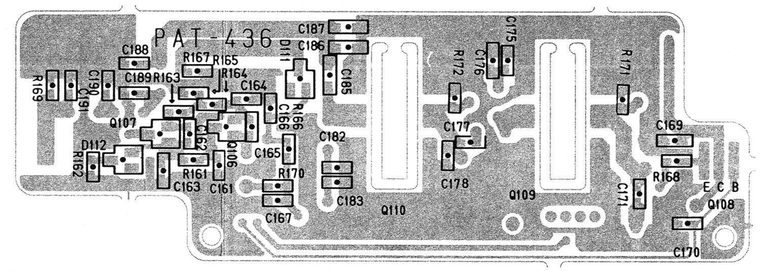

BLUE VISIBLE PLATING

RED UNDERSIDE PLATING

PAT-436 SCHEMATIC

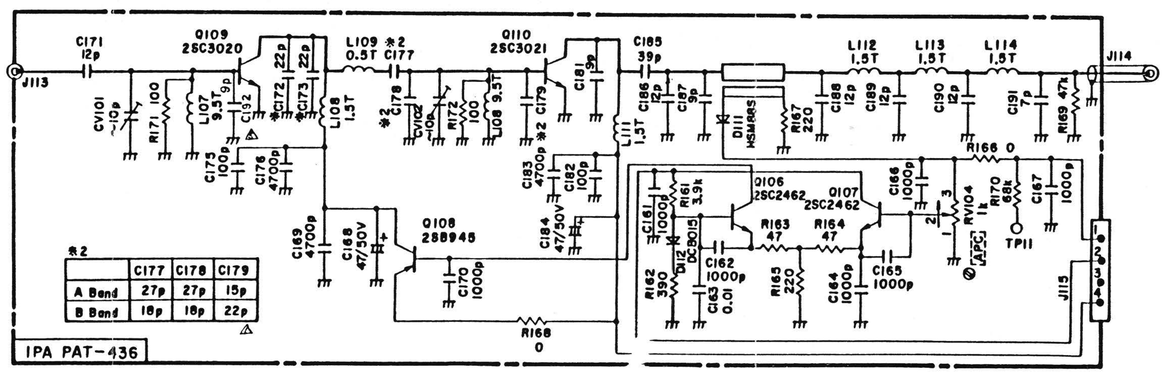

	C177	C178	C179
A Band	27p	27p	15p
B Band	18p	18p	22p

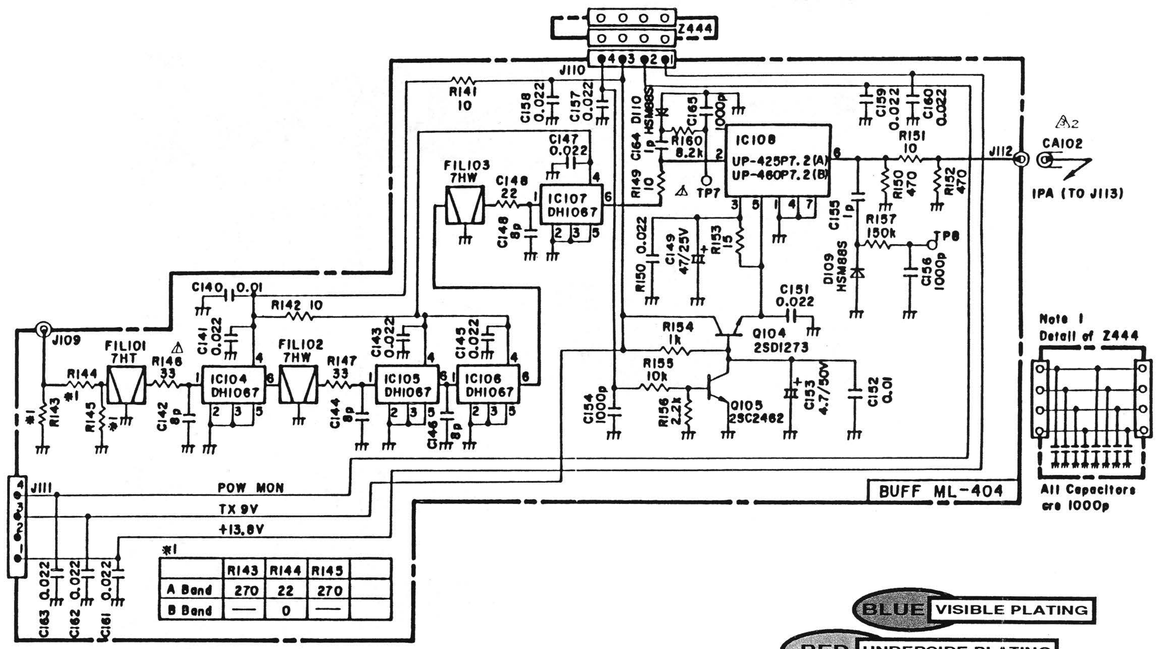

*1	R143	R144	R145
A Band	270	22	270
B Band	—	0	—

BLUE VISIBLE PLATING

RED UNDERSIDE PLATING

TOP VIEW

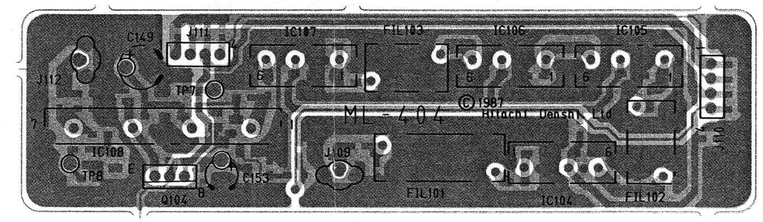

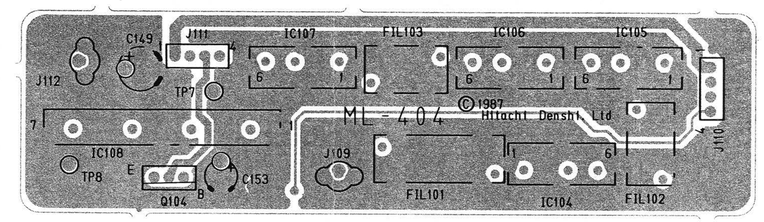

BOTTOM VIEW

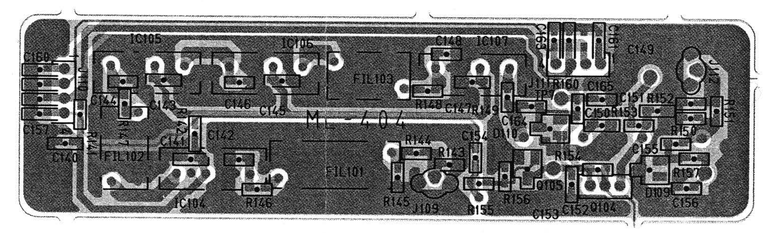

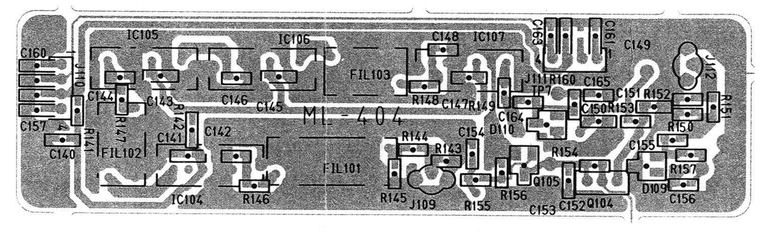

Z-515 LAYOUT

(CONNECTS TO OSCILLATOR BOARD)

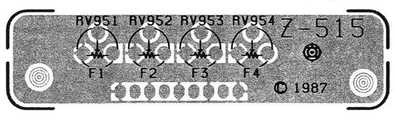

Z-444 LAYOUT

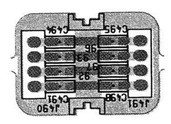

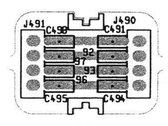

71-4050/71-4120

A B C D E F G H I J K L M

1 2 3 4 5 6 7 8

TOP VIEW

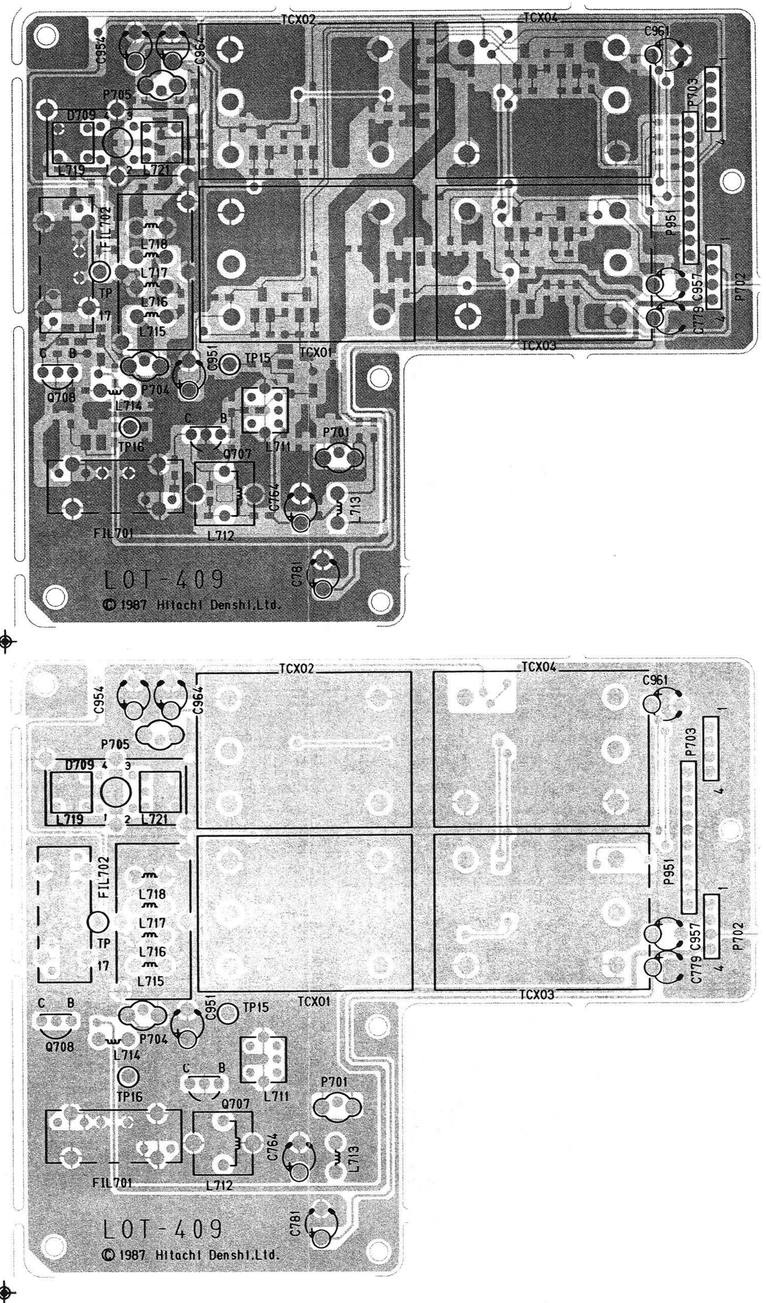

BOTTOM VIEW

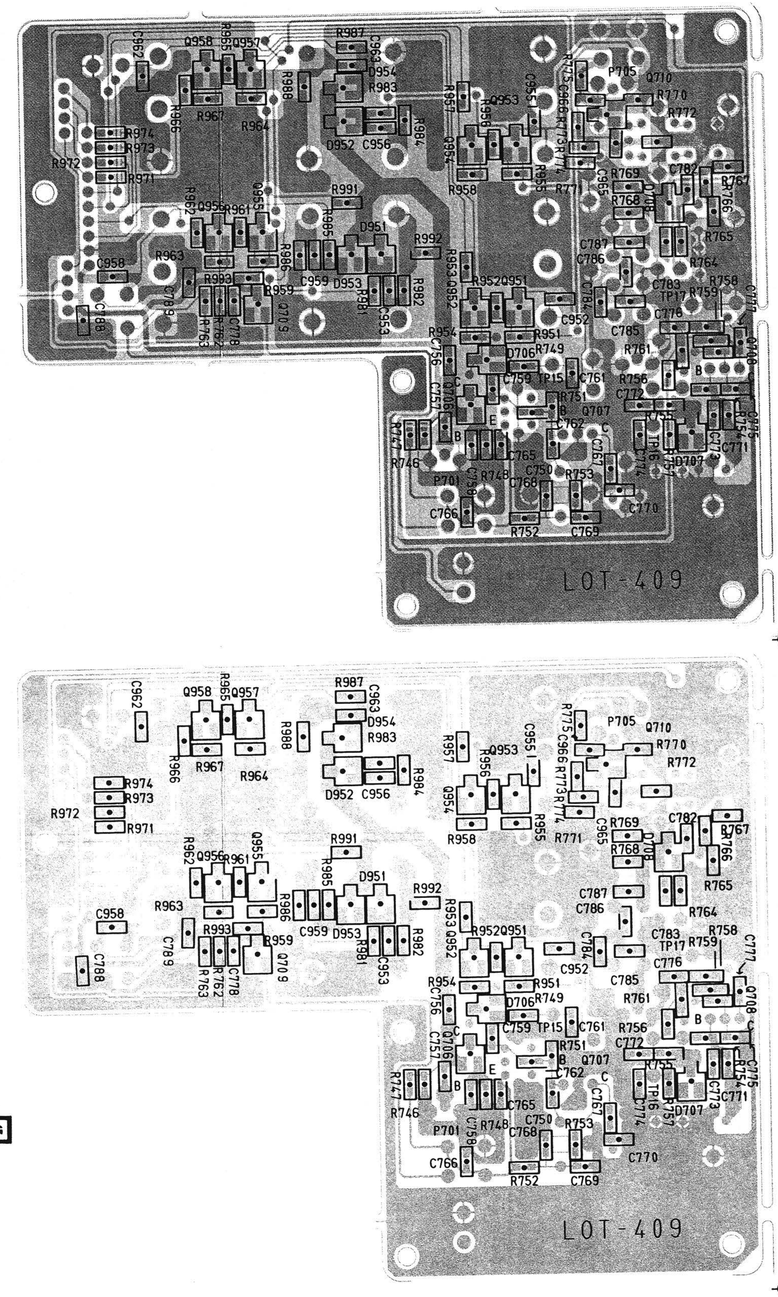

BLUE VISIBLE PLATING

RED UNDERSIDE PLATING

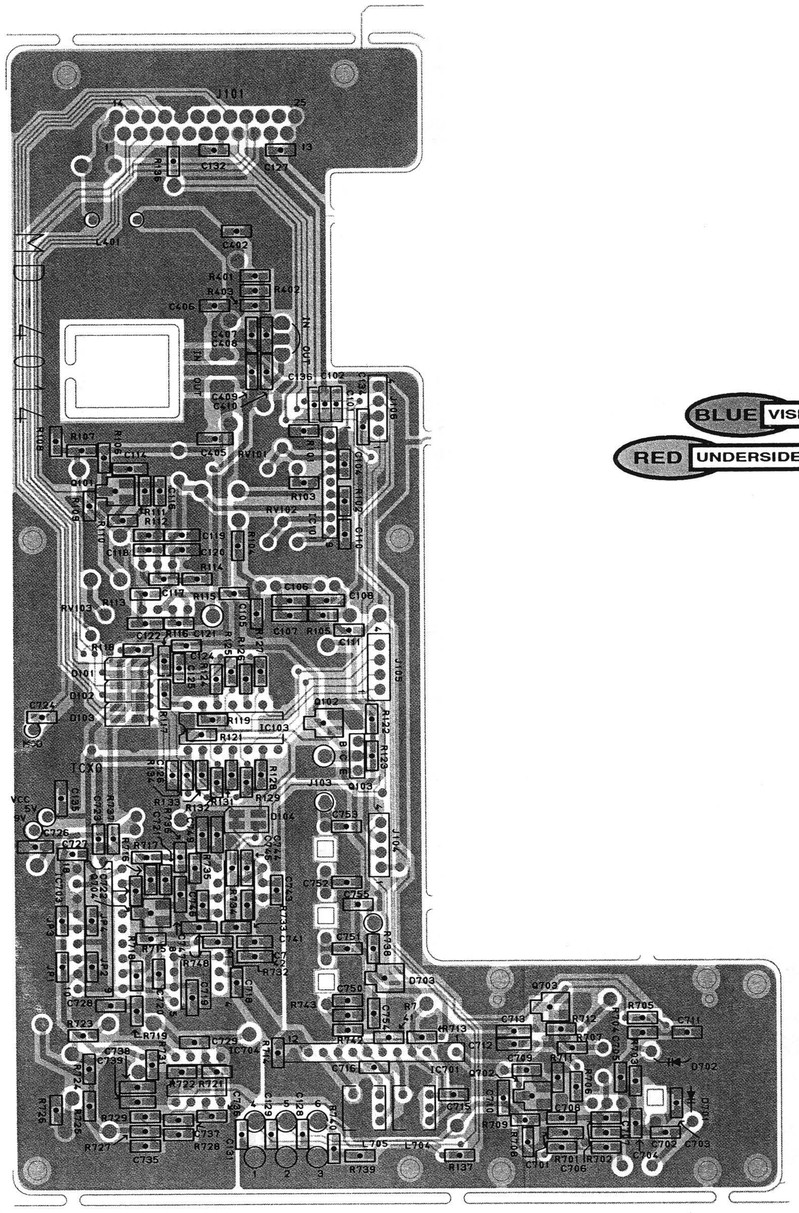

BLUE VISIBLE PLATING
RED UNDERSIDE PLATING

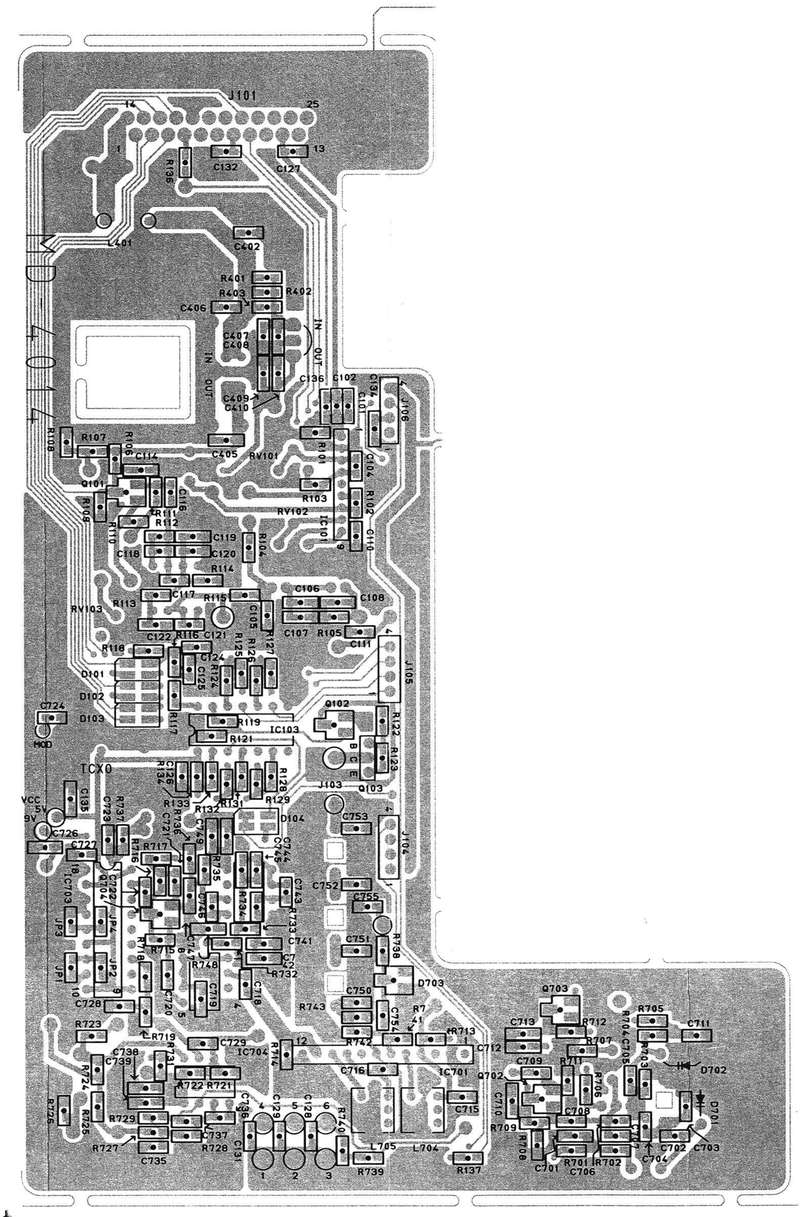

MD-4014 LAYOUT — TOP VIEW

71-4050/71-4120

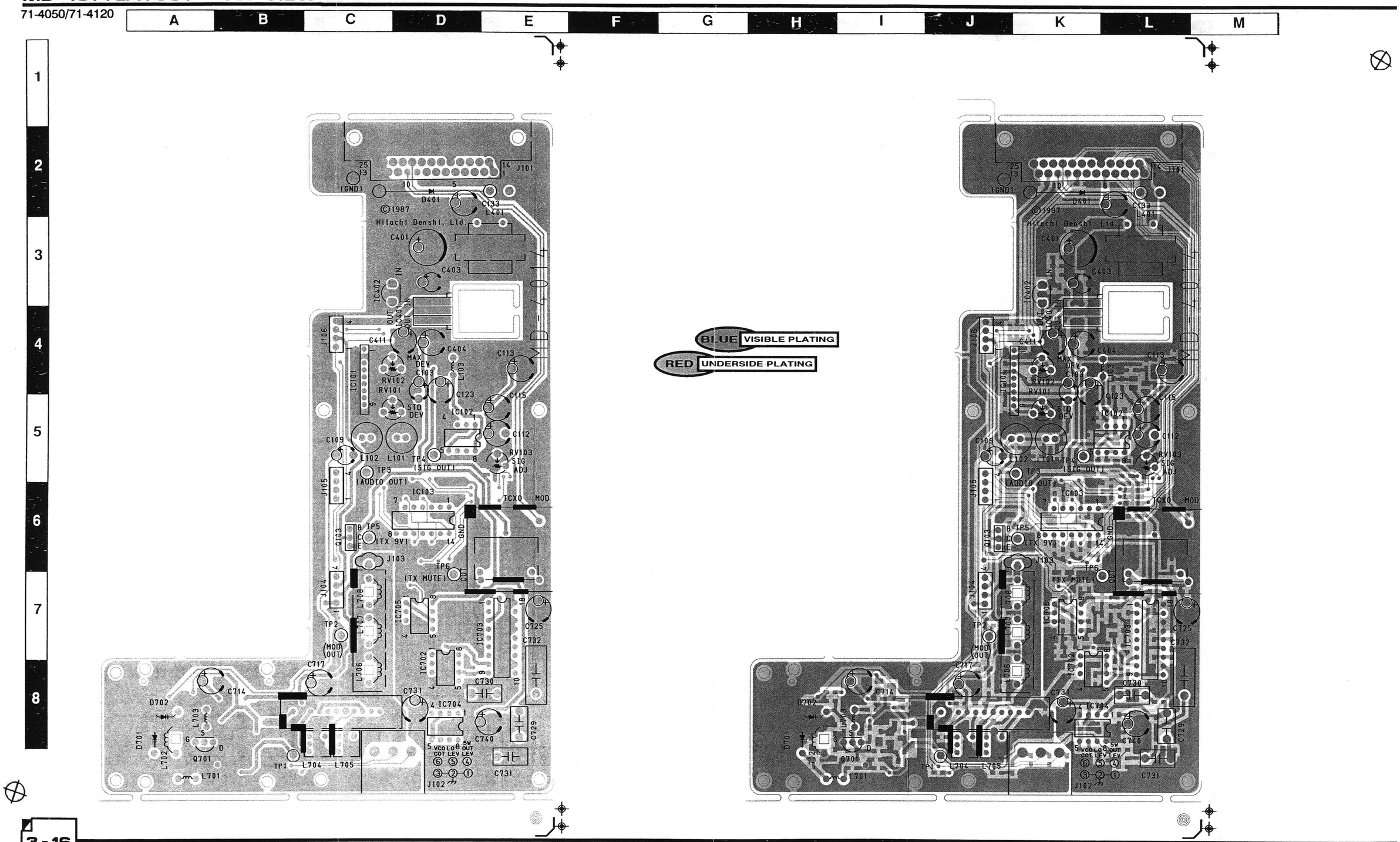

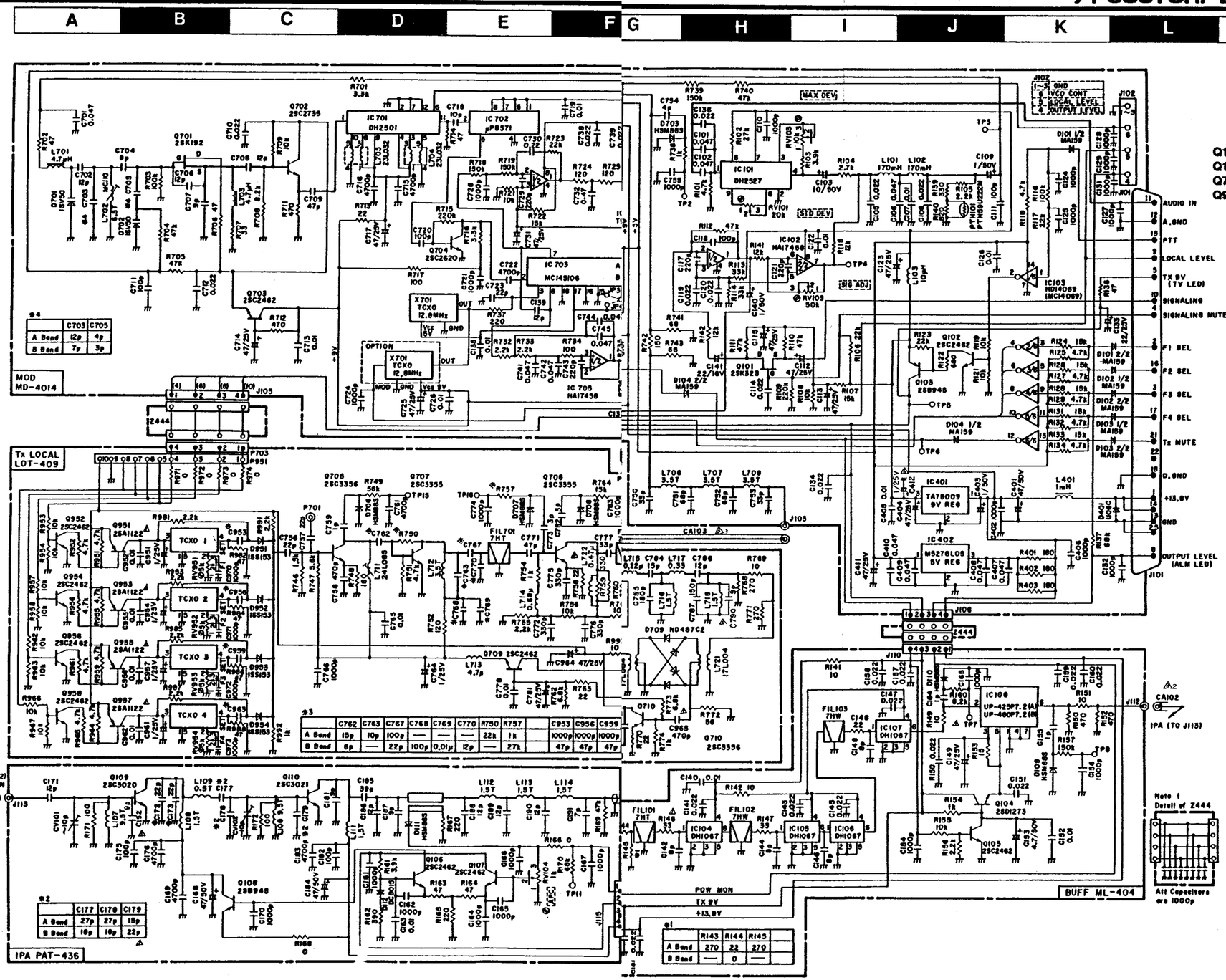
A B C D E F G H I J K L M
1 2 3 4 5 6 7 8
MOD MD-4014
Tx LOCAL LOT-409
IPA PAT-436
BUFF ML-404
IC 701 DH2501
IC 702 μPB571
IC 703 MC145106
IC 705 HA17456
IC 101 DH2527
IC 401 TA78009 9V REG
IC 402 M5278L05 9V REG
IC 106 UP-429P7.2(A) UP-460P7.2(B)
MAX DEV
STD DEV
SIG ADJ
AUDIO IN
A.GND
PTT
LOCAL LEVEL
TX 9V (TY LED)
SIGNALING
SIGNALING MUTE
F1 SEL
F2 SEL
F3 SEL
F4 SEL
Tx MUTE
D.GND
+13.8V
GND
OUTPUT LEVEL (ALM LED)
IPA (TO J113)
BUFF (TO J112) IN
POW MON
TX 9V
+13.8V
All Capacitors are 1000p

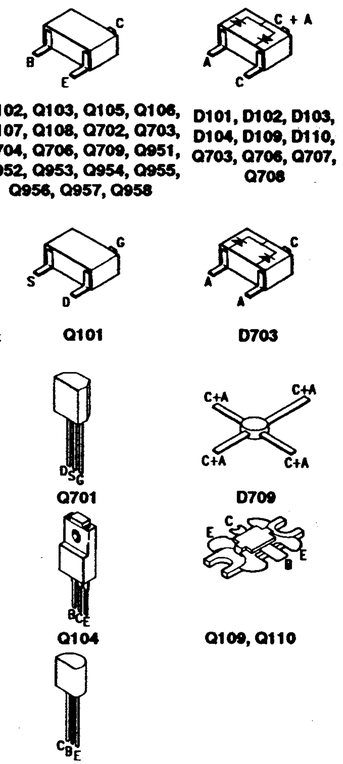
Q102, Q103, Q105, Q106, Q107, Q108, Q702, Q703, Q704, Q706, Q709, Q951, Q952, Q953, Q954, Q955, Q956, Q957, Q958
D101, D102, D103, D104, D109, D110, Q703, Q706, Q707, Q708
Q101
D703
Q701
D709
Q104
Q109, Q110
Q707

71-5051 EXPLODED VIEW

71-4050/71-4120

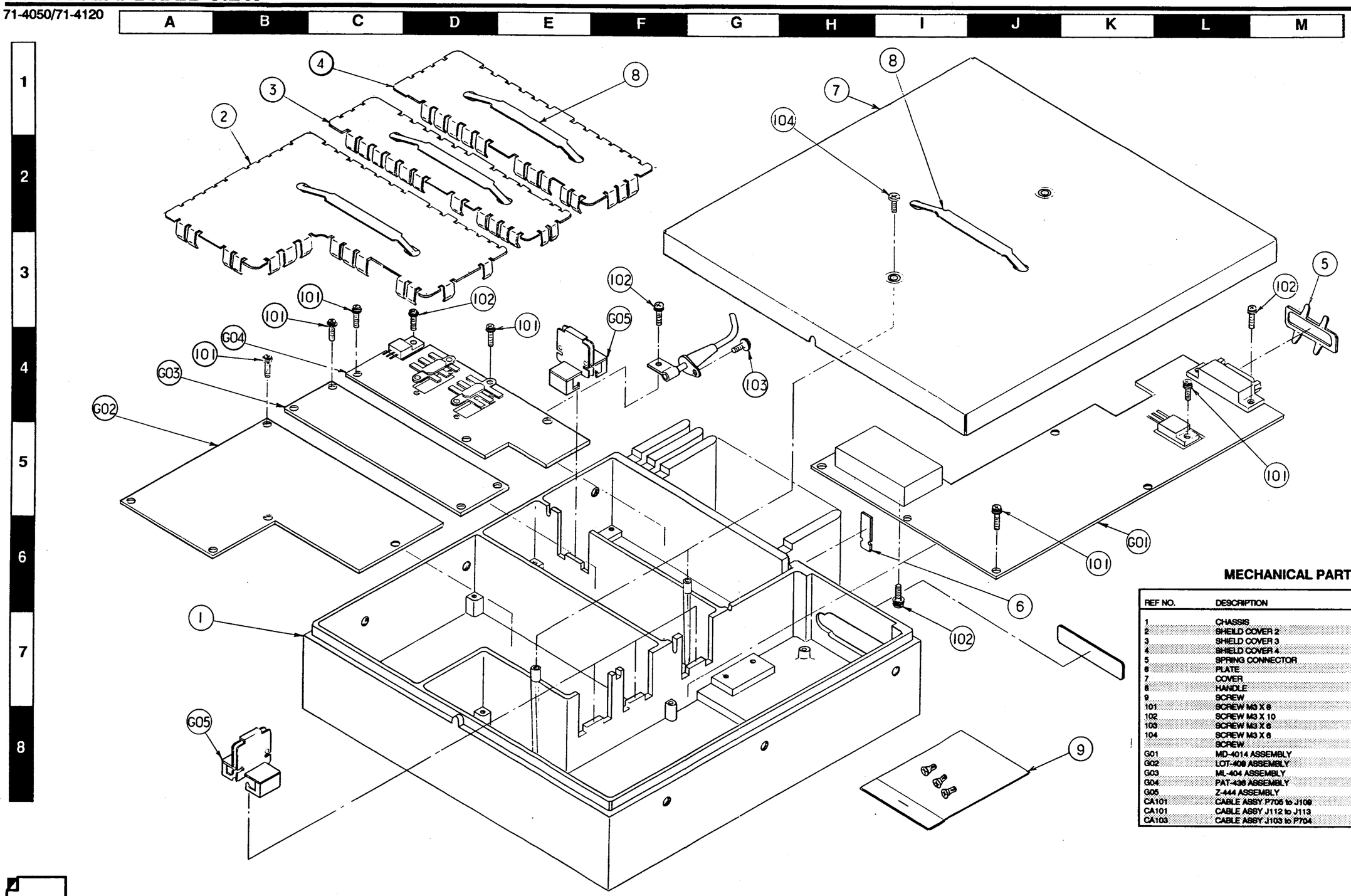

MECHANICAL PARTS

REF NO.	DESCRIPTION	PART NO.
1	CHASSIS	70-010167
2	SHIELD COVER 2	70-010168
3	SHIELD COVER 3	70-010169
4	SHIELD COVER 4	70-010170
5	SPRING CONNECTOR	70-152092
6	PLATE	70-020185
7	COVER	70-010171
8	HANDLE	70-011064
9	SCREW	70-151811
101	SCREW M3 X 8	70-151810
102	SCREW M3 X 10	70-151273
103	SCREW M3 X 6	70-151616
104	SCREW M3 X 6	70-151358
	SCREW	70-151812
G01	MD-4014 ASSEMBLY	70-075287
G02	LOT-408 ASSEMBLY	70-075288
G03	ML-404 ASSEMBLY	70-075289
G04	PAT-436 ASSEMBLY	70-075290
G05	Z-444 ASSEMBLY	70-075291
CA101	CABLE ASSY P706 to J109	70-034307
CA101	CABLE ASSY J112 to J113	70-034304
CA103	CABLE ASSY J103 to P704	70-034305

MD-4014 MODULATOR BOARD

A = A-Band T = Topside
B = B-Band U = Underside

REF. NO.	LOC	DESCRIPTION	PART NO.
MD-4014 A		ENTIRE ASSEMBLY	70-075267
MD-4014 B		ENTIRE ASSEMBLY	70-075341
		JACKS, PLUGS, CONNECTORS	
J101		JACKS, INTERFACE	70-159465
J102		JACK, MTRG	70-159465
J103		JACK, VCO OUT	70-159089
J104		PLUG INTERCONNECT	70-159401
J105		PLUG INTERCONNECT	70-159401
J106		PLUG INTERCONNECT	70-159401
		MISCELLANEOUS	
		VCO CASE	70-089207
		VCO COVER	70-089208
PTH101	T	PTH59U222M POSISTOR	70-086028
X701	T	12.800 MHz CRYSTAL	70-128055
		INTEGRATED CIRCUITS	
IC101	T	DH-2527	70-076447
IC102	T	HA7458PS	70-076448
IC103	T	HD1406UBP	70-076097
IC401	T	TA78009AP	70-076449
IC402	T	M5278L05	70-076450
IC701	T	DH2501	70-076140
IC702	T	UPB571C	70-076102
IC703	T	MC145106P	70-076451
IC704	T	T1082CP	70-076452
IC705	T	HA17458PS	70-076257
		TRANSISTORS	
Q101	U	2SK323C	70-080163
Q102	U	2SC2462LC	70-080160
Q103	T	2SB945Q	70-080214
Q701	U	2SK192A BL	70-080087
Q702	U	2SC2735JC	70-080282
Q703	U	2SC2462LC	70-080160
Q704	U	2SC2620QB	70-080161
		COILS AND INDUCTORS	
	T	CORE	70-090295
L101	T	FS1012S-174K INDUCTOR	70-178055
L102	T	FS1012S-174K INDUCTOR	70-178055
L103	T	ELE-V100KA INDUCTOR	70-178081
L401	T	1 mH COIL	70-178057
L701	T	ELE-505SKI-4R7M-2 INDUCTOR	70-178082
L702	T	MC115 COIL	70-090293
L702	T	MC115 COIL	70-090293
L704	T	TRANSFORMER	70-090141
L705	T	TRANSFORMER	70-090141
L706	T	MC115 COIL	70-090294
L707	T	MC115 COIL	70-090294
L708	T	MC115 COIL	70-090294
		CONTROLS	
RV101	T	CONTROL 20K	70-164092
RV102	T	CONTROL 10K	70-144045
RV103	T	CONTROL 10K	70-144045
		DIODES	
D101	T	MA159	70-085222
D102	T	MA159	70-085222
D103	T	MA159	70-085222
D104	T	MA159	70-085222
D401	T	U06C	70-085227
D701	T	1SV50	70-085044
D702	T	1SV50	70-085044
D703	T	HSM99S	70-085154

REF. NO.	LOC	DESCRIPTION	PART NO.
		ELECTROLYTIC CAPACITORS	
C103	T	10 µF, 50 V	70-135142
C109	T	1 µF, 50 V	70-135147
C112	T	47 µF, 25 V	70-135144
C113	T	47 µF, 25 V	70-135144
C115	T	47 µF, 25 V	70-135144
C123	T	47 µF, 25 V	70-135144
C133	T	22 µF, 50 V	70-135143
C401	T	47 µF, 50 V	70-135148
C403	T	1 µF, 50 V	70-135147
C404	T	47 µF, 25 V	70-135144
C411	T	47 µF, 25 V	70-135144
C714	T	47 µF, 25 V	70-135144
C717	T	47 µF, 25 V	70-135144
C725	T	47 µF, 25 V	70-135144
C731	T	47 µF, 25 V	70-135144
C740	T	47 µF, 25 V	70-135144
		PLASTIC CAPACITORS	
C730	U	0.22 µF, 50 V	70-136160
C732	U	0.47 µF, 50 V	70-137071
		CERAMIC CHIP CAPACITORS	
C101	U	0.047 µF, 50 V	70-131298
C102	U	0.047 µF, 50 V	70-131298
C105	U	22000 pF, 125 V	70-138162
C106	U	0.047 µF, 50 V	70-131298
C107	U	10000 pF, 50 V	70-138166
C108	U	22000 pF, 125 V	70-138162
C110	U	1000 pF, 50 V	70-138170
C111	U	100 pF, 50 V	70-138175
C114	U	22000 pF, 125 V	70-138162
C116	U	22000 pF, 125 V	70-138162
C117	U	220 pF, 50 V	70-138176
C118	U	100 pF, 50 V	70-138175
C119	U	22000 pF, 125 V	70-138162
C120	U	22000 pF, 125 V	70-138162
C121	U	220 pF, 50 V	70-138176
C122	U	10000 pF, 50 V	70-138166
C124	U	1000 pF, 50 V	70-138170
C125	U	1000 pF, 50 V	70-138170
C126	U	10000 pF, 50 V	70-138166
C127	U	1000 pF, 50 V	70-138170
C128	U	1000 pF, 50 V	70-138170
C129	U	1000 pF, 50 V	70-138170
C131	U	1000 pF, 50 V	70-138170
C132	U	1000 pF, 50 V	70-138170
C134	U	22000 pF, 125 V	70-138162
C135	U	10000 pF, 50 V	70-138166
C136	U	22000 pF, 125 V	70-138162
C137	U	0.047 µF, 50 V	70-131298
C139	U	12 pF, 50 V	70-138209
C402	U	1000 pF, 50 V	70-138170
C405	U	10000 pF, 50 V	70-138166
C406	U	1000 pF, 50 V	70-138170
C407	U	0.047 µF, 50 V	70-131298
C408	U	0.047 µF, 50 V	70-131298
C409	U	0.047 µF, 50 V	70-131298
C410	U	0.047 µF, 50 V	70-131298
C412	U	1 µF, 25 V	70-135369
C701	U	0.047 µF, 50 V	70-131298
C702	U	12 pF, 50 V	70-138209
C703	U	12 pF, 50 V	70-138209
C703 B	U	7 pF, 50 V	70-138181
C704	U	8 pF, 50 V	70-138203
C705	U	3 pF, 50 V	70-138164
C705 A	U	4 pF, 50 V	70-138179
C706	U	12 pF, 50 V	70-138209
C707	U	9 pF, 50 V	70-138186
C708	U	12 pF, 50 V	70-138209
C709	U	47 pF, 50 V	70-138185

MD-4014 MODULATOR BOARD (Continued)

REF. NO.	LOC	DESCRIPTION	PART NO.
		CERAMIC CHIP CAPACITORS (Continued)	
C710	U	22000 pF, 125 V	70-138162
C711	U	100 pF, 50 V	70-138175
C712	U	22000 pF, 125 V	70-138162
C713	U	10000 pF, 50 V	70-138168
C715	U	4700 pF, 50 V	70-138163
C716	U	4700 pF, 50 V	70-138163
C718	U	10 pF, 50 V	70-138187
C719	U	10000 pF, 50 V	70-138168
C720	U	100 pF, 50 V	70-138175
C721	U	1000 pF, 50 V	70-138170
C722	U	4700 pF, 50 V	70-138163
C723	U	22 pF, 50 V	70-138171
C724	U	1000 pF, 50 V	70-138170
C726	U	10000 pF, 50 V	70-138168
C727	U	10000 pF, 50 V	70-138168
C728	U	1000 pF, 50 V	70-138170
C729	U	220 pF, 50 V	70-138176
C735	U	10000 pF, 50 V	70-138168
C736	U	1000 pF, 50 V	70-138170
C736	U	220 pF, 50 V	70-138176
C737	U	2200 pF, 25 V	70-138195
C738	U	22000 pF, 125 V	70-138162
C739	U	22000 pF, 125 V	70-138162
C741	U	0.047 µF, 50 V	70-131298
C742	U	0.047 µF, 50 V	70-131298
C743	U	220 pF, 50 V	70-138176
C744	U	0.047 µF, 50 V	70-131298
C745	U	0.047 µF, 50 V	70-131298
C746	U	220 pF, 50 V	70-138176
C747	U	22000 pF, 125 V	70-138162
C748	U	22000 pF, 125 V	70-138162
C749	U	10000 pF, 50 V	70-138168
C750	U	33 pF, 50 V	70-138188
C751	U	68 pF, 50 V	70-138229
C752	U	68 pF, 50 V	70-138229
C753	U	33 pF, 50 V	70-138188
C754	U	4 pF, 50 V	70-138179
C755	U	1000 pF, 50 V	70-138170
C764	U	1 µF, 25 V	70-135369
C790	U	9 pF, 50 V	70-131181
		METAL RESISTORS	
R101	U	4.7 kΩ, 1/10 W	70-144123
R102	U	27 kΩ, 1/10 W	70-144163
R103	U	3.9 kΩ, 1/10 W	70-144132
R104	U	2.7 kΩ, 1/10 W	70-144159
R105	U	2.2 kΩ, 1/10 W	70-145113
R106	U	22 kΩ, 1/10 W	70-144121
R107	U	15 kΩ, 1/10 W	70-144122
R108	U	10 kΩ, 1/10 W	70-144120
R108	U	3.9 kΩ, 1/10 W	70-144132
R109	U	220 kΩ, 1/10 W	70-144131
R110	U	47 kΩ, 1/10 W	70-145145
R111	U	47 kΩ, 1/10 W	70-145145
R112	U	47 kΩ, 1/10 W	70-145145
R113	U	33 kΩ, 1/10 W	70-144112
R114	U	33 kΩ, 1/10 W	70-144112
R115	U	12 kΩ, 1/10 W	70-144111
R116	U	100 kΩ, 1/10 W	70-144128
R117	U	22 kΩ, 1/10 W	70-144121
R118	U	4.7 kΩ, 1/10 W	70-144123

REF. NO.	LOC	DESCRIPTION	PART NO.
		METAL RESISTORS (Continued)	
R119	U	10 kΩ, 1/10 W	70-144120
R121	U	10 kΩ, 1/10 W	70-144120
R122	U	4.7 kΩ, 1/10 W	70-144123
R123	U	22 kΩ, 1/10 W	70-144121
R124	U	15 kΩ, 1/10 W	70-144122
R125	U	4.7 kΩ, 1/10 W	70-144123
R126	U	15 kΩ, 1/10 W	70-144122
R127	U	4.7 kΩ, 1/10 W	70-144123
R128	U	15 kΩ, 1/10 W	70-144122
R129	U	4.7 kΩ, 1/10 W	70-144123
R131	U	15 kΩ, 1/10 W	70-144122
R132	U	4.7 kΩ, 1/10 W	70-144123
R133	U	15 kΩ, 1/10 W	70-144122
R134	U	4.7 kΩ, 1/10 W	70-144123
R136	U	47 Ω, 1/10 W	70-145130
R137	U	68 kΩ, 1/10 W	70-144119
R138	U	2.2 kΩ, 1/10 W	70-145113
R139	U	330 Ω, 1/10 W	70-144164
R140	U	820 Ω, 1/10 W	70-144165
R401	U	180 Ω, 1/10 W	70-144153
R402	U	180 Ω, 1/10 W	70-144153
R403	U	180 Ω, 1/10 W	70-144153
R702	U	47 Ω, 1/10 W	70-145130
R703	U	100 kΩ, 1/10 W	70-144128
R704	U	47 kΩ, 1/10 W	70-145145
R705	U	47 kΩ, 1/10 W	70-145145
R706	U	47 Ω, 1/10 W	70-145130
R707	U	33 Ω, 1/10 W	70-140320
R708	U	8.2 kΩ, 1/10 W	70-140306
R709	U	10 kΩ, 1/10 W	70-144120
R711	U	470 Ω, 1/10 W	70-144156
R712	U	470 Ω, 1/10 W	70-144156
R713	U	22 Ω, 1/10 W	70-144160
R714	U	47 Ω, 1/10 W	70-145130
R715	U	220 kΩ, 1/10 W	70-144131
R716	U	3.3 kΩ, 1/10 W	70-144118
R717	U	100 Ω, 1/10 W	70-145146
R718	U	150 kΩ, 1/10 W	70-144129
R719	U	150 kΩ, 1/10 W	70-144129
R721	U	10 kΩ, 1/10 W	70-144120
R722	U	15 kΩ, 1/10 W	70-144122
R723	U	22 kΩ, 1/10 W	70-144121
R724	U	120 Ω, 1/10 W	70-144166
R725	U	120 Ω, 1/10 W	70-144166
R727	U	1.2 kΩ, 1/10 W	70-144167
R729	U	3.3 kΩ, 1/10 W	70-144118
R731	U	10 Ω, 1/10 W	70-144115
R732	U	2.2 kΩ, 1/10 W	70-145113
R733	U	2.2 kΩ, 1/10 W	70-145113
R734	U	100 Ω, 1/10 W	70-145146
R735	U	12 kΩ, 1/10 W	70-144111
R736	U	10 kΩ, 1/10 W	70-144120
R737	U	220 Ω, 1/10 W	70-145131
R738	U	1 kΩ, 1/10 W	70-144125
R739/10 W	U	150 kΩ, 1/10 W	70-144129
R740	U	47 kΩ, 1/10 W	70-145145
R741	U	68 Ω, 1/10 W	70-144114
R742	U	150 Ω, 1/10 W	70-140321
R743	U	68 Ω, 1/10 W	70-144114
JP1 A	U	0 Ω	70-144106
JP2 B	U	0 Ω	70-144106

LOT-409 OSCILLATOR BOARD

A = A-Band T = Topside
B = B-Band U = Underside

REF. NO.	LOC	DESCRIPTION	PART NO.
LOT-409 A		ENTIRE ASSEMBLY	70-075288
LOT-409 B		ENTIRE ASSEMBLY	70-075342
		TRANSISTORS	
Q706	U	2SC3356	70-080275
Q707	T	2SC3355	70-080280
Q708	T	2SC3355	70-080280
Q709	U	2SC2462	70-080160
Q951	U	2SA1122CC	70-080162
Q952	U	2SC2462	70-080160
Q953	U	2SA1122CC	70-080162
Q954	U	2SC2462	70-080160
Q955	U	2SA1122CC	70-080162
Q956	U	2SC2462LC	70-080160
Q957	U	2SS1122CC	70-080162
Q958	U	2SC2462LC	70-080160
		CONTROLS	
RV951	T	FREQUENCY ADJUST 5K	70-164086
RV952	T	FREQUENCY ADJUST 5K	70-164086
RV953	T	FREQUENCY ADJUST 5K	70-164086
RV954	T	FREQUENCY ADJUST 5K	70-164086
		COILS AND INDUCTORS	
L711	T	TRANSFORMER 24L085	70-090296
L712	T	CASE SHIELD	70-090187
L712	T	MC115 COIL 3.5T	70-090294
L713	T	ELE-V-4R7 KA INDUCTOR	70-178083
L714	T	ELE-V R68MA INDUCTOR	70-178080
L715	T	ELE-V R22 MA INDUCTOR	70-178084
L716	T	Z0.8C3D 1.5T COIL	70-090155
L717	T	ELE-V R33MA INDUCTOR	70-178085
L718	T	Z0.8C3D 1.5T COIL	70-090155
L719	T	17L004 TRANSFORMER	70-090114
L721	T	17L004 TRANSFORMER	70-090114
L722	T	ELE-V 0.47µH INDUCTOR	70-080200
		FILTERS	
FIL701 A	T	7HT-337.8 MHz	70-179065
FIL701 B	T	7HT-371.8 MHz	70-179066
FIL702 A	T	7HT-337.8 MHz	70-179065
FIL702 B	T	7HT-371.8 MHz	70-179066
		JACKS, PLUGS AND CONNECTORS	
P701	T	COAX CONNECTOR	70-159089
P702	T	PLUG, PCB INTERCONNECT	70-159401
P703	T	PLUG, PCB INTERCONNECT	70-159401
P704	T	COAX CONNECTOR, TX LCL OUT	70-159089
P705	T	COAX CONNECTOR, TX LCL OUT	70-159089
	T	SOCKET	70-159405
		ALUMINUM SOLID CAPACITORS	
C764	T	1 µF, 25 V	70-135148
C951	T	1 µF, 25 V	70-135148
C954	T	1 µF, 25 V	70-135148
C957	T	1 µF, 25 V	70-135148
C970	U	1000 pF, 50 V	70-138170
C971	U	1000 pF, 50 V	70-138170
C972	U	1000 pF, 50 V	70-138170
C973	U	1000 pF, 50 V	70-138170
		ALUMINUM ELECTROLYTIC CAPACITORS	
C781	T	47 µF, 25 V	70-135144
C964	T	47 µF, 25 V	70-135144
		DIODES	
D706	U	HSM88S	70-085154
D707	U	HSM88S	70-085154
		DIODES (CONTINUED)	
D708	U	HSM88S	70-085154
D709	U	ND487C2-3R	70-085229
D951	U	1SS153	70-085102
D952	U	1SS153	70-085102
D953	U	1SS153	70-085102
D954	U	1SS153	70-085102
		CERAMIC CHIP CAPACITORS	
C756	U	22 pF, 50 V	70-138171
C757	U	22 pF, 50 V	70-138171
C758	U	470 pF, 50 V	70-138195
C759	U	1 pF, 50 V	70-138174
C761	U	4700 pF, 50 V	70-138163
C762 A	U	15 pF, 50 V	70-138205
C762 B	U	8 pF, 50 V	70-138210
C763	U	10 pF, 50 V	70-138187
C765	U	10000 pF, 50 V	70-138168
C765	U	470 pF, 50 V	70-138195
C766	U	1000 pF, 50 V	70-138170
C766	U	470 pF, 50 V	70-138195
C767 A	U	100 pF, 50 V	70-138175
C767 B	U	22 pF, 50 V	70-138171
C768 B	U	100 pF, 50 V	70-138175
C769 B	U	10000 pF, 50 V	70-138168
C770 B	U	12 pF, 50 V	70-138209
C771	U	47 pF, 50 V	70-138185
C772	U	330 pF, 50 V	70-138228
C773	U	3 pF, 50 V	70-138164
C774	U	1000 pF, 50 V	70-138170
C775	U	330 pF, 50 V	70-138228
C776	U	330 pF, 50 V	70-138228
C777	U	33 pF, 50 V	70-138188
C778	U	10000 pF, 50 V	70-138168
C779	U	10000 pF, 50 V	70-138168
C782	U	3 pF, 50 V	70-138164
C783	U	1000 pF, 50 V	70-138170
C784	U	15 pF, 50 V	70-138205
C785	U	180 pF, 50 V	70-138230
C786	U	12 pF, 50 V	70-138209
C787	U	150 pF, 50 V	70-138231
C788	U	22000 pF, 25 V	70-138162
C789	U	22000 pF, 25 V	70-138162
C952	U	10000 pF, 50 V	70-138168
C953	U	47 pF, 50 V	70-138185
C955	U	10000 pF, 50 V	70-138168
C956	U	47 pF, 50 V	70-138185
C958	U	10000 pF, 50 V	70-138168
C959	U	47 pF, 50 V	70-138185
C962	U	10000 pF, 50 V	70-138168
C963	U	47 pF, 50 V	70-138185
C967	U	1000 pF, 50 V	70-138170
C968	U	1000 pF, 50 V	70-138170
		METAL CHIP RESISTORS	
R746	U	1.5 kΩ, 1/10 W	70-144134
R747	U	5.6 kΩ, 1/10 W	70-144168
R748	U	180 Ω, 1/10 W	70-144153
R749	U	56 kΩ, 1/10 W	70-144166
R750 A	U	22 kΩ, 1/10 W	70-144121
R751	U	4.7 kΩ, 1/10 W	70-144123
R752	U	120 Ω, 1/10 W	70-144166
R754	U	1 kΩ, 1/10 W	70-144113
R755	U	2.2 kΩ, 1/10 W	70-144128
R756	U	10 kΩ, 1/10 W	70-144120
R757	U	27 kΩ, 1/10 W	70-144163
R757 A	U	1 kΩ, 1/10 W	70-144125
R758	U	22 Ω, 1/10 W	70-144170
R759	U	330 Ω, 1/8 W	70-144065
R760	U	330 Ω, 1/8 W	70-144065
R761	U	220 Ω, 1/8 W	70-144074
R762	U	6.8 kΩ, 1/8 W	70-144158
R763	U	22 Ω, 1/10 W	70-144170
R764	U	15 kΩ, 1/10 W	70-144122

LOT-409 OSCILLATOR BOARD

REF. NO.	LOC	DESCRIPTION	PART NO.
		METAL RESISTORS (Continued)	
R765	U	270 Ω, 1/10 W	70-144116
R766	U	18 Ω, 1/10 W	70-144171
R767	U	270 Ω, 1/10 W	70-144116
R768	U	270 Ω, 1/10 W	70-144116
R769	U	18 Ω, 1/10 W	70-144171
R771	U	270 Ω, 1/10 W	70-144116
R772	U	56 Ω, 1/10 W	70-145142
R773	U	6.8 kΩ, 1/8 W	70-144156
R774	U	1 kΩ, 1/10 W	70-144113
R775	U	47 Ω, 1/10 W	70-145130
R951	U	4.7 kΩ, 1/10 W	70-144123
R952	U	4.7 kΩ, 1/10 W	70-144123
R953	U	10 kΩ, 1/10 W	70-144120
R954	U	10 kΩ, 1/10 W	70-144120
R955	U	4.7 kΩ, 1/10 W	70-144123
R956	U	4.7 kΩ, 1/10 W	70-144123
R957	U	10 kΩ, 1/10 W	70-144120
R958	U	10 kΩ, 1/10 W	70-144120
R959	U	4.7 kΩ, 1/10 W	70-144123
R961	U	4.7 kΩ, 1/10 W	70-144123

REF. NO.	LOC	DESCRIPTION	PART NO.
		METAL RESISTORS (Continued)	
R963	U	10 kΩ, 1/10 W	70-144120
R964	U	4.7 kΩ, 1/10 W	70-144123
R965	U	4.7 kΩ, 1/10 W	70-144123
R966	U	10 kΩ, 1/10 W	70-144120
R967	U	10 kΩ, 1/10 W	70-144120
R972	U	0 Ω, 1/10 W	70-144106
R973	U	0 Ω, 1/10 W	70-144106
R974	U	0 Ω, 1/10 W	70-144106
R981	U	2.2 kΩ, 1/10 W	70-144128
R982	U	47 Ω, 1/10 W	70-145130
R983	U	2.2 kΩ, 1/10 W	70-144128
R984	U	47 Ω, 1/10 W	70-145130
R985	U	2.2 kΩ, 1/10 W	70-144128
R986	U	47 Ω, 1/10 W	70-145130
R987	U	2.2 kΩ, 1/10 W	70-144128
R988	U	47 Ω, 1/10 W	70-145130
R991	U	2.2 kΩ, 1/10 W	70-144128
R992	U	1 kΩ, 1/10 W	70-144113
R993	U	10 Ω, 1/10 W	70-144115
R962	U	10 kΩ, 1/10 W	70-144120

ML-404 MODULATOR BOARD

A = A-Band T = Topside
B = B-Band U = Underside

REF. NO.	LOC	DESCRIPTION	PART NO.
ML-404 A		ENTIRE ASSEMBLY	70-075289
ML-404 B		ENTIRE ASSEMBLY	70-075343
		INTEGRATED CIRCUITS	
IC104	T	DH1067B	70-076444
IC105	T	DH1067B	70-076444
IC106	T	DH1067B	70-076444
IC107	T	DH1067B	70-076444
IC108 A	T	UP425P7.2A	70-076445
IC108 B	T	UP460P7.2A	70-076446
		TRANSISTORS	
Q104	T	2SD1273Q	70-080213
Q105	U	2SC2462LC	70-080160
		FILTERS	
FIL101 A	T	7HT-418 MHz	70-179063
FIL101 B	T	7HT-46 MHz	70-179064
		HELICAL CAVITY	
FIL102 A	T	7HW-1A	70-090256
FIL102 B	T	7HW-1B	70-090253
FIL103 A	T	7HW-1A	70-090256
FIL103 B	T	7HW-1B	70-090253
		JACKS	
J109	T	JACK TX-L.O.	70-159089
J110	T	PLUG, PCB INTERCONNECT	70-159406
J111	T	PLUG, PCB INTERCONNECT	70-159406
J112	T	JACK RF PA IN	70-159089
		ELECTROLYTIC CAPACITORS	
C149	T	47 µF, 25 V	70-135144
C153	T	4.7 µF, 50 V	70-135145
		DIODES	
D109	U	HSM88S	70-085226
D110	U	HSM88S	70-085226

REF. NO.	LOC	DESCRIPTION	PART NO.
		CERAMIC CAPACITORS	
C140	U	10000 pF, 50 V	70-138168
C141	U	22000 pF, 25 V	70-138162
C142	U	8 pF, 50 V	70-138203
C143	U	22000 pF, 25 V	70-138162
C144	U	8 pF, 50 V	70-138203
C145	U	22000 pF, 25 V	70-138162
C146	U	8 pF, 50 V	70-138203
C147	U	22000 pF, 25 V	70-138162
C148	U	22000 pF, 25 V	70-138162
C150	U	22000 pF, 25 V	70-138162
C151	U	22000 pF, 25 V	70-138162
C152	U	10000 pF, 50 V	70-138168
C154	U	1000 pF, 50 V	70-138170
C155	U	1 pF, 50 V	70-138174
C156	U	1000 pF, 50 V	70-138170
C157	U	22000 pF, 25 V	70-138162
C158	U	22000 pF, 25 V	70-138162
C159	U	22000 pF, 25 V	70-138162
C160	U	22000 pF, 25 V	70-138162
C161	U	22000 pF, 25 V	70-138162
C162	U	22000 pF, 25 V	70-138162
C163	U	22000 pF, 25 V	70-138162
C164	U	3 pF, 50 V	70-138164
C165	U	1000 pF, 50 V	70-138170
		RESISTORS	
R141	U	10 Ω, 1/10 W	70-144115
R142	U	10 Ω, 1/10 W	70-144115
R143 A	U	270 Ω, 1/10 W	70-144116
R144 A	U	22 Ω, 1/10 W	70-144160
R144 B	U	0 Ω, 1/10 W	70-144106
R145 A	U	270 Ω, 1/10 W	70-144116
R146	U	33 Ω, 1/10 W	70-140320
R147	U	33 Ω, 1/10 W	70-140320
R148	U	22 Ω, 1/10 W	70-144160
R149	U	10 Ω, 1/10 W	70-144115
R150	U	470 Ω, 1/10 W	70-144152
R151	U	10 Ω, 1/10 W	70-144115
R152	U	470 Ω, 1/10 W	70-144152
R153	U	15 Ω, 1/10 W	70-144162
R154	U	1 Ω, 1/10 W	70-144128
R155	U	10 Ω, 1/10 W	70-144120
R156	U	2.2 Ω, 1/10 W	70-144113
R157	U	150 Ω, 1/10 W	70-144129
R160	U	8.2 Ω, 1/10 W	70-140305

PAT-436 RF OUTPUT BOARD

A = A-Band T = Topside
B = B-Band U = Underside

REF. NO.	LOC	DESCRIPTION	PART NO.
PAT-436 A		ENTIRE ASSEMBLY	70-075290
PAT-436 B		ENTIRE ASSEMBLY	70-075344
		TRANSISTORS	
Q106	U	2SC2462LC	70-080160
Q107	U	2SC2462LC	70-080160
Q108	T	2SB945Q	70-080214
Q109	T	2SC3020	70-080283
Q110	T	2SC3021	70-080141
		COILS	
L107	T	Z0.8C5D9.5T	70-090298
L108	T	Z0.8C3D1.5T	70-090155
L109	T	Z0.8C3D0.5T	70-090164
L110	T	Z0.8C5D9.5T	70-090298
L111	T	Z0.8C3D1.5T	70-090155
L112	T	Z0.8C3D1.5T	70-090155
L113	T	Z0.8C3D1.5T	70-090155
L114	T	Z0.8C3D1.5T	70-090155
		TRIMMER CAPACITORS	
CV101	T	TZ03T110E	70-123040
CV102	T	TZ03T110E	70-123040
		JACKS AND PLUGS	
J113	T	JACK, RF INPUT	70-159089
J114	T	CABLE ASSEMBLY RF	70-034306
J115	T	PLUG PCB	70-159406
		ELECTROLYTIC CAPACITORS	
C168	T	47 µF, 50 V	70-135146
C184	T	47 µF, 50 V	70-135146
		CERAMIC CAPACITORS	
C161	U	1000 pF, 50 V	70-138170
C162	U	1000 pF, 50 V	70-138170
C163	U	1000 pF, 50 V	70-138170
C164	U	1000 pF, 50 V	70-138170
C165	U	1000 pF, 50 V	70-138170
C166	U	1000 pF, 50 V	70-138170
		CERAMIC CHIP CAPACITORS (Continued)	
C167	U	1000 pF, 50 V	70-138170
C169	U	4700 pF, 50 V	70-138163
C170	U	1000 pF, 50 V	70-138170
C171	U	12 pF, 50 V	70-138209
C172	T	22 pF, 50 V	70-131188
C173	T	22 pF, 50 V	70-131188
C175	U	100 pF, 50 V	70-138175
C176	U	4700 pF, 50 V	70-138163
C177 A	U	27 pF, 50 V	70-138185
C177 B	U	18 pF, 50 V	70-138206
C178 A	U	27 pF, 50 V	70-138185
C178 B	U	18 pF, 50 V	70-138206
C179 A	T	15 pF, 50 V	70-131185
C179 B	T	22 pF, 50 V	70-131188
C181	U	9 pF, 50 V	70-138181
C182	U	100 pF, 50 V	70-138175
C183	U	4700 pF, 50 V	70-138163
C185	U	39 pF, 50 V	70-131194
C186	U	12 pF, 50 V	70-131183
C187	U	9 pF, 50 V	70-138181
C188	U	12 pF, 50 V	70-138209
C189	U	12 pF, 50 V	70-138209
C190	U	12 pF, 50 V	70-138209
C191	U	7 pF, 50 V	70-138181
C192	U	9 pF, 50 V	70-131181
		CONTROLS	
RV104	U	POWER OUTPUT 1K	70-144044
		METAL CHIP RESISTORS	
R161	U	3.9 kΩ, 1/10 W	70-145132
R162	U	390 Ω, 1/10 W	70-144161
R163	U	47 Ω, 1/10 W	70-145130
R164	U	47 Ω, 1/10 W	70-145130
R165	U	220 Ω, 1/10 W	70-145131
R166	U	0 Ω, 1/10 W	70-144108
R167	U	220 Ω, 1/10 W	70-145131
R168	U	0 Ω, 1/10 W	70-144108
R169	U	47 kΩ, 1/10 W	70-145146
R170	U	68 kΩ, 1/10 W	70-144119
R171	U	100 Ω, 1/10 W	70-145148
R172	U	100 Ω, 1/10 W	70-145148

Z-444 CONNECTOR BOARD

T = Topside

REF. NO.	LOC	DESCRIPTION	PART NO.
Z-444		ENTIRE ASSEMBLY	70-075291
		JACKS AND CONNECTORS	
J490	T	PCB INTERCONNECT	70-159404
J491	T	PCB INTERCONNECT	70-159404
		MISCELLANEOUS	
	T	GROUND SPRING	70-152091
		CERAMIC CAPACITORS	
C491	T	1000 pF, 50 V	7-0138170
C492	T	1000 pF, 50 V	7-0138170
C493	T	1000 pF, 50 V	7-0138170
C494	T	1000 pF, 50 V	7-0138170
C495	T	1000 pF, 50 V	7-0138170
C496	T	1000 pF, 50 V	7-0138170
C497	T	1000 pF, 50 V	7-0138170
C498	T	1000 pF, 50 V	7-0138170

NOTES

SECTION 4

71-5052 RECEIVER

NOTES

71-5052 CIRCUIT DESCRIPTION

The 71-5052 UHF Receiver contains four modules: the RF Amplifier, the First Mixer, the Local Oscillator, and the Demodulator that also contains second I.F., squelch, and audio circuitry. The modules are contained in a single chassis.

RF AMPLIFIER MODULE (RF-4012)

Helical resonators L201 and L202 couple a 2-MHz segment of wide band RF signal and noise from the antenna to RF amplifier Q201. Amplified signal and noise is then applied from the 50-ohm output of Q201 to the MXR-401 Module through coax cable.

MIXER MODULE (MXR-451)

The 2-MHz segment of RF signal and noise from the RF-4012 Module is tuned sharper by helical resonators L211-L214. Image frequency rejection is provided primarily by these resonators, plus L201 and L202. Q211 provides additional RF stage gain to overcome losses and double-balanced hybrid mixer IC211 mixes this RF signal and noise segment with injection signal from the LOR-408 Module. IC211 output is a copy of the 2-MHz input segment of which 21.4 MHz is within. Q213 amplifies mixer output and drives the 21.4-MHz I.F. signal into the 50-ohm coax jumper to the DM-201 Modulator.

The 2-MHz wide, 21.4 MHz signal and noise segment from the mixer contains all signals (they are down-converted) within the 2-MHz wide mixer input, including the received carrier which appears at exactly 21.4 MHz.

DEMODULATOR MODULE (DM-201)

First I.F. crystal filter FIL251 extracts a 15 kHz segment of signal that is centered around 21.4 MHz, from the MXR-401 Module output. L251 and and L252 match FIL251 to 50-ohm-J251 and Q251, respectively. Q251 and Q252 amplify the first I.F. signal. L257 and L258 match crystal filter FIL254 that sharpens the rolloff around the 15 kHz signal and noise segment. The resulting signal is mostly the desired carrier, its modulation, and in-channel noise.

IC251 contains second I.F., demodulator, and squelch circuits. The first-I.F signal and noise is applied to the double balanced second mixer within IC251. The second local oscillator, which is stabilized by 20.945 MHz crystal X251, applies second injection to the other mixer input. Second mixer output, which is carrier, modulation, and in-channel noise that has been down-converted to 455 kHz 7.5 kHz, is routed through the ceramic second I.F. filter FL252.

FL252 output is only desired carrier, its modulation, and in-channel noise (if any). This signal is amplified by a very high gain amplifier within IC251 until the noise floor of the signal is nearly at the clipping limit of the amplifier output. Limiter output then drives the quadrature demodulator which consists of a balanced mixer within IC251 and 455-kHz tank L253. Demodulated frequency modulation routes out pin 9 and back into pin 10 where it is pre-amplified within IC251. Pre-amplifier output, which is received modulation plus channel noise ranging from audio frequencies to 455 kHz, appears at pin 9. The audio portion of demodulation is buffered by Q253, de-emphasized by Q254, controlled by audio gate Q861, buffered by Q862, then routed to the Control Panel. Demodulation without de-emphasis is routed from Q253 to the Control Panel via the DISC line.

After attenuation by the Volume control in the Control Panel, receive audio is routed to buffer Q863. AFSET RV861 calibrates maximum volume and audio power amplifier IC861 drives the internal speaker in the Control Panel.

SQSET RV251 attenuates the high frequency portion of demodulation for tight squelch calibration. L255 and L256 tanks extract all signals from RV251 except the 60 kHz component of demodulation. This signal represents the noise floor of the received channel and varies inversely with carrier power. The 60 kHz noise component is then amplified by IC252 and converted to DC voltage by detector D251. The Squelch control on the Control Panel varies the ground termination to the of the detector to provide adjustment of threshold squelch. The DC voltage is then applied to a trigger with hysteresis at IC251 pin 12. When pin 12 drops below 0.7 Volts, trigger output pin 13 is pulled high. Another output of the trigger, at pin 14, releases ground simultaneously.

When the receiver is muted, audio gate Q861 is turned off by gate-grounding through Q865 and Q866. Q861 is biased when both the squelch trigger output from IC251 pin 14 removes bias from Q865 (when received carrier power exceeds the threshold set by the Control Panel Squelch control) and Q866 bias is removed by ground on the MON line from the Control Panel or by a logic high on the MUTE TSQ/ST line from the Control Panel.

When squelch trigger output at IC251 pin 14 applies logic low while carrier is received, Q868 and Q869 are biased on, which grounds the SQ IND/COS line to the Control Panel to illuminate the Control Panel Busy light. This control line is also grounded when PTT is low (active) through D864.

During transmit, PTT from the Control Panel applies a logic low to IC862 which applies a low from pin 12. This mutes receive audio by removing bias from audio gate Q861 through D864, and removes bias to Q870. With Q870 off, Q864 bias is off, which shuts off source voltage to receiver RF circuits.

LOCAL OSCILLATOR (LOR-408)

Four channel elements, which are Temperature Compensated Crystal Oscillators (TCXO), produce one sixth of first injection frequency. F1 SEL through F4 SEL lines from the Control Panel activate their respective TCXO when grounded. IC862 on the DM-201 Module inverts the logic of the active line, which forward biases the respective DC source gate (Q805/Q801 through Q808/Q804) of the appropriate TCXO. The respective RF-gate diode (D801 through D804) is forward biased by presence of DC source to the TCXO, and TCXO output is passed to a frequency doubler comprised of D807 and D808. Doubler output is amplified by Q809 and frequency tripled by Q810. Three-section helical resonator FIL801 passes the correct harmonic, which is at first injection frequency, and Q811 amplifies it. IC801 amplifies the signal further, and its output level is adjustable by varying current feed to pin 5. LOCAL LEVEL RV805 and Q813 control this current. FIL802 cleans the signal before injection into mixer on the MXR-401 Module.

When Push-To-Talk (PTT) from the Control Panel switches off PTT 9V at P802 pin 2, bias to Q812 is lost and 9-V source current to the multipliers is removed.

71-7600 RF PREAMPLIFIER OPTION

The optional 71-7600 RF Preamplifier replaces the RF-4012 Module of the 71-5052 UHF Receiver. It provides additional receiver gain which increases sensitivity. The RF Preamplifier duplicates RF-4012 Module circuitry plus adds Q601 amplifier stage in front. Another two-stage helical resonator is also added to maintain selectivity. The Preamplified RF Amplifier Module is suffixed with the letter "P".

DC VOLTAGES

SET-UP: RECEIVE MODE CHANNEL 1 SELECTED SQUELCH OPEN

TRANSISTORS

SYMBOL	TYPE	DC VOLTAGE BASE (GATE)	DC VOLTAGE COLL (DRN)	DC VOLTAGE EMIT (SRC)	FUNCTION
Q201	2SC3355	1.4	4.2	0.7	RF AMPLIFIER
Q202	2SC2619	0.6	0.6	0	TEMP. COMPENSATION
Q211	2SC3355	1.4	4.4	0.7	MIXER DRIVER
Q212	2SC2619	0.7	0.7	0	TEMP. COMPENSATION
Q213	2SC3355	1.7	6.7	0.9	MIXER OUTPUT BUFFER
Q251	2SC2620	1.06	.9	0.3	FIRST IF AMPLIFIER
Q252	2SC2620	1.0	6.7	0.3	
Q253	2SA1121	2.8	0	3.4	DEMODULATION BUFFER
Q254	2SC2462	3.4	9.0	2.7	DE-EMPHASIS BUFFER
Q801	2SA1122	8.1	8.8	8.9	TCXO SWITCHES
Q802	2SA1122	8.9	0	8.9	
Q803	2SA1122	8.9	0	8.9	
Q804	2SA1122	8.9	0	8.9	
Q805	2SC2642	0,7	0	0	
Q806	2SC2642	0	8.9	0	
Q807	2SC2642	0	8.9	0	
Q808	2SC2642	0	8.9	0	
Q809	2SC3355	1.4	8.3	0.7	DOUBLER OUTPUT BUFFER
Q810	2SC3355	0	9.0	0	FREQUENCY TRIPLER
Q811	2SC3355	1.4	4.1	0.6	RF AMPLIFIER
Q812	2SC2462	8.9	8.9	8.3	9V SWITCH (PTT)
Q813	2SD1273	5.7	9.0	5.2	SOURCE CURRENT CONTROL
Q814	2SC2619	0.7	0.7	0	TEMP. COMPENSATION
Q861	2SK323	4.0	3.5	3.5	AUDIO GATE
Q862	2SC2462	3.5	9.0	2.9	AUDIO AMPLIFIER
Q863	2SC2462	2.8	9.0	2.2	
Q864	2SA673	8.3	9.0	9.0	9V SWITCH (PTT)
Q865	2SC2462	0.2	4.1	0	SQUELCH CONTROL
Q866	2SC2462	0	4.1	0	SQUELCH CONTROL
Q867	2SC2462	0.6	0	0	MONITOR CONTROL
Q868	2SC1121	8.8	0	8.9	SQ INDICATOR CONTROL
Q869	2SC2462	0	— —	0	
Q870	2SC2462	0.7	0	0	9V SWITCH DRIVER

INTEGRATED CIRCUITS

SYMBOL	TYPE	PIN NO. 1 (10)	2 (11)	3 (12)	4 (13)	5 (14)	6 (15)	7 (16)	8 (17)	9) (18	FUNCTION
IC251	MC3361P	5.4 (0.7)	4.7 (2.8)	5.0 (1.0)	5.4 4 (0.5)	.3 (5.7)	4.3 (0)	4.3 (1.7)	5.4	2.3	2ND IF
IC252	NJM4560D	6.1	5.3	5.3	0	5.3	5.3	5.3	9.	— —	SQ AMP.
IC421	TA78009AP	1	3.8	0	9.0	— —	— —	— —	— —	— —	9V REG.
IC801	UP-400P8.5A UP-425P7.2A	0	08	.9	0	5.2	0	0	— —	— —	LO. RF AMP.
IC861	HA1388	0.8 (13.7)	4.7 (13.3)	0 (7.0)	0 — —	1.3 — —	0.8 — —	7.0 — —	13.3 — —	0 — —	AUDIO OUTPUT

71-5052 ALIGNMENT

TEST EQUIPMENT REQUIRED

Test Instrument	Instrument Capabilities	Use
Frequency Meter or Frequency Counter	455 kHz; 1.0 ppm accuracy	Carrier frequency measurement
RF Signal Generator	406-470 MHz range; 0.1-1 KuV output; 3 kHz FM mod. with 1 kHz tone	All receiver measurements
Load Resistor	4 ohms, 20 watt	Speaker load for all (audio) receiver measurements
Distortion Analyzer	<1%, 1 kHz notch	IF alignment
AC Voltmeter	1 to 10 V_{rms}	Audio level adjustments
Digital Multimeter	0.1 to 20 volts	DC Test point measurements and power supply setup

SETUP

1. Install channel elements on the Exciter Board as follows:
   Channel 1: TCXO1 Channel 3: TCXO3
   Channel 2: TCXO2 Channel 4: TCXO4

2. Connect a 4-ohm, 20-watt resistor to pins 4 and 6 of J305 (MISC). The Internal Speaker Jumper between pins 5 and 6 must be temporarily disconnected to make this connection. The resistor serves as a constant load to replace the speaker's inconsistencies so that measurements will be accurate.

   CAUTION: Both speaker terminals are LIVE! Never ground either one. Connect grounded receiver-audio measuring equipment to only one side of the speaker, and chassis ground. Normally, voltage measurements will be half of true values.

3. Turn on the Power Supply, then set Control Panel switches as follows:

   CHANNEL for center-most receive frequency
   VOLUME to mid-position
   SQUELCH fully counterclockwise
   MONITOR off
   LOCAL/REMOTE to Local
   DIRECT/REPEAT to Direct

LOCAL OSCILLATOR

1. Set LOCAL LEVEL RV805 to maximum. Adjust L801, L802, and FIL801 to obtain maximum DC voltage at TP801.

2. Adjust FIL802 to obtain maximum DC voltage on TP802.

3. Adjust INJECTION LEVEL RV805 to obtain 1.4 Volts DC on TP802. If a milliwattmeter is available, RV805 can be set more accurately by adjusting for +20 dBm output at J801.

4. Check TP802 voltage with each of the other channels selected. If it changes more than 0.3 Volts (2 dBm), cross-tune FIL801 and FIL802 for balance.

5. Re-connect the coax jumper from J212 to J801.

RF AMPLIFIER AND MIXER

1. Set the SQUELCH control to minimum (open).

2. Select the center-most channel, again.

3. Apply enough on-channel RF signal, that is modulated by 1 kHz at 60% (3 kHz) modulation, to the ANTENNA JACK J201 so that 12 dB SINAD is achieved.

4. Adjust L201, L202, (and L601, L602; if equipped with the 71-7600 Pre-amplifier) and L211-L214 so that minimum RF signal is needed at ANTENNA JACK J201 to maintain 12 dB SINAD.

I.F. AND DETECTOR

1. Remove modulation from the applied RF signal.

2. Select each channel and adjust each channel element for exactly 455 kHz at IC251-pin 7, using a frequency counter.

   Alternate Method: Adjust each channel element for exact injection frequency as measured at J801.

3. Replace the 1 kHz-tone modulation (60%) on the applied RF signal.

4. Increase applied RF signal level to 1 mV. Adjust QUADRATURE DETECTOR L253 to obtain maximum audio output.

5. Decrease applied RF signal level to obtain 12 dB SINAD. Adjust L251, L252, L257, and L258 for best SINAD (if necessary, reduce signal level to keep SINAD below 18 dB).

6. Increase applied RF signal level to 1 mV. Adjust L251, L252, L257, and L258 for minimum distortion of the audio signal at the 4-ohm audio load. If a distortion analyzer is not available, this step may be skipped; however, receiver audio distortion may exceed specifications.

AUDIO AND SQUELCH

1. Decrease the modulation of the applied RF signal to 2 kHz deviation (40%).
2. Set the Control Panel VOLUME control to maximum (full clockwise).
3. Adjust RV861 for 6.9 V_{rms} across the 4-ohm audio load.
4. Set Control Panel SQUELCH to maximum (fully closed). Decrease the applied RF signal to -105 dBm (1.25 μV). Set SQUELCH RANGE RV251 full clockwise, then rotate it counterclockwise until squelch closes (audio ceases).

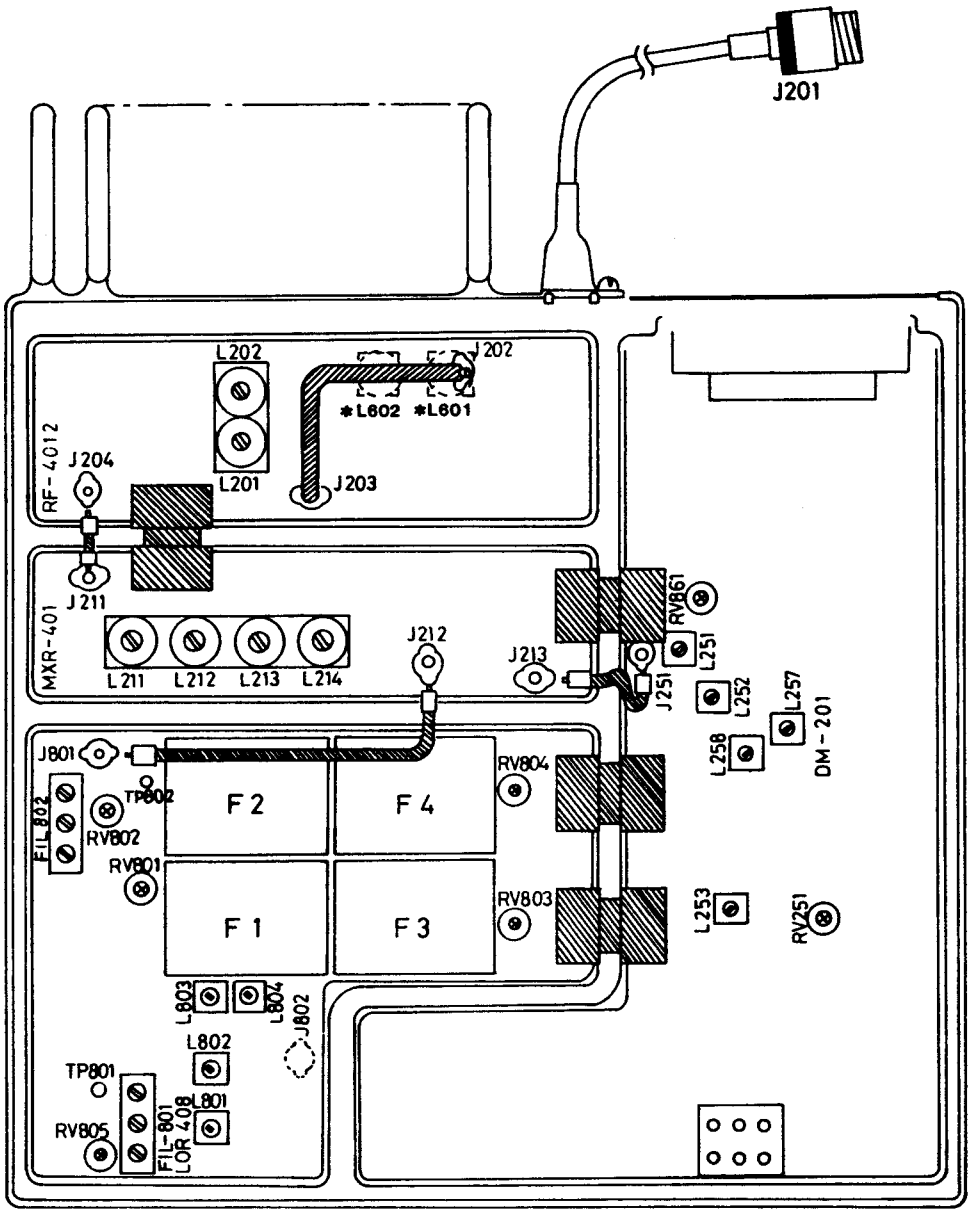

Figure 4 - 1 — 71-5052 Adjustment Map

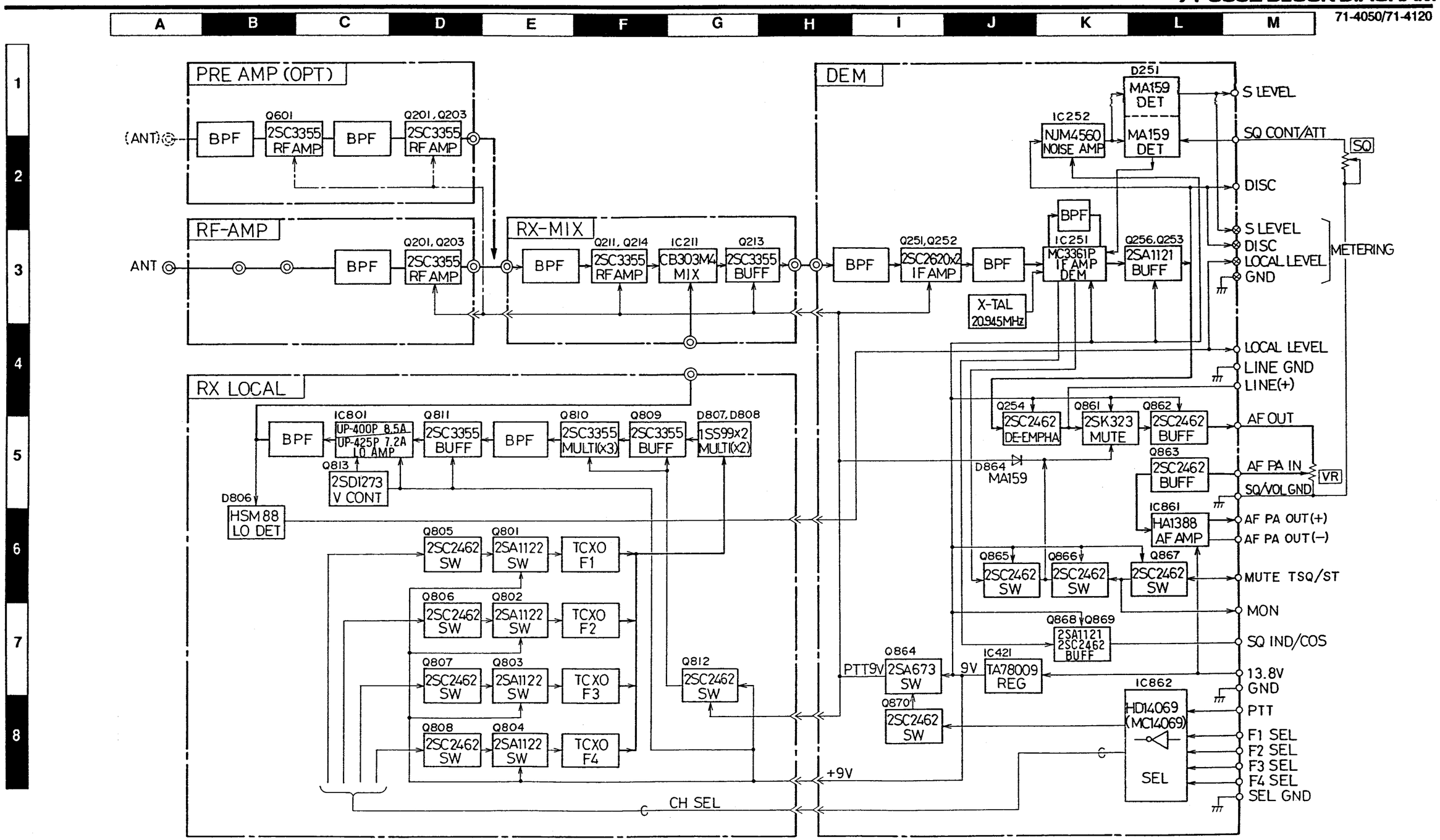
A B C D E F G H I J K L M
1 2 3 4 5 6 7 8
PRE AMP (OPT)
(ANT)
BPF
Q601
2SC3355
RF AMP
BPF
Q201, Q203
2SC3355
RF AMP
RF-AMP
ANT
BPF
Q201, Q203
2SC3355
RF AMP
RX-MIX
BPF
Q211, Q214
2SC3355
RF AMP
IC211
CB303M4
MIX
Q213
2SC3355
BUFF
RX LOCAL
BPF
IC801
UP-400P 8.5A
UP-425P 7.2A
LO AMP
Q811
2SC3355
BUFF
BPF
Q810
2SC3355
MULTI(x3)
Q809
2SC3355
BUFF
D807, D808
1SS99x2
MULTI(x2)
Q813
2SD1273
V CONT
D806
HSM88
LO DET
Q805
2SC2462
SW
Q801
2SA1122
SW
TCXO
F1
Q806
2SC2462
SW
Q802
2SA1122
SW
TCXO
F2
Q807
2SC2462
SW
Q803
2SA1122
SW
TCXO
F3
Q808
2SC2462
SW
Q804
2SA1122
SW
TCXO
F4
Q812
2SC2462
SW
CH SEL
DEM
BPF
Q251, Q252
2SC2620x2
IF AMP
BPF
X-TAL
20.945MHz
BPF
IC251
MC3361P
IF AMP
DEM
Q256, Q253
2SA1121
BUFF
IC252
NJM4560
NOISE AMP
D251
MA159
DET
MA159
DET
Q254
2SC2462
DE-EMPHA
Q861
2SK323
MUTE
Q862
2SC2462
BUFF
Q863
2SC2462
BUFF
D864
MA159
IC861
HA1388
AF AMP
Q865
2SC2462
SW
Q866
2SC2462
SW
Q867
2SC2462
SW
Q868, Q869
2SA1121
2SC2462
BUFF
Q864
2SA673
SW
PTT9V
9V
IC421
TA78009
REG
Q870
2SC2462
SW
+9V
IC862
HD14069
(MC14069)
SEL
S LEVEL
SQ CONT/ATT
SQ
DISC
S LEVEL
DISC
LOCAL LEVEL
GND
METERING
LOCAL LEVEL
LINE GND
LINE(+)
AF OUT
AF PA IN
VR
SQ/VOL GND
AF PA OUT(+)
AF PA OUT(−)
MUTE TSQ/ST
MON
SQ IND/COS
13.8V
GND
PTT
F1 SEL
F2 SEL
F3 SEL
F4 SEL
SEL GND

TOP VIEW

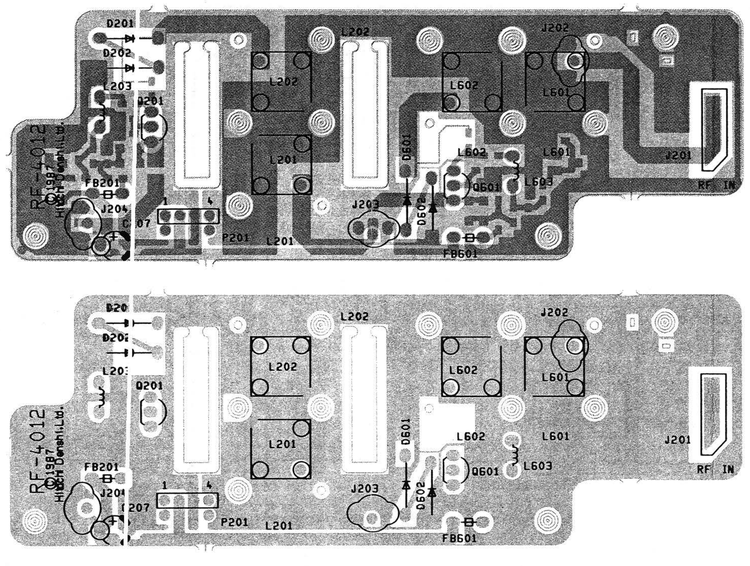

BOTTOM VIEW

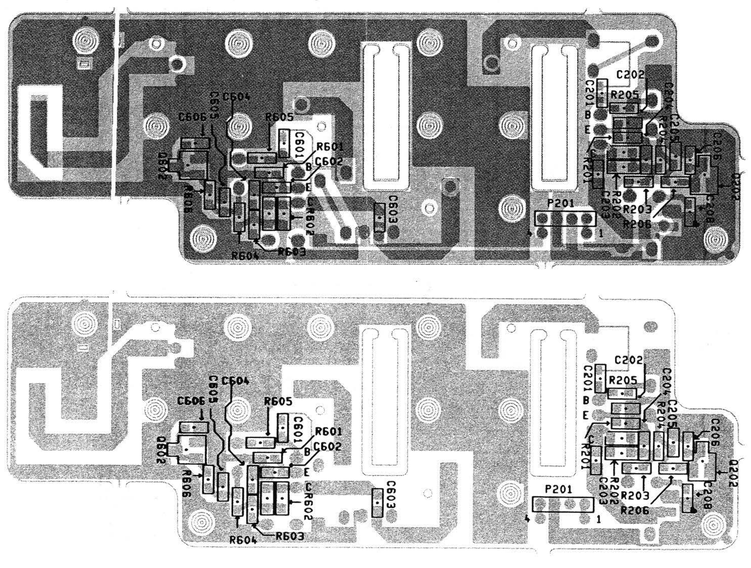

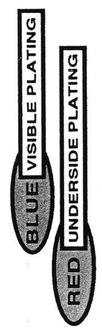

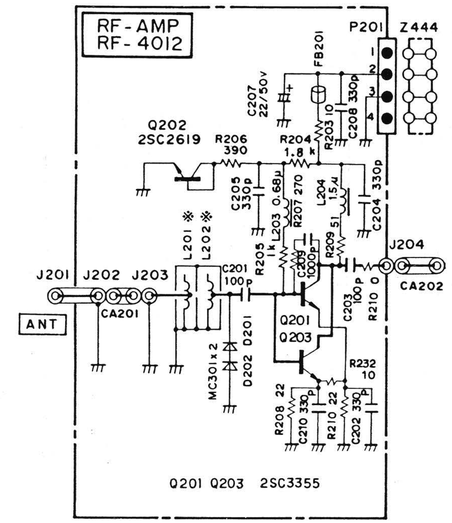

71-7600 UHF PRE-AMPLIFIER OPTION SCHEMATIC

(REPLACES STANDARD RF AMPLIFIER)

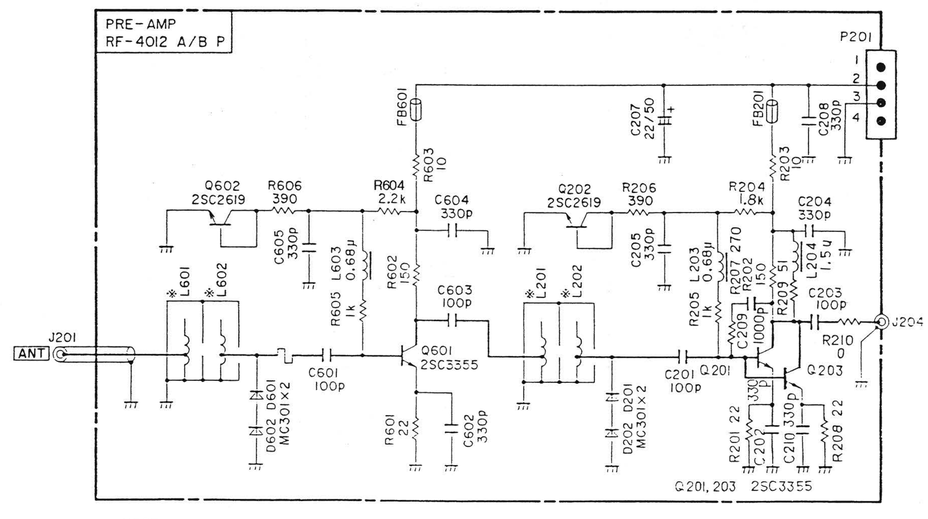

※ NOTE

	L601～L602	L201～L202
A BAND	7.5T	7.5T
B BAND	7.0T	7.0T

MXR-401 SCHEMATIC

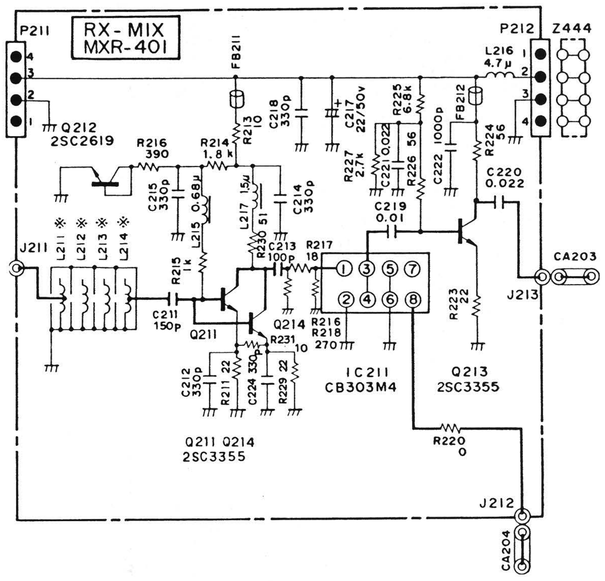

TOP VIEW

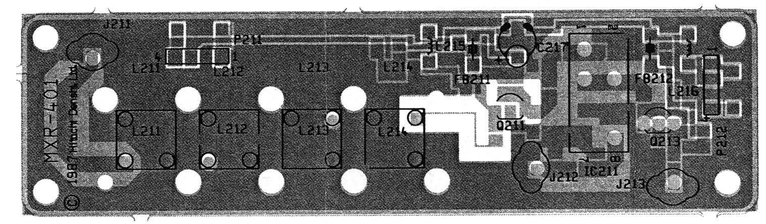

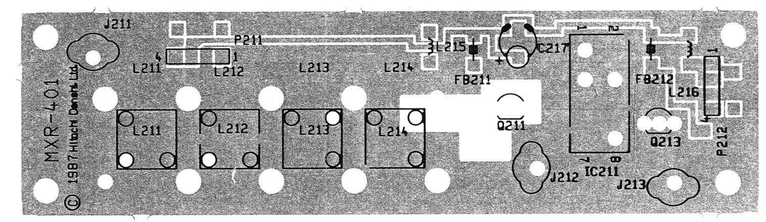

BOTTOM VIEW

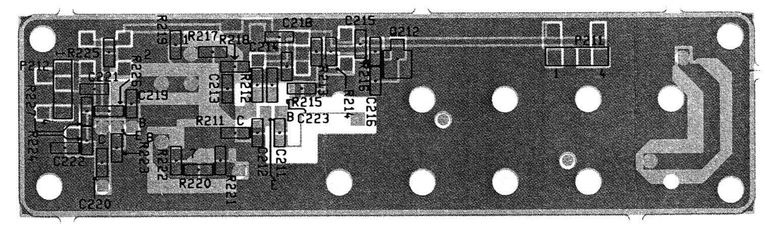

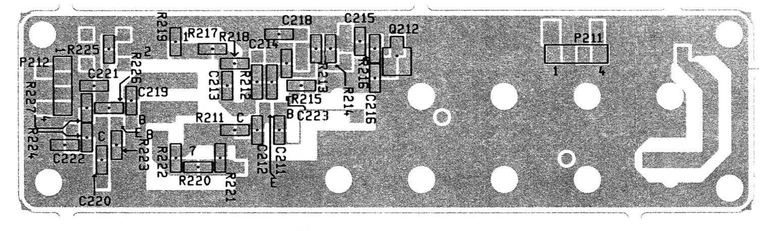

BLUE VISIBLE PLATING

RED UNDERSIDE PLATING

71-4050/71-4120

A B C D E F G H I J K L M

1 2 3 4 5 6 7 8

TOP VIEW

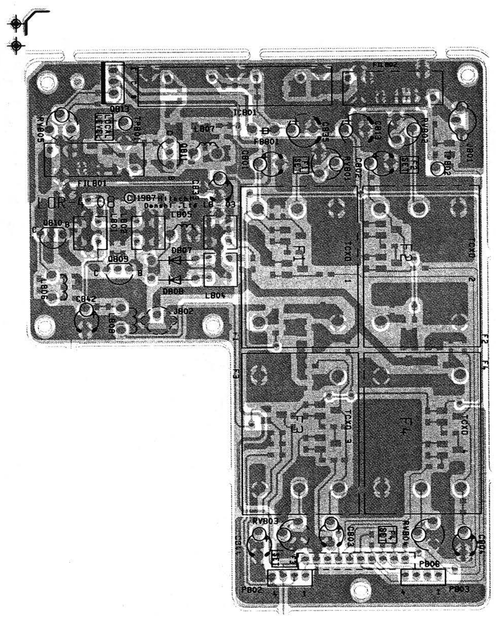

BOTTOM VIEW

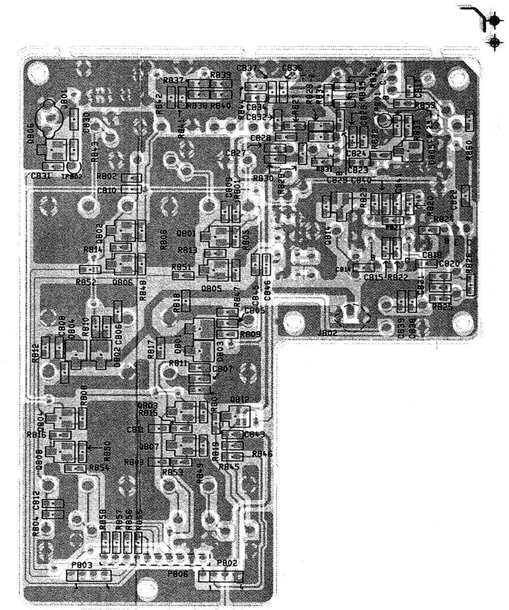

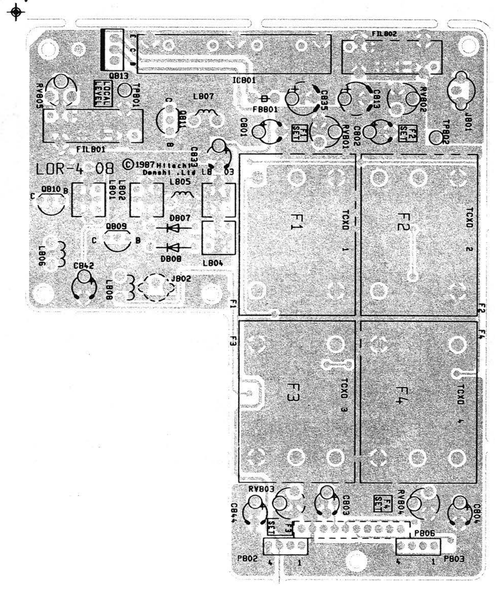

BLUE VISIBLE PLATING

RED UNDERSIDE PLATING

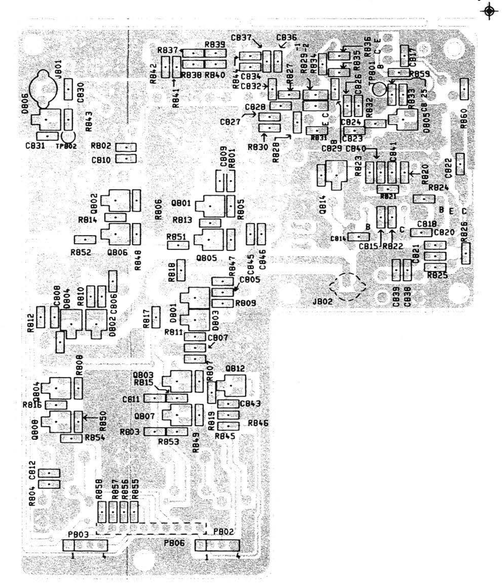

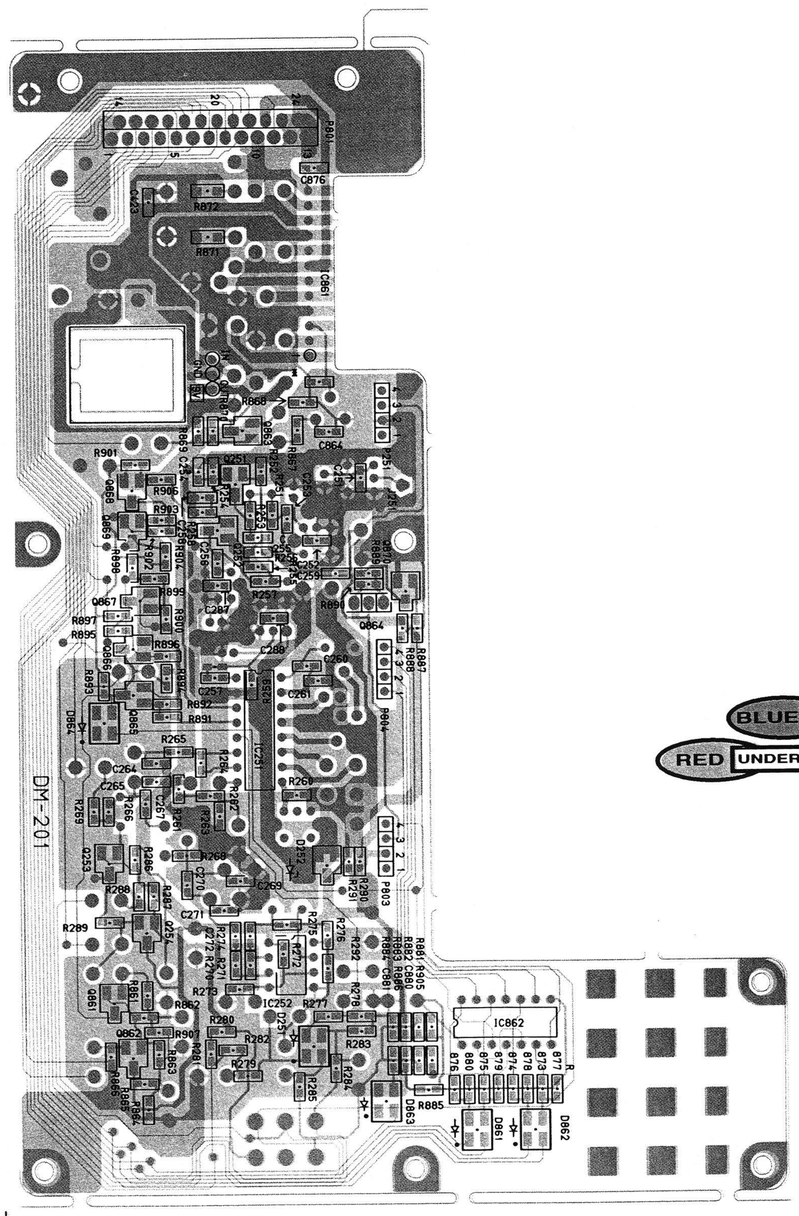

BLUE VISIBLE PLATING

RED UNDERSIDE PLATING

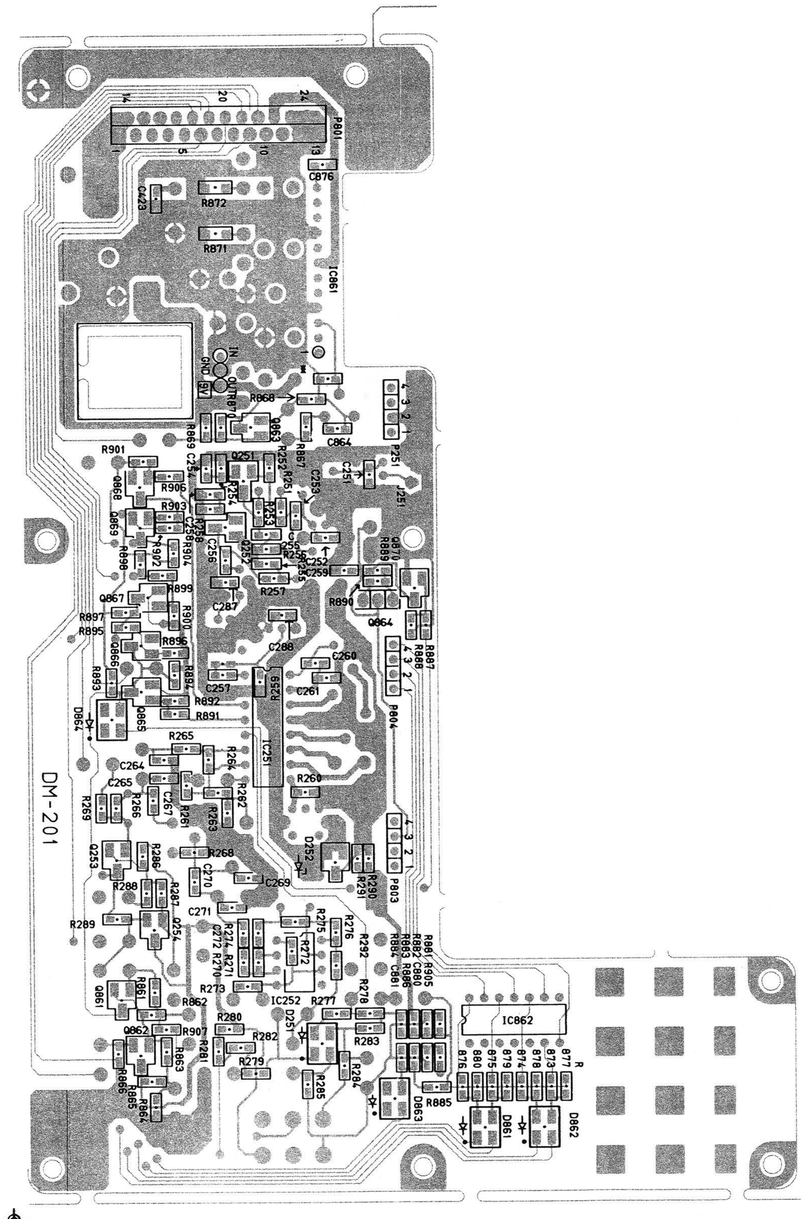

DM-201 LAYOUT — TOP VIEW

71-4050/71-4120

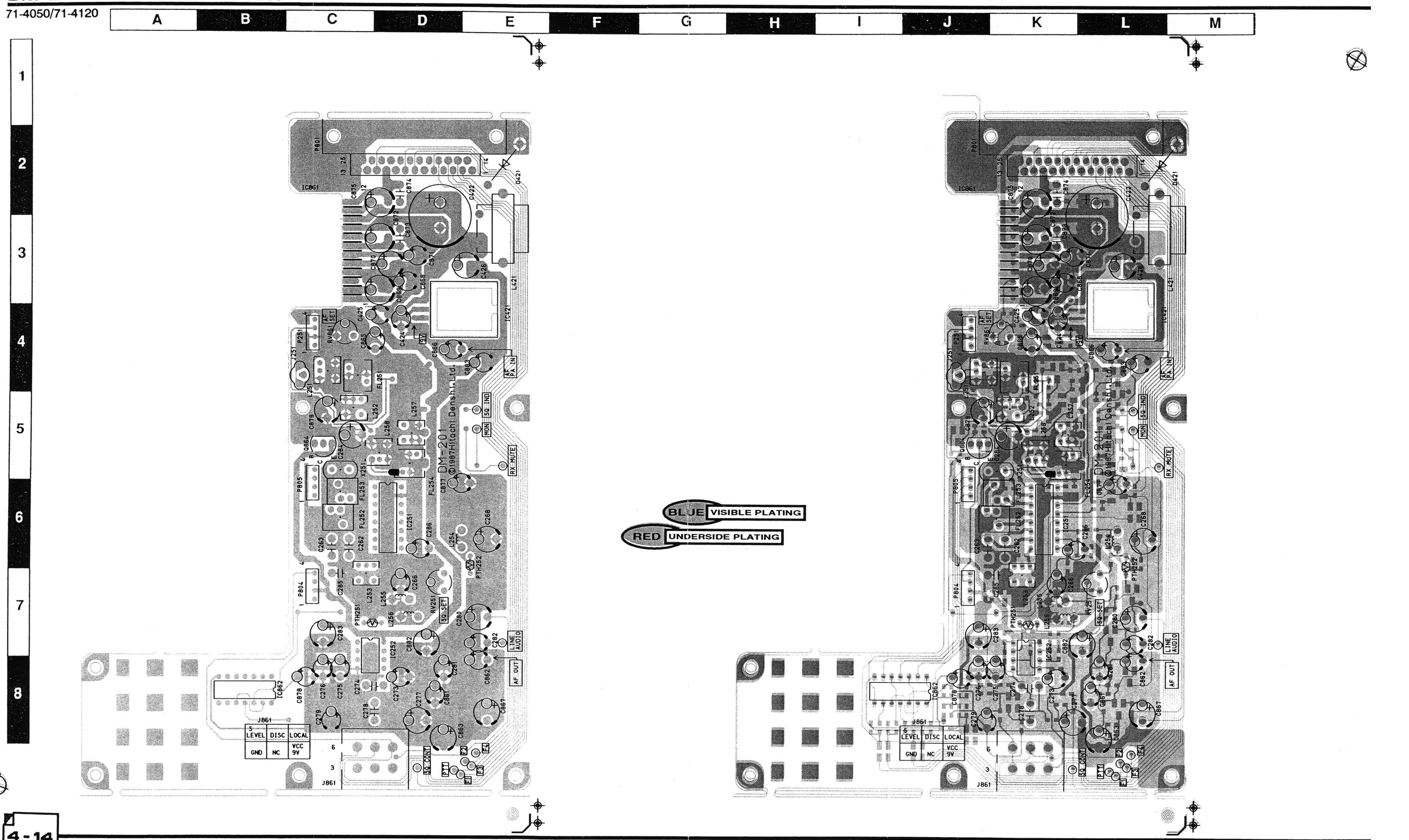

71-4050/71-4120

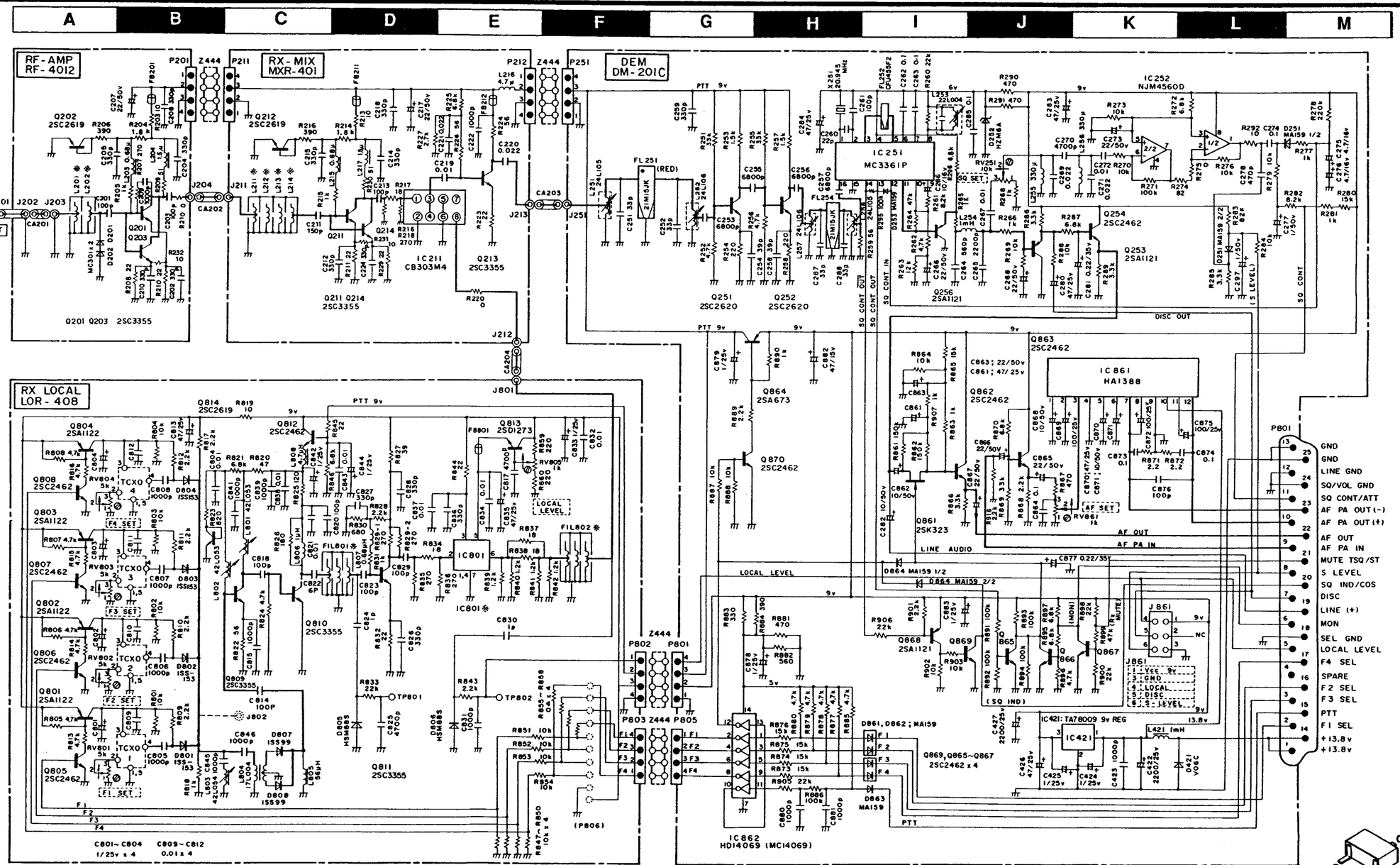

※: NOTE 1)

	IC801	FIL801	FIL802	L201~L202	L211~L214
A BAND	UP-4000p 8.5A	7HT-396.6M	7HT-396.6M	7.5T	7.5T
B BAND	UP-425p 7.2A	7HT-438.6M	7HT-438.6M	7.0T	7.0T

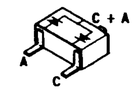

D251, D253, D801, D802, D803, D804, D805, D806, D861, D862, D863, D864

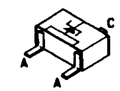

D252

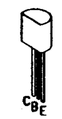

Q201, Q203, Q211, Q213, Q214, Q601, Q809, Q810, Q811

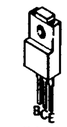

Q813

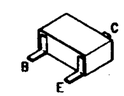

Q251, Q252, Q253, Q254, Q256, Q812, Q862, Q863, Q865, Q866, Q867, Q868, Q869, Q870

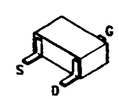

Q861

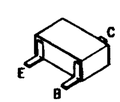

Q814

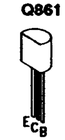

Q864

71-5052 EXPLODED VIEW

71-4050/71-4120

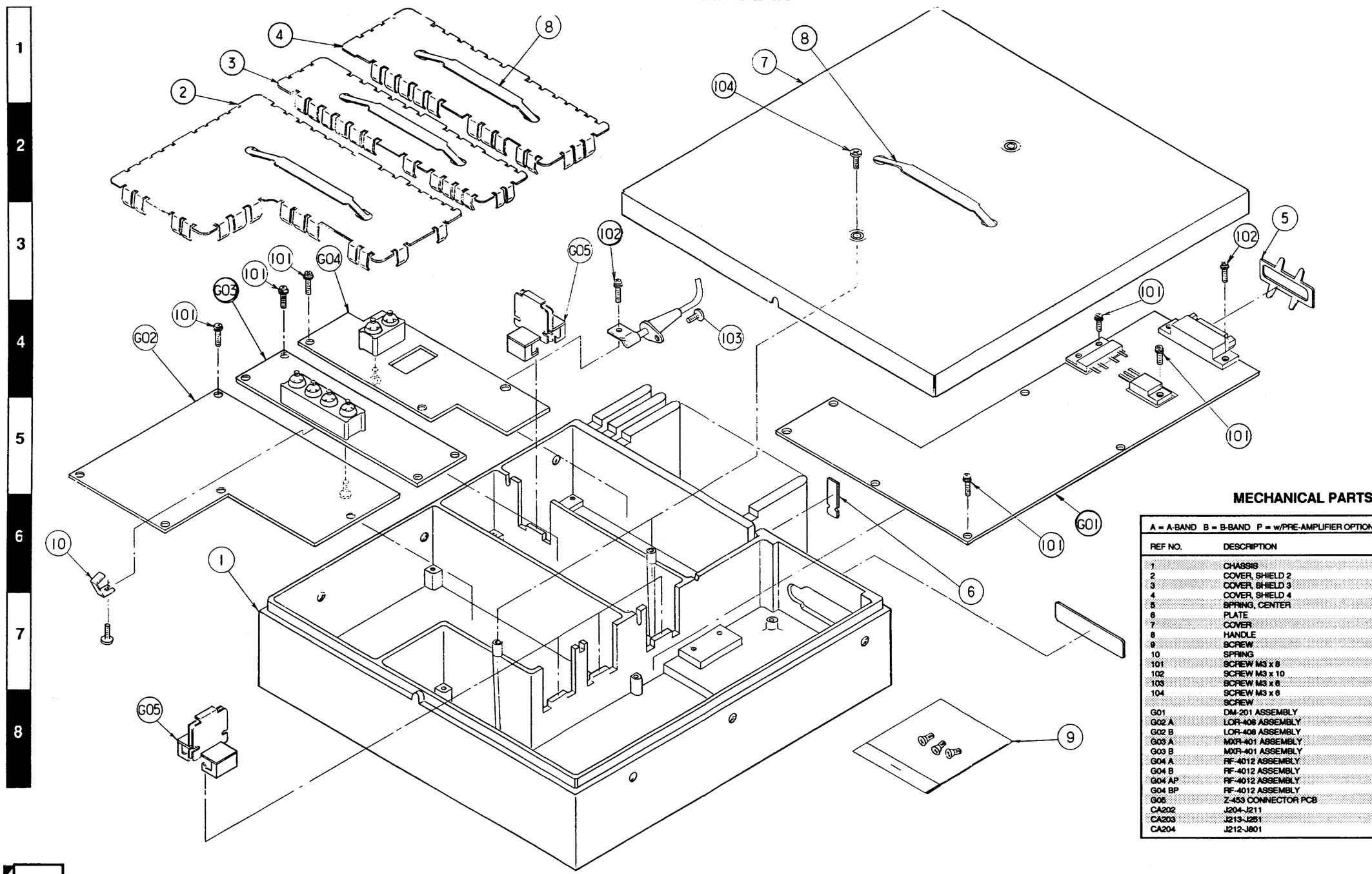

MECHANICAL PARTS

A = A-BAND B = B-BAND P = w/PRE-AMPLIFIER OPTION

REF NO.	DESCRIPTION	PART NO.
1	CHASSIS	70-010172
2	COVER, SHIELD 2	70-010173
3	COVER, SHIELD 3	70-010174
4	COVER, SHIELD 4	70-010175
5	SPRING, CENTER	70-052092
6	PLATE	70-010176
7	COVER	70-010177
8	HANDLE	70-018064
9	SCREW	70-151811
10	SPRING	70-152093
101	SCREW M3 x 8	70-151810
102	SCREW M3 x 10	70-151273
103	SCREW M3 x 8	70-151816
104	SCREW M3 x 6	70-151356
	SCREW	70-151812
G01	DM-201 ASSEMBLY	70-075294
G02 A	LOR-406 ASSEMBLY	70-075295
G02 B	LOR-406 ASSEMBLY	70-075345
G03 A	MXR-401 ASSEMBLY	70-075296
G03 B	MXR-401 ASSEMBLY	70-075346
G04 A	RF-4012 ASSEMBLY	70-075297
G04 B	RF-4012 ASSEMBLY	70-075347
G04 AP	RF-4012 ASSEMBLY	70-075286
G04 BP	RF-4012 ASSEMBLY	70-075286
G05	Z-453 CONNECTOR PCB	70-075298
CA202	J204-J211	70-034304
CA203	J213-J251	70-034304
CA204	J212-J801	70-034307

DM-201 MODULATOR BOARD

T = Topside
U = Underside

REF. NO.	LOC	DESCRIPTION	PART NO.
DM-201		ENTIRE ASSEMBLY	70-075294
		PLUGS AND CONNECTORS	
J251		JACK, MIX OUT	70-159089
J861		350841-1 SOCKET	70-159465
P251		PLUG, IF IN	70-159408
P801		PLUG, INTERFACE	70-159495
P804		PLUG, PCB INTERFACE	70-159401
P805		PLUG, PCB INTERFACE	70-159401
		MISCELLANEOUS	
	U	SHIELD, BPL	70-085222
X251	T	20.945 MHz	70-128021
		INTEGRATED CIRCUITS	
IC251	T	MC3361P	70-076454
IC252	T	NJM4560D	70-076455
IC421	T	TA78009AP	70-076449
IC861	T	HA1388	70-076456
IC862	T	HD14069UBP	70-076097
		TRANSISTORS	
Q251	U	2SC26200B	70-080161
Q252	U	2SC26200B	70-080161
Q253	U	2SA1121SC	70-080159
Q254	U	2SC2462LC	70-080160
Q256	U	2SA1121	70-080289
Q861	U	2SK323C	70-080163
Q862	U	2SC2462LC	70-080160
Q863	U	2SC2462LC	70-080160
Q864	T	2SA673C	70-080079
Q865	U	2SC2462LC	70-080160
Q866	U	2SC2462LC	70-080160
Q867	U	2SC2462LC	70-080160
Q868	U	2SA1121SC	70-080159
Q869	U	2SC2462LC	70-080160
Q870	U	2SC2462LC	70-080160
		DIODES	
D251	U	MA159	70-085222
D252	U	HZM6A	70-085230
D253	U	MA159	70-085222
D421	T	U06C	70-085227
D861	U	MA159	70-085222
D862	U	MA159	70-085222
D863	U	MA159	70-085222
D864	U	MA159	70-085222
		FILTER	
FL251	T	21M15JK	70-179067
FL252	T	CFU455F2	70-179018
FL254	T	21M15JK	70-179068
		COILS AND INDUCTORS	
L251	T	24L105 TRANSFORMER	70-090302
L252	T	24L06 TRANSFORMER	70-090303
L253	T	22L004 TRANSFORMER	70-090112
L254	T	ELF0505 SKI-102K-2 INDUCTOR	70-178086
L255	T	ELF0505 SKI-331K-2 INDUCTOR	70-178087
L256	T	ELF0505 SKI-331K-2 INDUCTOR	70-178087
L257	T	24L06 TRANSFORMER	70-090303
L258	T	24L105 TRANSFORMER	70-090302
L421	T	1 mH COIL	70-178057
		CONTROLS	
RV251	T	TIGHT SQ 10K	70-144045
RV861	T	AD ADJ 1K	70-144044

REF. NO.	LOC	DESCRIPTION	PART NO.
		PLASTIC CAPACITORS	
C262	T	0.10 µF, 50 V	70-138189
C263	T	0.10 µF, 50 V	70-138189
C274	T	0.10 µF, 50 V	70-138189
C285	T	0.10 µF, 50 V	70-138189
C873	T	0.10 µF, 50 V	70-138189
C874	T	0.10 µF, 50 V	70-138189
		TANTALUM CAPACITORS	
C275	T	4.7 µF, 16 V	70-135149
C281	T	0.22 µF, 35 V	70-138102
C286	T	10 µF, 16 V	70-135090
		ALUMINUM SOLID CAPACITORS	
C424	T	1 µF, 25 V	70-135369
C425	T	1 µF, 25 V	70-135369
C878	T	1 µF, 25 V	70-135369
C879	T	1 µF, 25 V	70-135369
C863	T	1 µF, 25 V	70-135369
		ELECTROLYTIC CAPACITORS	
C266	T	22 µF, 50 V	70-135143
C268	T	22 µF, 50 V	70-135143
C273	T	22 µF, 50 V	70-135143
C277	T	1 µF, 50 V	70-135147
C279	T	1 µF, 50 V	70-135147
C280	T	47 µF, 25 V	70-135144
C282	T	10 µF, 50 V	70-135142
C283	T	47 µF, 25 V	70-135144
C284	T	47 µF, 25 V	70-135144
C422	T	2200 µF, 25 V	70-135151
C426	T	47 µF, 25 V	70-135144
C861	T	47 µF, 25 V	70-135144
C862	T	10 µF, 50 V	70-135142
C863	T	22 µF, 50 V	70-135143
C865	T	22 µF, 50 V	70-135143
C866	T	22 µF, 50 V	70-135143
C867	T	22 µF, 50 V	70-135143
C868	T	10 µF, 50 V	70-135142
C869	T	100 µF, 25 V	70-135152
C870	T	47 µF, 25 V	70-135144
C871	T	10 µF, 50 V	70-135142
C872	T	100 µF, 25 V	70-135152
C875	T	100 µF, 25 V	70-135152
C882	T	47 µF, 25 V	70-135144
		CERAMIC CAPACITORS	
C251	U	33 pF, 50 V	70-138232
C252	U	33 pF, 50 V	70-138232
C253	U	6800 pF, 50 V	70-138173
C254	U	39 pF, 50 V	70-138233
C255	U	6800 pF, 50 V	70-138173
C256	U	6800 pF, 50 V	70-138173
C257	U	6800 pF, 50 V	70-138173
C258	U	39 pF, 50 V	70-138233
C259	U	330 pF, 50 V	70-138225
C261	U	100 pF, 50 V	70-138175
C264	U	560 pF, 50 V	70-138234
C265	U	2200 pF, 50 V	70-138235
C267	U	10000 pF, 50 V	70-138166
C269	U	22000 pF, 50 V	70-138162
C270	U	4700 pF, 50 V	70-138163
C271	U	22000 pF, 50 V	70-138162
C272	U	10000 pF, 50 V	70-138166
C278	U	470 pF, 50 V	70-133016
C280	U	22 pF, 50 V	70-138171
C287	U	33 pF, 50 V	70-138232
C288	U	33 pF, 50 V	70-138232

4

DM-201 MODULATOR BOARD (Continued)

REF. NO.	LOC	DESCRIPTION	PART NO.
		CERAMIC CHIP CAPACITORS (Continued)	
C423	U	1000 pF, 50 V	70-138170
C864	U	100000 pF, 50 V	70-138236
C878	U	100 pF, 50 V	70-138175
C880	U	1000 pF, 50 V	70-138170
C881	U	1000 pF, 50 V	70-138170
		METAL CHIP RESISTORS	
R251	U	33 kΩ, 1/10 W	70-144112
R252	U	4.7 kΩ, 1/10 W	70-144123
R253	U	1.5 kΩ, 1/10 W	70-144134
R254	U	220 Ω, 1/10 W	70-145131
R255	U	33 kΩ, 1/10 W	70-144112
R256	U	4.7 kΩ, 1/10 W	70-144123
R257	U	1.5 kΩ, 1/10 W	70-144134
R258	U	220 Ω, 1/10 W	70-145131
R259	U	56 Ω, 1/10 W	70-145142
R260	U	22 kΩ, 1/10 W	70-144121
R261	U	8.2 kΩ, 1/10 W	70-140305
R262	U	4.7 kΩ, 1/10 W	70-144123
R263	U	12 kΩ, 1/10 W	70-144111
R264	U	47 kΩ, 1/10 W	70-145145
R265	U	1 kΩ, 1/10 W	70-144125
R266	U	1 kΩ, 1/10 W	70-144125
R266	U	3.3 kΩ, 1/10 W	70-144118
R268	U	1 kΩ, 1/10 W	70-144125
R269	U	10 kΩ, 1/10 W	70-144120
R270	U	10 kΩ, 1/10 W	70-144120
R271	U	100 kΩ, 1/10 W	70-145128
R272	U	6.8 kΩ, 1/10 W	70-144158
R273	U	10 kΩ, 1/10 W	70-144120
R274	U	82 Ω, 1/10 W	70-144172
R275	U	0 Ω, 1/10 W	70-144108
R276	U	10 kΩ, 1/10 W	70-144120
R277	U	1 kΩ, 1/10 W	70-144125
R278	U	220 kΩ, 1/10 W	70-144131
R279	U	10 kΩ, 1/10 W	70-144120
R280	U	15 kΩ, 1/10 W	70-144122
R281	U	1 kΩ, 1/10 W	70-144125
R282	U	8.2 kΩ, 1/10 W	70-140305
R283	U	82 kΩ, 1/10 W	70-144173
R284	U	10 kΩ, 1/10 W	70-144120
R285	U	3.3 kΩ, 1/10 W	70-144118
R286	U	3.3 kΩ, 1/10 W	70-144118
R287	U	6.8 kΩ, 1/10 W	70-144158
R288	U	10 kΩ, 1/10 W	70-144120
R289	U	3.3 kΩ, 1/10 W	70-144118
R290	U	470 Ω, 1/10 W	70-144156
R291	U	470 Ω, 1/10 W	70-144156

REF. NO.	LOC	DESCRIPTION	PART NO.
		METAL CHIP RESISTORS (Continued)	
R292	U	10 Ω, 1/10 W	70-144115
R295	U	100 Ω, 1/10 W	70-144321
R296	U	6.8 Ω, 1/10 W	70-144158
R861	U	150 kΩ, 1/10 W	70-144129
R862	U	150 kΩ, 1/10 W	70-144129
R863	U	1 kΩ, 1/10 W	70-144125
R864	U	10 kΩ, 1/10 W	70-144120
R865	U	15 kΩ, 1/10 W	70-144122
R867	U	470 Ω, 1/10 W	70-144156
R868	U	2.2 kΩ, 1/10 W	70-144113
R869	U	33 kΩ, 1/10 W	70-144112
R870	U	68 kΩ, 1/10 W	70-144119
R871	U	2.2 Ω, 1/10 W	70-144174
R872	U	2.2 Ω, 1/10 W	70-144174
R873	U	15 kΩ, 1/10 W	70-144122
R874	U	15 kΩ, 1/10 W	70-144122
R875	U	15 kΩ, 1/10 W	70-144122
R876	U	15 kΩ, 1/10 W	70-144122
R877	U	4.7 kΩ, 1/10 W	70-144123
R878	U	4.7 kΩ, 1/10 W	70-144123
R879	U	4.7 kΩ, 1/10 W	70-144123
R880	U	4.7 kΩ, 1/10 W	70-144123
R881	U	470 Ω, 1/10 W	70-144156
R882	U	560 Ω, 1/10 W	70-144130
R883	U	330 Ω, 1/10 W	70-144164
R884	U	390 Ω, 1/10 W	70-144161
R885	U	4.7 kΩ, 1/10 W	70-144123
R886	U	100 kΩ, 1/10 W	70-145128
R887	U	10 kΩ, 1/10 W	70-144120
R888	U	10 kΩ, 1/10 W	70-144120
R889	U	2.2 kΩ, 1/10 W	70-144113
R890	U	1 kΩ, 1/10 W	70-144125
R891	U	100 kΩ, 1/10 W	70-145128
R892	U	100 kΩ, 1/10 W	70-145128
R893	U	100 kΩ, 1/10 W	70-145128
R894	U	100 kΩ, 1/10 W	70-145128
R895	U	6.8 kΩ, 1/10 W	70-144158
R896	U	4.7 kΩ, 1/10 W	70-144123
R897	U	6.8 kΩ, 1/10 W	70-144158
R898	U	22 kΩ, 1/10 W	70-144121
R899	U	47 kΩ, 1/10 W	70-145145
R900	U	22 kΩ, 1/10 W	70-144121
R900	U	22 kΩ, 1/10 W	70-144121
R901	U	2.2 kΩ, 1/10 W	70-144113
R902	U	10 kΩ, 1/10 W	70-144120
R903	U	10 kΩ, 1/10 W	70-144120
R905	U	22 kΩ, 1/10 W	70-144121
R906	U	22 kΩ, 1/10 W	70-144121
R907	U	1 kΩ, 1/10 W	70-144125

LOR-408 MODULATOR BOARD

A = A-Band T = Topside
B = B-Band U = Underside

REF. NO.	LOC	DESCRIPTION	PART NO.
LOR-408 A		ENTIRE ASSEMBLY	70-075295
LOR-408 B		ENTIRE ASSEMBLY	70-075345
		INTEGRATED CIRCUITS	
IC801 A	T	UP-400P1.5A	70-076457
IC801 B	T	UP-425P7.2A	70-076445
		TRANSISTORS	
Q801	U	2SA1122CC	70-080162
Q802	U	2SA1122CC	70-080162
Q803	U	2SA1122CC	70-080162
Q804	U	2SA1122CC	70-080162
Q805	U	2SC2462LC	70-080160
Q806	U	2SC2462LC	70-080160
Q807	U	2SC2462LC	70-080160
Q808	U	2SC2462LC	70-080160

REF. NO.	LOC	DESCRIPTION	PART NO.
		TRANSISTORS (Continued)	
Q809	T	2SC3355	70-080280
Q810	T	2SC3355	70-080280
Q811	T	2SC3355	70-080280
Q812	U	2SC2462LC	70-080160
Q813	T	2SD1273Q	70-080213
Q814	U	2SC2619FB	70-080281
		DIODES	
D801	U	1SS153	70-095102
D802	U	1SS153	70-095102
D803	U	1SS153	70-095102
D804	U	1SS153	70-095102
D805	U	HSM88S	70-085226
D806	U	HSM88S	70-085226
D807	T	1SS99	70-085216
D808	T	1SS99	70-085216

LOR-408 MODULATOR BOARD (Continued)

REF. NO.	LOC	DESCRIPTION	PART NO.
		COILS AND INDUCTORS	
L801	T	42L053	70-090304
L802	T	42L053	70-090304
L803	T	42L054	70-090305
L804	T	17L0004 INDUCTOR	70-090114
L805	T	ELF050 INDUCTOR	70-090306
L806	T	ELE-V IRO KA	70-090307
L807	T	ELE-V R68 MA INDUCTOR	70-178080
L808	T	ELE-V 4R7 KA INDUCTOR	70-178083
FB801	T	BL02 RN1 R62	70-090122
		CONTROLS	
RV801	T	FREQUENCY ADJUST 5K	70-164086
RV802	T	FREQUENCY ADJUST 5K	70-164086
RV803	T	FREQUENCY ADJUST 5K	70-164086
RV804	T	FREQUENCY ADJUST 5K	70-164086
RV805	T	LOCAL LEVEL	70-144044
		FILTERS	
FIL801 A	T	7HT-396.6 MHz	70-179069
FIL801 B	T	7HT-436.6 MHz	70-179070
FIL802 A	T	7HT-396.6 MHz	70-179069
FIL802 B	T	7HT-436.6 MHz	70-179070
		ALUMINUM SOLID CAPACITORS	
C801	T	1 µF, 25 V	70-135369
C802	T	1 µF, 25 V	70-135369
C803	T	1 µF, 25 V	70-135369
C804	T	1 µF, 25 V	70-135369
C833	T	1 µF, 25 V	70-135369
C842	T	1 µF, 25 V	70-135369
C844	T	1 µF, 25 V	70-135369
C954	T	1 µF, 25 V	70-135369
C957	T	1 µF, 25 V	70-135369
C961	T	1 µF, 25 V	70-135369
		ELECTROLYTIC CAPACITORS	
C813	T	47 µF, 25 V	70-135144
C835	T	47 µF, 25 V	70-135144
		CERAMIC CHIP CAPACITORS	
C805	U	1000 pF, 50 V	70-138170
C806	U	1000 pF, 50 V	70-138170
C807	U	1000 pF, 50 V	70-138170
C808	U	1000 pF, 50 V	70-138170
C809	U	10000 pF, 50 V	70-138168
C810	U	10000 pF, 50 V	70-138168
C811	U	10000 pF, 50 V	70-138168
C812	U	10000 pF, 50 V	70-138168
C814	U	100 pF, 50 V	70-138175
C815	U	1000 pF, 50 V	70-138170
C817	U	4800 pF, 50 V	70-138163
C818	U	100 pF, 50 V	70-138175
C820	U	100 pF, 50 V	70-138175
C821	U	10000 pF, 50 V	70-138168
C822	U	6 pF, 50 V	70-138210
C823	U	100 pF, 50 V	70-138175
C824	U	1 pF, 50 V	70-138174
C825	U	4800 pF, 50 V	70-138163
C826	U	330 pF, 50 V	70-138228
C827	U	330 pF, 50 V	70-138228
C828	U	330 pF, 50 V	70-138228
C829	U	100 pF, 50 V	70-138175
C830	U	1 pF, 50 V	70-138174
C831	U	1000 pF, 50 V	70-138170
C832	U	10000 pF, 50 V	70-138168
C834	U	10000 pF, 50 V	70-138168

REF. NO.	LOC	DESCRIPTION	PART NO.
		CERAMIC CAPACITORS (Continued)	
C836	U	330 pF, 50 V	70-138228
C837	U	10000 pF, 50 V	70-138168
C838	U	10000 pF, 50 V	70-138168
C839	U	1000 pF, 50 V	70-138170
C840	U	10000 pF, 50 V	70-138168
C841	U	1000 pF, 50 V	70-138170
C843	U	10000 pF, 50 V	70-138168
C845	U	1000 pF, 50 V	70-138170
C846	U	1000 pF, 50 V	70-138170
		METAL CHIP RESISTORS	
R801	U	10 kΩ, 1/10 W	70-144120
R802	U	10 kΩ, 1/10 W	70-144120
R803	U	10 kΩ, 1/10 W	70-144120
R804	U	10 kΩ, 1/10 W	70-144120
R805	U	4.7 kΩ, 1/10 W	70-144123
R806	U	4.7 kΩ, 1/10 W	70-144123
R807	U	4.7 kΩ, 1/10 W	70-144123
R808	U	4.7 kΩ, 1/10 W	70-144123
R809	U	2.2 kΩ, 1/10 W	70-144113
R810	U	2.2 kΩ, 1/10 W	70-144113
R811	U	2.2 kΩ, 1/10 W	70-144113
R812	U	2.2 kΩ, 1/10 W	70-144113
R813	U	4.7 kΩ, 1/10 W	70-144123
R814	U	4.7 kΩ, 1/10 W	70-144123
R815	U	4.7 kΩ, 1/10 W	70-144123
R817	U	2.2 kΩ, 1/10 W	70-144113
R818	U	1 kΩ, 1/10 W	70-144125
R819	U	10 Ω, 1/10 W	70-144115
R820	U	47 Ω, 1/10 W	70-144130
R821	U	6.8 kΩ, 1/10 W	70-144158
R822	U	56 Ω, 1/10 W	70-145142
R823	U	820 Ω, 1/10 W	70-144165
R824	U	4.7 kΩ, 1/10 W	70-144123
R825	U	120 Ω, 1/10 W	70-144166
R826	U	180 Ω, 1/10 W	70-144153
R827	U	180 Ω, 1/10 W	70-144124
R828	U	2.2 kΩ, 1/10 W	70-144113
R829	U	270 Ω, 1/8 W	70-144014
R830	U	680 Ω, 1/8 W	70-144157
R831	U	1 kΩ, 1/10 W	70-144125
R832	U	22 kΩ, 1/10 W	70-144121
R833	U	22 kΩ, 1/10 W	70-144121
R834	U	18 Ω, 1/10 W	70-144171
R835	U	270 Ω, 1/10 W	70-144116
R836	U	270 Ω, 1/10 W	70-144116
R837	U	18 Ω, 1/10 W	70-144171
R838	U	18 Ω, 1/10 W	70-144171
R839	U	1.2 kΩ, 1/10 W	70-144167
R840	U	1.2 kΩ, 1/10 W	70-144167
R841	U	1.2 kΩ, 1/10 W	70-144167
R842	U	1.2 kΩ, 1/10 W	70-144167
R843	U	2.2 kΩ, 1/10 W	70-144113
R844	U	15 Ω, 1/10 W	70-144182
R845	U	22 Ω, 1/10 W	70-144170
R846	U	6.8 kΩ, 1/10 W	70-144158
R847	U	10 kΩ, 1/10 W	70-144120
R848	U	10 kΩ, 1/10 W	70-144120
R849	U	10 kΩ, 1/10 W	70-144120
R850	U	10 kΩ, 1/10 W	70-144120
R851	U	10 kΩ, 1/10 W	70-144120
R852	U	10 kΩ, 1/10 W	70-144120
R853	U	10 kΩ, 1/10 W	70-144120
R854	U	10 kΩ, 1/10 W	70-144120
R855	U	0 Ω, 1/10 W	70-144108
R856	U	0 Ω, 1/10 W	70-144108
R857	U	0 Ω, 1/10 W	70-144108
R858	U	0 Ω, 1/10 W	70-144108
R859	U	220 Ω, 1/10 W	70-145131
R860	U	220 Ω, 1/10 W	70-145131
R916	U	2.2 kΩ, 1/10 W	70-144113

MXR-401 MIXER BOARD

A = A-Band B = B-Band T = Topside U = Underside

REF. NO.	LOC	DESCRIPTION	PART NO.
MXR-401 A		ENTIRE ASSEMBLY	70-075287
MXR-401 B		ENTIRE ASSEMBLY	70-075341
		MISCELLANEOUS	
		CAVITY	70-090103
		INTEGRATED CIRCUITS	
IC211	T	CB303M4	70-078453
		TRANSISTORS	
Q211	T	2SC3355	70-080280
Q212	U	2SC2619FB	70-080281
Q213	T	2SC3355	70-080280
Q214	T	2SC3355	70-080280
		COILS AND INDUCTORS	
FB211	T	BL02RN1-R62	70-090122
FB212	T	BL02RN1-R62	70-090122
L211 A	T	7.5T COIL	70-090300
L211 B	T	7T COIL	70-090301
L212 A	T	7.5T COIL	70-090300
L212 B	T	7T COIL	70-090301
L213 A	T	7.5T COIL	70-090300
L213 B	T	7T COIL	70-090301
L214 A	T	7.5T COIL	70-090300
L214 B	T	7T COIL	70-090301
L215	T	ELE-V R68 MA INDUCTOR	70-178080
L216	T	ELE-V 4R7 KA INDUCTOR	70-178083
L217	T	ELE-V 1R5 MA INDUCTOR	70-090352
		PLUGS AND CONNECTORS	
P211		PLUG MXR IN	70-159406
P212		PLUG LO IN	70-159406
J211		JACK RF TO MXR	70-159089
J212		JACK LO IN	70-159089
J213		JACK MIXR OUT	70-159089

REF. NO.	LOC	DESCRIPTION	PART NO.
		ELECTROLYTIC CAPACITORS	
C217	T	22 µF, 50 V	70-135143
		CERAMIC CHIP CAPACITORS	
C211	U	150 pF, 50 V	70-131455
C212	U	330 pF, 50 V	70-138228
C213	U	100 pF, 50 V	70-138175
C214	U	330 pF, 50 V	70-138228
C215	U	330 pF, 50 V	70-138228
C218	U	330 pF, 50 V	70-138228
C219	U	10000 pF, 50 V	70-138166
C220	U	22000 pF, 25 V	70-138162
C221	U	22000 pF, 25 V	70-138162
C222	U	10000 pF, 50 V	70-138166
C224	U	330 pF, 50 V	70-138228
		METAL CHIP RESISTORS	
R211	U	22 Ω, 1/10 W	70-144170
R213	U	10 Ω, 1/10 W	70-144114
R214	U	1.8 kΩ, 1/10 W	70-144154
R215	U	1 kΩ, 1/10 W	70-144125
R216	U	390 Ω, 1/10 W	70-144161
R217	U	18 Ω, 1/10 W	70-144171
R218	U	270 Ω, 1/10 W	70-144116
R219	U	270 Ω, 1/10 W	70-144116
R220	U	0 Ω, 1/10 W	70-144106
R223	U	22 Ω, 1/10 W	70-144170
R224	U	56 Ω, 1/10 W	70-144142
R225	U	6.8 kΩ, 1/10 W	70-144158
R226	U	56 Ω, 1/10 W	70-144142
R227	U	2.7 kΩ, 1/10 W	70-144159
R229	U	22 Ω, 1/10 W	70-144160
R230	U	51 Ω, 1/10 W	70-144204
R231	U	10 Ω, 1/10 W	70-144115
R232	U	10 Ω, 1/10 W	70-144115

RF-4012 RF AMPLIFER BOARD

A = A-Band B = B-Band T = Topside U = Underside

REF. NO.	LOC	DESCRIPTION	PART NO.
RF-4012 A		ENTIRE ASSEMBLY	70-075297
RF-4012 B		ENTIRE ASSEMBLY	70-075347
		MISCELLANEOUS	
		RESONATOR CAST	70-092102
		CABLE ASSEMBLIES	
CA201		ANT IN CABLE	70-034302
J201		CABLE, RF IN	70-034310
		JACKS AND CONNECTORS	
J202		JACK, RF IN	70-159089
J203		JACK, RF IN	70-159089
J204		JACK, RF IN	70-159089
P201		PLUG, RF IN	70-159401
		TRANSISTORS	
Q201	T	2SC3355	70-080280
Q202	U	2SC2619FB	70-080281
		COILS	
FB201	T	FERRITE BEAD	70-090292
L201 A	T	7.5T COIL	70-090165
L201 B	T	7T COIL	70-090166
L202 A	T	7.5T COIL	70-090165
L202 B	T	7T COIL	70-090166
L203	T	INDUCTOR	70-178080

REF. NO.	LOC	DESCRIPTION	PART NO.
		DIODES	
D201	T	MC301	70-085077
D202	T	MC301	70-085077
		ELECTROLYTIC CAPACITORS	
C207	T	22 µF, 50 V	70-135143
		CERAMIC CHIP CAPACITORS	
C201	U	100 pF, 50 V	70-138175
C202	U	330 pF, 50 V	70-138228
C203	U	100 pF, 50 V	70-138175
C204	U	330 pF, 50 V	70-138228
C205	U	330 pF, 50 V	70-138228
C206	U	330 pF, 50 V	70-138228
		METAL CHIP RESISTORS	
R201	U	220 Ω, 1/10 W	70-144180
R202	U	270 Ω, 1/10 W	70-144014
R203	U	10 Ω, 1/10 W	70-144015
R204	U	1.8 kΩ, 1/10 W	70-144154
R205	U	1 kΩ, 1/10 W	70-144125
R206	U	390 Ω, 1/10 W	70-144161
R207	U	270 Ω, 1/10 W	70-144014
R208	U	22 Ω, 1/10 W	70-144160
R209	U	51 Ω, 1/10 W	70-144204
R210	U	0 Ω, 1/10 W	70-144106

RF-4012 P (71-7600) RF AMPLIFER BOARD WITH PREAMP OPTION

A = A-Band T = Topside
B = B-Band U = Underside

REF. NO.	LOC	DESCRIPTION	PART NO.
RF-4012 P A		ENTIRE ASSEMBLY	70-075297
RF-4012 P B		ENTIRE ASSEMBLY	70-075347
		MISCELLANEOUS	
		RESONATOR CAST	70-092102
		CABLE ASSEMBLIES	
CA201		ANT IN CABLE	70-034302
J201		CABLE, RF IN	70-034310
		JACKS AND CONNECTORS	
J204		JACK, RF IN	70-159089
P201		PLUG, RF IN	70-159401
		TRANSISTORS	
Q201	T	2SC3355	70-080260
Q202	U	2SC2619FB	70-080261
Q203	T	2SC3355	70-080260
Q601	T	2SC3355	70-080260
Q602	U	2SC2619FB	70-080261
		DIODES	
D201	T	MC301	70-085077
D202	T	MC301	70-085077
D601	T	MC301	70-085077
D602	T	MC301	70-085077
		COILS	
FB201	T	BL02RN1-R62	70-090122
FB601	T	BL02RN1-R62	70-090122
L201 A	T	7.5T COIL	70-090165
L201 B	T	7T COIL	70-090166
L202 A	T	7.5T COIL	70-090165
L202 B	T	7T COIL	70-090166
L203	T	ELE-V R68MA INDUCTOR	70-178080
L204	T	ELE-V 1R5MA INDUCTOR	70-090352
L601 A	T	7.5T COIL	70-090165
L601 B	T	7T COIL	70-090166
		COILS AND INDUCTORS	
L602 A	T	7.5T COIL	70-090165
L602 B	T	7T COIL	70-090166
L603	T	ELE-V R68MA INDUCTOR	70-178080
		ELECTROLYTIC CAPACITORS	
C207	T	22 µF, 50 V	70-135143
		CERAMIC CHIP CAPACITORS	
C201	U	100 pF, 50 V	70-138175
C202	U	330 pF, 50 V	70-138228
C203	U	100 pF, 50 V	70-138175
C204	U	330 pF, 50 V	70-138228
C205	U	330 pF, 50 V	70-138228
C206	U	330 pF, 50 V	70-138228
C209	U	1000 pF, 50 V	70-138170
C210	U	330 pF, 50 V	70-138228
C601	U	100 pF, 50 V	70-138175
C602	U	330 pF, 50 V	70-138228
C603	U	100 pF, 50 V	70-138175
C604	U	330 pF, 50 V	70-138228
C605	U	330 pF, 50 V	70-138228
		METAL CHIP RESISTORS	
R201	U	220 Ω, 1/10 W	70-144160
R203	U	10 Ω, 1/10 W	70-144115
R204	U	1.8 kΩ, 1/10 W	70-144360
R205	U	1 kΩ, 1/10 W	70-144125
R206	U	360 Ω, 1/10 W	70-144161
R207	U	270 Ω, 1/10 W	70-144116
R208	U	22 Ω, 1/10 W	70-144160
R209	U	51 Ω, 1/10 W	70-144204
R210	U	0 Ω, 1/10 W	70-144106
R601	U	22 Ω, 1/10 W	70-144160
R602	U	270 Ω, 1/10 W	70-144014
R603	U	10 Ω, 1/10 W	70-144115
R604	U	2.2 kΩ, 1/10 W	70-145135
R605	U	1 kΩ, 1/10 W	70-144125
R606	U	360 Ω, 1/10 W	70-144161

Z-444 CONNECTOR BOARD

T = Topside

REF. NO.	LOC	DESCRIPTION	PART NO.
Z-444		ENTIRE ASSEMBLY	70-075291
		JACKS AND CONNECTORS	
J490	T	PCB INTERCONNECT	70-159404
J491	T	PCB INTERCONNECT	70-159404
		MISCELLANEOUS	
	T	GROUND SPRING	70-152091
		CERAMIC CAPACITORS	
C491	T	1000 pF, 50 V	7-0138170
C492	T	1000 pF, 50 V	7-0138170
C493	T	1000 pF, 50 V	7-0138170
C494	T	1000 pF, 50 V	7-0138170
C495	T	1000 pF, 50 V	7-0138170
C496	T	1000 pF, 50 V	7-0138170
C497	T	1000 pF, 50 V	7-0138170
C498	T	1000 pF, 50 V	7-0138170

NOTES

SECTION 5

71-5300 50 WATT POWER AMPLIFIER

NOTES

CIRCUIT DESCRIPTION

The 71-5300 Power Amplifier is contained in its independent chassis and heatsink. It is driven by 5 Watts of modulated RF signal from the 71-5051 Transmitter, which is connected by a special length 50-ohm coaxial cable. Its output power level is adjustable from 30 to 50 Watts of continuous transmission.

RF AMPLIFIERS

Q5101 and Q5121 comprise a parallel amplifier that produces at least 50 Watts of RF power. They are driven by Q5001 which is driven by 71- 5051 Transmitter output. RF power from Q5001 is split by symmetrical PCB stripline to each of the symmetrical power amplifier stages. Q5101 and Q5121 outputs are combined by symmetrical stripline to feed the 50-ohm input of the Harmonic Filter Board Z-455. 50-ohm resistors, R5101 and R5121, absorb power difference due to imbalance between the inputs of the parallel power amplifiers. These resistors will overheat if the imbalance is too great. Similarly, two more 50- ohm resistors, R5103 and R5123, absorb power difference between the outputs of the stages.

HARMONIC FILTER AND DIRECTIONAL COUPLER

A harmonic filter and a directional coupler are contained on the Z-455 Board. The harmonic filter consists of L5201-L5203, C5201-C5203, and C5210. R5203 bleeds off static charges that may otherwise develop on the capacitively-isolated antenna circuit. The directional coupler is constructed of a PCB stripline and thin adjacent coupler loops. Diodes connected to the loops convert coupled RF sample to DC voltage. Because polarity of connections to the loops are opposite, output voltage from one loop and detector diode is relative to forward power while output voltage from the other loop and diode set is relative to reflected power. These power indicating voltages are applied to control circuitry on the PA-438 Board.

APC

Q5302 and Q5303 comprise a differential amplifier that compares forward-power sense voltage at RV5301 to a reference voltage at Q5302- base. Differential amplifier output feeds darlington pair Q5301/Q5304 which series-regulates source current to driver stage Q5001. As forward power increases, Q5303 base voltage increases, Q5302, Q5301 and Q5304 collector currents decrease, Q5001 output decreases, and RF power output of the entire Power Amplifier decreases. This feedback loop holds output power constant at a level established by POWER LEVEL RV5301.

VSWR PROTECTION

The reflected-power sense voltage applies voltage to Q5402 through REFLECTED POWER SENSE LEVEL RV5401. If antenna VSWR reaches a level determined by RV5401 calibration, Q5402 turns on, which turns off Q5403, which triggers a latch comprised of Q5404 and Q5405. Logic high output of the latch biases Q5401, which drops the reference voltage to the APC differential amplifier, thereby shutting down Power Amplifier RF output. RV5401 should be calibrated so that shutdown occurs at 4-to-1 VSWR. Once triggered, the VSWR shutdown circuit will not reset until TX-9V source from the Control Panel drops out.

THERMAL PROTECTION

Thermal shutdown is provided with thermister PTH5501 that increases its terminal voltage with increase in heatsink temperature. When temperature becomes excessive, Q5501 turns on and sinks reference voltage of the APC differential amplifier to shut down the Power Amplifier output.

DE-POWER

When ground is applied to the DE-POWER terminal of P6001 (pin 10), Q5601 turns off, which turns on Q5602. This connects DE-POWER LEVEL RV5601 into the sink current path of the APC differential amplifier reference divider, which reduces Power Amplifier RF output to the level determined by RV5601. De-Power level should be set for 25 Watts.

CURRENT METERING

DC supply feeders to Q5001, Q5101, and Q5121 stages each pass through respective 0.01-ohm resistors. The load side of each resistor is connected to respective metering pins in J5801 and P6001. When a millivolt-meter is connected between a metering pin and DC source at J5801 pin 6, meter deflection represents current flow to each RF amplifier stage to aid Power Amplifier alignment.

DC VOLTAGES

SET-UP: TRANSMIT MODE ON

TRANSISTORS

SYMBOL	TYPE	DC VOLTAGE			FUNCTION
		BASE (GATE)	COLL (DRN)	EMIT (SRC)	
Q5001	2SC3022	0	7.0	0	DRIVER
Q5101	2SC2905	0	13.4	0	FINAL AMPLIFIER
Q5121	2SC2905	0	13.4	0	
Q5301	2SB826	12.9	7.7	13.6	
Q5302	2SC2462	2.1	12.31	.5	POWER CONTROL
Q5303	2SC2462	2.2	8.5	1.6	DIFFERENTIAL AMP.
Q5304	2SA1121	12.3	7.7	12.9	
Q5401	2SC2462	0	2.1	0	
Q5402	2SC2462	0	0.6	0	
Q5403	2SC2462	0.6	0	0	HIGH VSWR SHUT-DOWN
Q5404	2SA1122	8.5	0	8.3	
Q5405	2SC2462	0	8.5	0	
Q5501	2SC2462	0	2.1	0	THERMAL SHUT-DOWN
Q5601	2SC2642	0.7	0	0	DE-POWER
Q5602	2SC2642	0	2.1	0	

ALIGNMENT

TEST EQUIPMENT REQUIRED

Test Instrument	Instrument Capabilities	Use
Thru-line RF Wattmeter	100 watts; 406-470 MHz; 50-ohm circuit	Transmitter power measurements
RF Load Resistor	50-ohm; 250 watts	Antenna dummy load
Digital Multimeter	0.1 to 20 volts DC	Test point measurements and power supply setup

SETUP

1. Connect a resistive, 50-ohm RF load and a wattmeter to Antenna Connector J5201.
2. Preset all variable capacitors to their center position.
3. Preset POWER LEVEL RV5301 to its maximum position (clockwise).
4. Connect an ammeter in series with the positive DC feed line at P6002.
5. Turn on power the Power Supply, then set Control Panel switches as follows:

   CHANNEL for the center-most transmit frequency.
   LOCAL/REMOTE to Local
   DIRECT/REPEAT to Direct
6. Initiate transmit mode from the Control Panel by pressing the hand microphone PTT bar.

RF AMPLIFIER

1. Connect a DC millivoltmeter across R5301.
2. Adjust CV5001 for maximum voltage drop across R5301.
3. Adjust CV5002 for maximum RF output at J5201 (or, if no RF output is present, adjust for a dip in voltage across R5301).
4. Adjust CV5101 and CV5121 for maximum RF output. Repeat.
5. Adjust CV5102 and CV5122 for maximum RF output. Repeat.
6. Repeat steps 2.2 through 2.4.
7. Move the millivoltmeter from R5301 to across R5104.
8. Adjust CV5102 for minimum voltage drop across R5104 while RF output is maximum.
9. Move the millivoltmeter from R5104 to across R5124.
10. Adjust CV5122 for minimum voltage drop across R5124 while RF output is maximum.
11. If the voltages across R5104 and R5123 are more than 10mV apart (equates to one-Ampere maximum difference in DC current to each power amplifier stage), or if RF output power is less than 65 Watts, repeat steps 2.1 through 2.11.
12. Connect a thru-line wattmeter between J114 and J5001. Adjust CV5001 for minimum reflected power.

POWER CONTROL

1. Adjust POWER LEVEL CONTROL RV5301 to obtain 50 Watts output. Total current drain at P6002 must be less than 11 A.

2. Select Low Power Mode by grounding pin 10 of P6001, then adjust LOW POWER LEVEL CONTROL RV5601 to obtain 25 Watts output.

3. Release P6001-pin 10.

4. Connect the positive terminal of an external 12-Volt DC power supply to to pin 1 of J5901 and connect its negative terminal to chassis. Set the DC supply output for 9.00 Volts.

5. Adjust RV5501 to obtain 25 Watts RF output at J5201.

FACTORY PRESET RV5401

RV5401 adjusts the sensitivity of the reflected-power protection circuitry. Accurate alignment requires special equipment not normally available in a service shop. The following procedure provides a means to make an approximate adjustment, if RV5401 alignment has been altered.

1. Connect one lead of a 1000-ohm resistor to pin 2 of J5901 and connect the positive output terminal of an external 12 V DC power supply to the other resistor lead. Connect the power supply negative terminal to pin 5 of J5901. Adjust the external power supply to obtain 1.0 V on pin 2 of J5901.

2. Slowly rotate RV5401 counterclockwise until RF output power shuts down.

3. Disconnect the positive connection of the external DC power supply and remove the 1000-ohm resistor. Turn the base station power supply off, then on again, to reset the Power Amplifer shutdown circuitry.

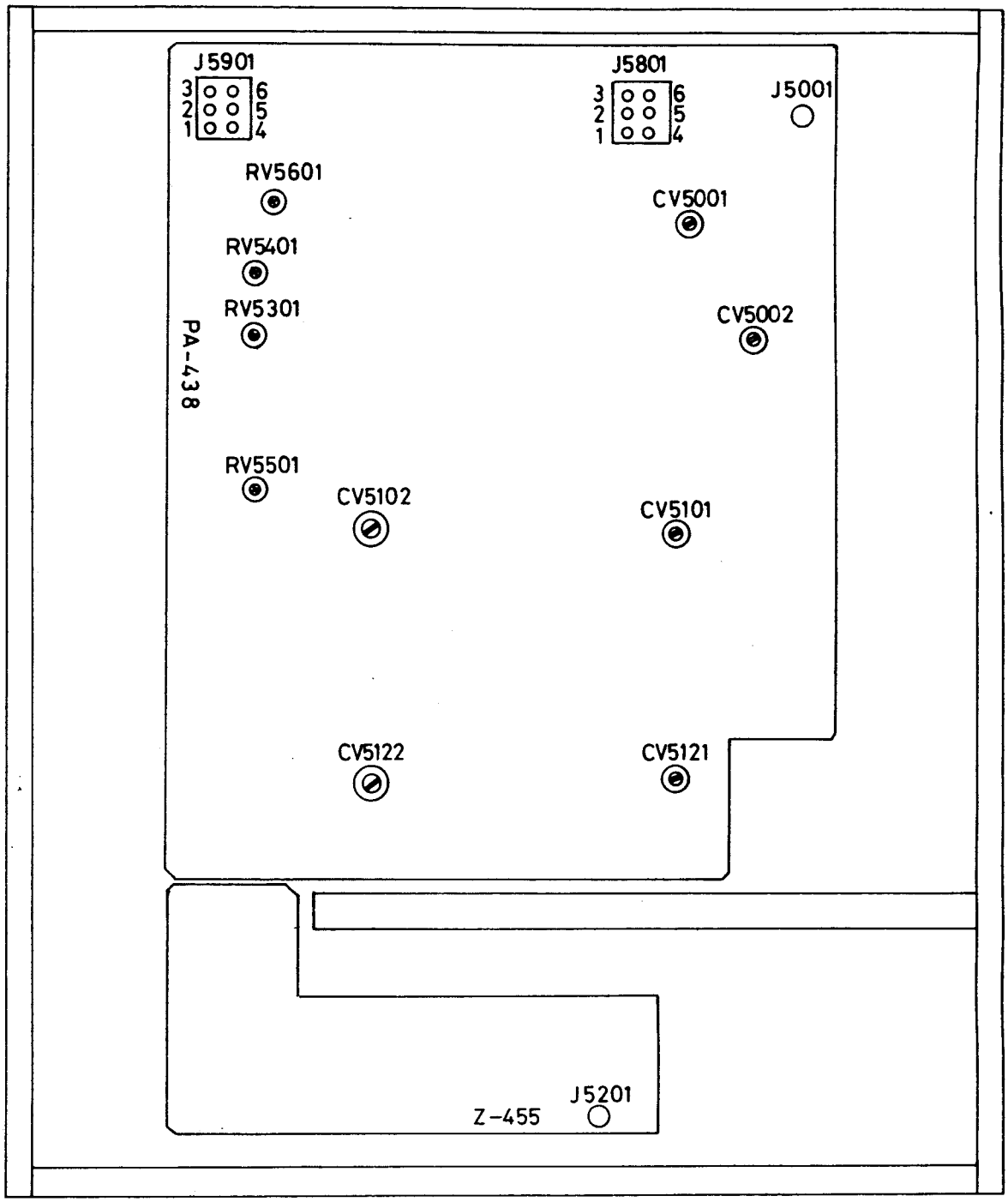

Figure 5 - 1 — Adjustment Map

71-5300 BLOCK DIAGRAM

71-4050/71-4120

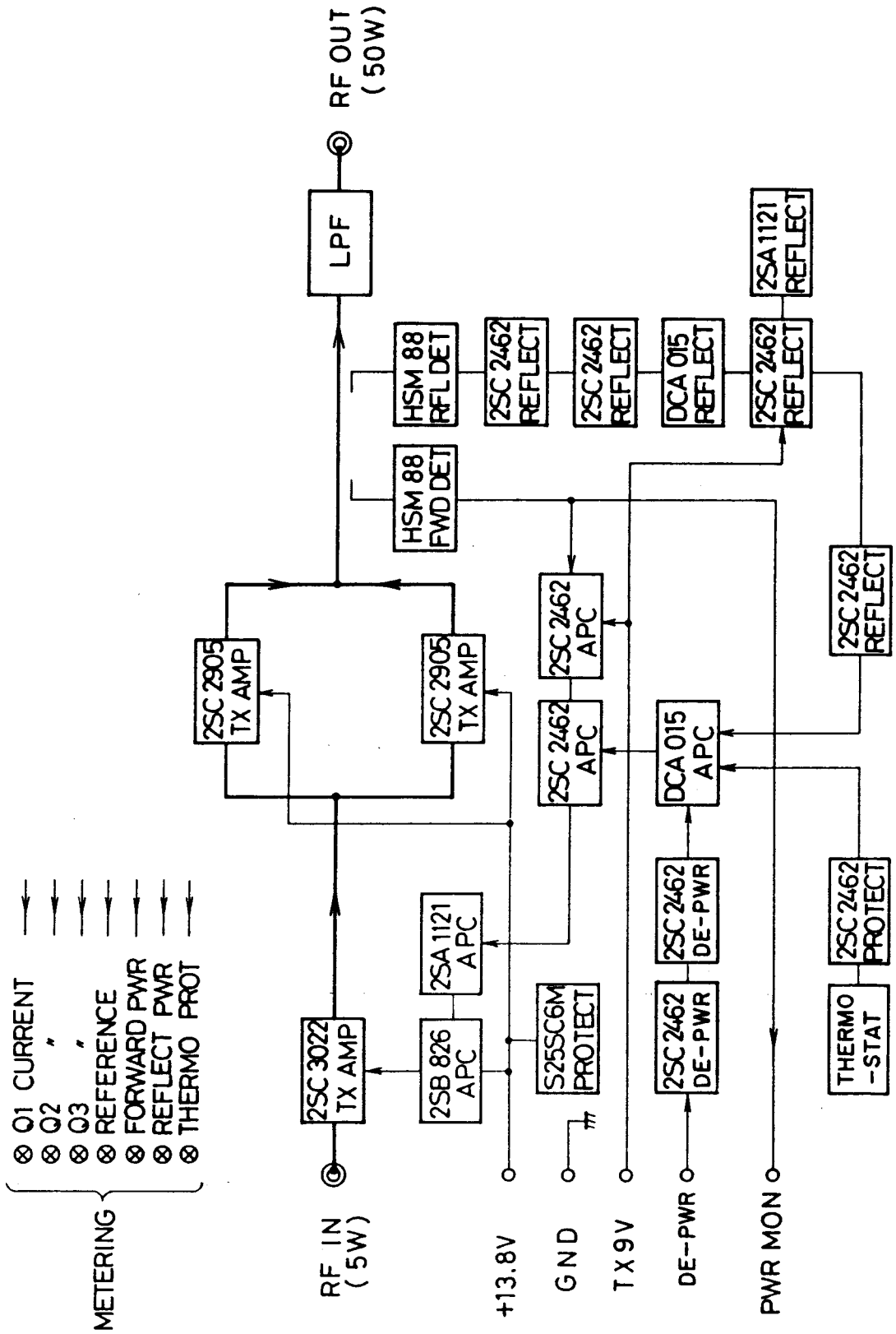

A B C D E F G H I J K L M

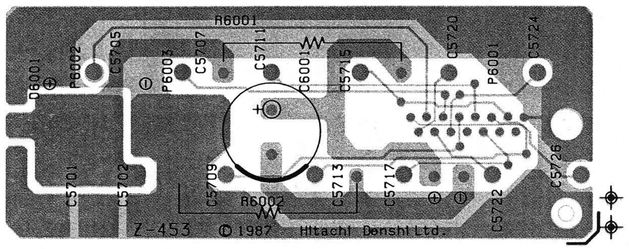

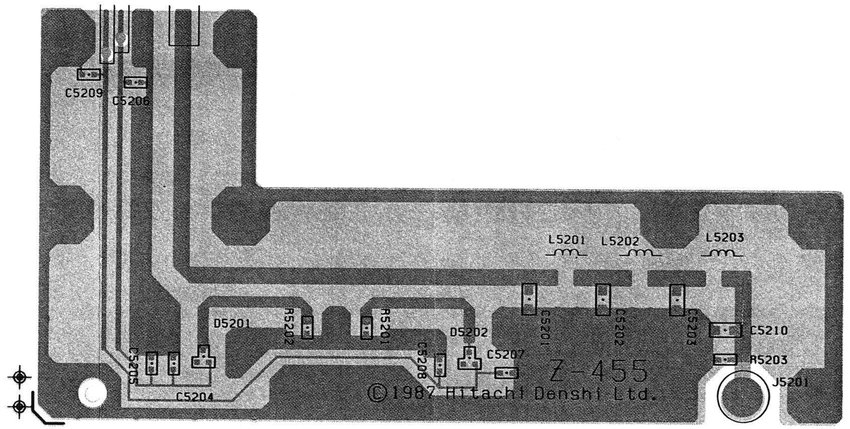

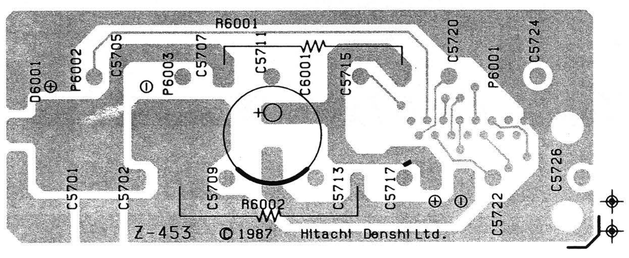

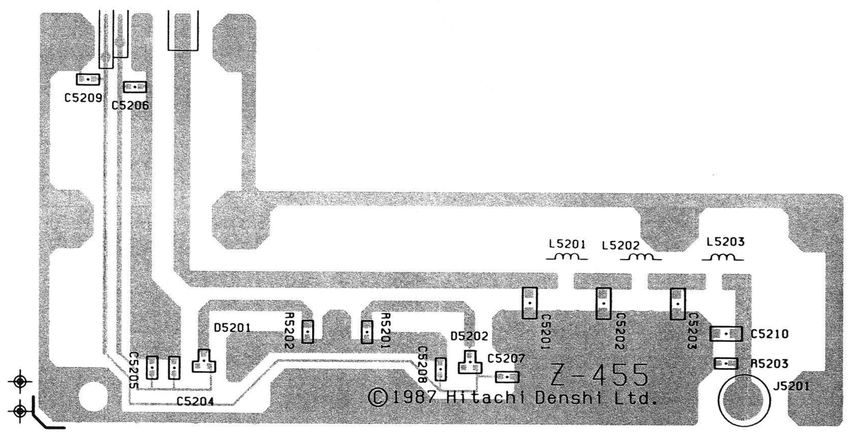

BLUE VISIBLE PLATING

RED UNDERSIDE PLATING

PA-438 LAYOUT

71-4050/71-4120

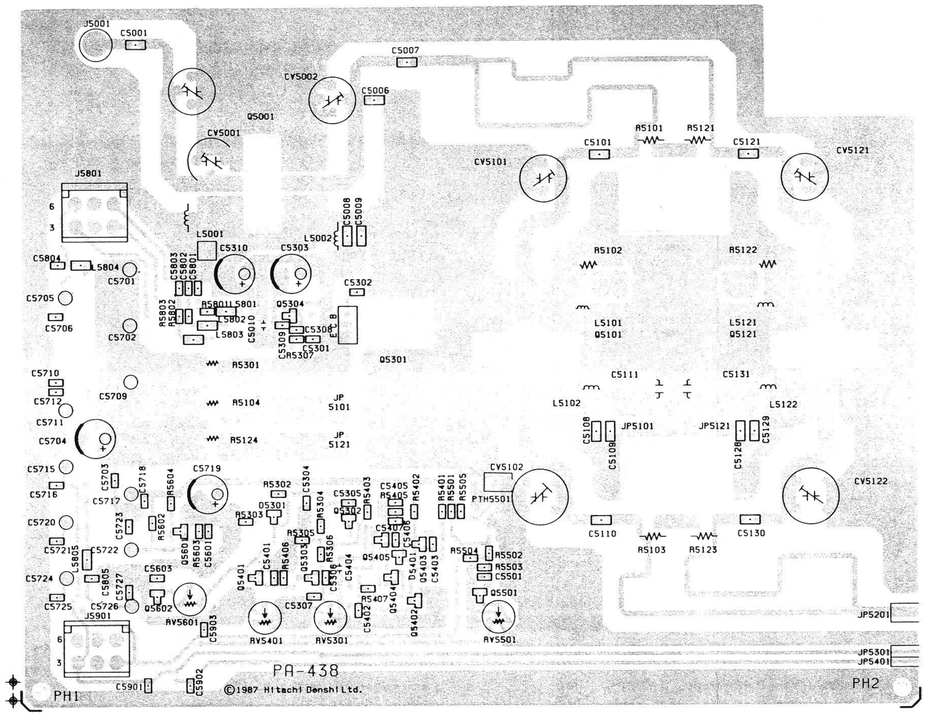

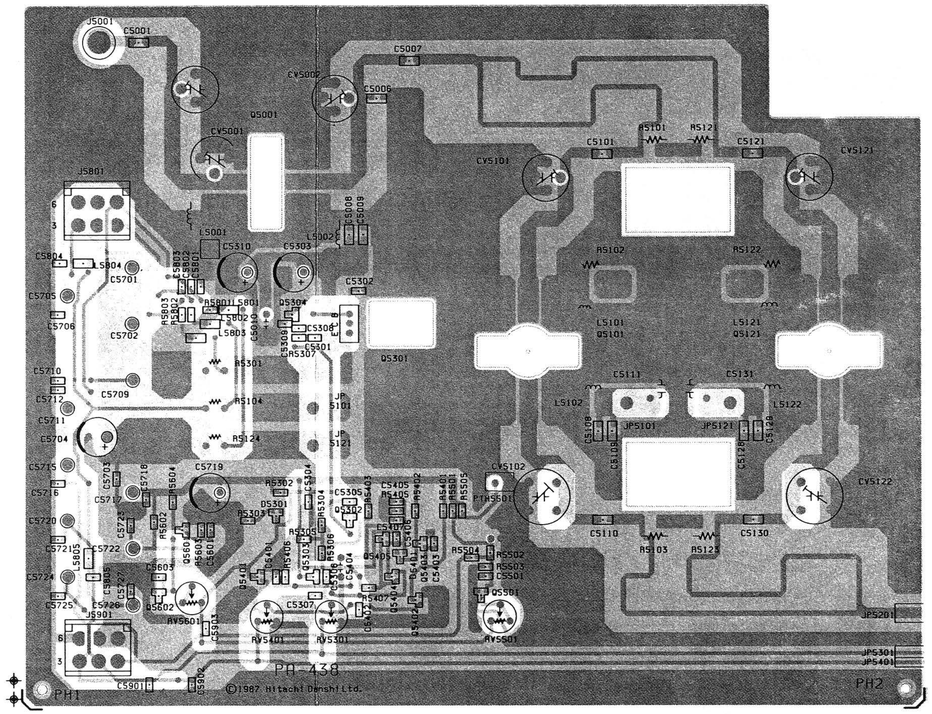

BLUE VISIBLE PLATING

RED UNDERSIDE PLATING

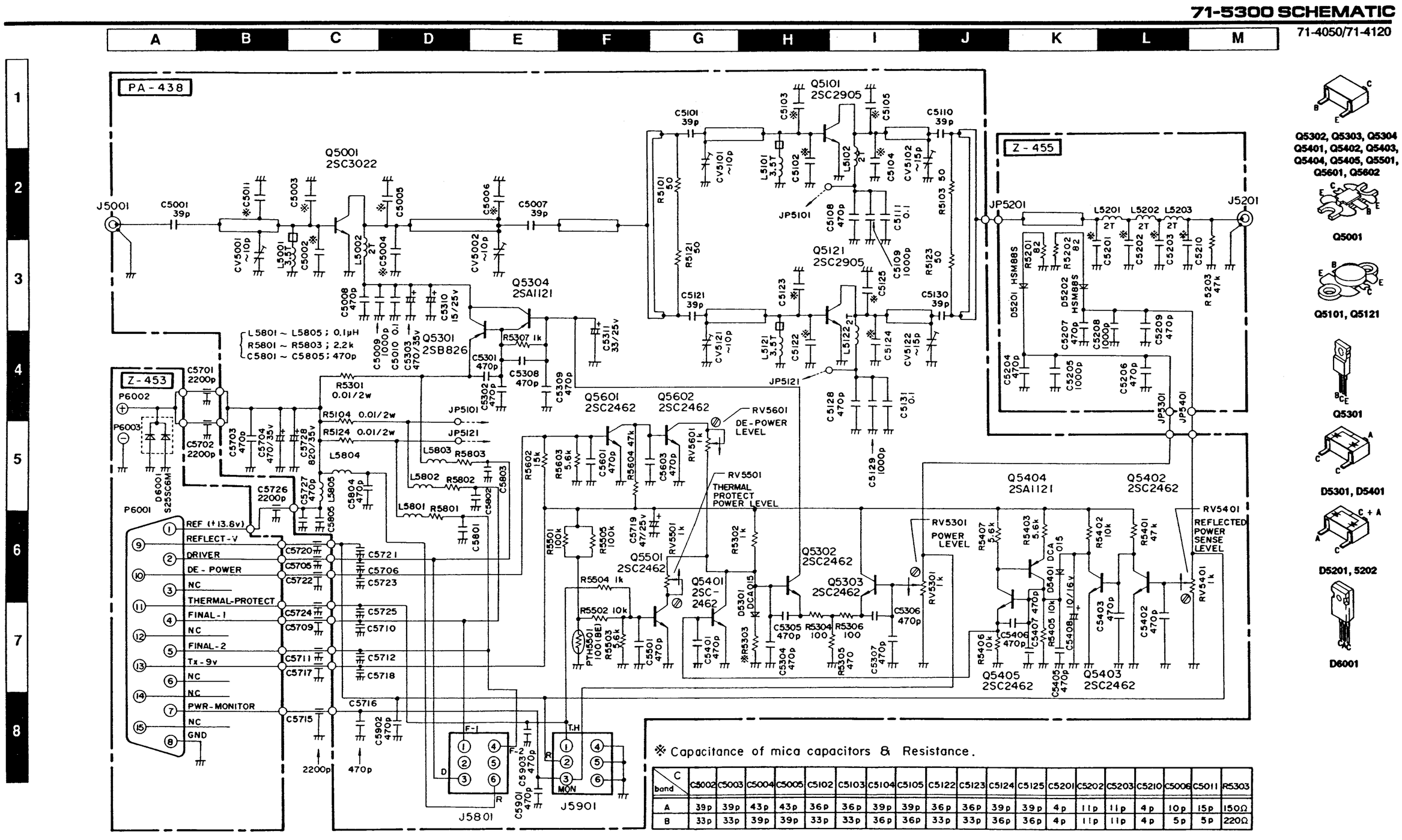

※ Capacitance of mica capacitors & Resistance.

C / band	C5002	C5003	C5004	C5005	C5102	C5103	C5104	C5105	C5122	C5123	C5124	C5125	C5201	C5202	C5203	C5210	C5006	C5011	R5303
A	39p	39p	43p	43p	36p	36p	39p	39p	36p	36p	39p	39p	4p	11p	11p	4p	10p	15p	150Ω
B	33p	33p	39p	39p	33p	33p	36p	36p	33p	33p	36p	36p	4p	11p	11p	4p	5p	5p	220Ω

MECHANICAL PARTS

A = A-Band B = B-Band

REF NO.	DESCRIPTION	PART NO.
1	PA HEATSINK	70-069297
2	SIDE ENCLOSURE	70-010178
3	GROUND STRAP (A)	70-151814
4	GROUND STRAP (B)	70-151815
5	GROUND STRAP (D)	70-151816
6	COVER, PA	70-010179
7	BRACKET	70-158224
101	SCREW M3 x 8	70-151810
102	SCREW M3 x 10	70-151273
103	SCREW M3 x 6	70-151358
104	SCREW M3 x 8	70-151356
105	SCREW M4 x 8	70-151813
	DC POWER CABLE PS-PA	70-034306
	HEX STANDOFF	70-158142
	LOCK STAR WASHER	70-156093
	SCREW	70-151986
G01 A	PA-438 ASSEMBLY	70-075299
G01 B	PA-438 ASSEMBLY	70-075348
G02 A	Z-455 ASSEMBLY	70-075300
G02 B	Z-455 ASSEMBLY	70-075349
G03	Z-453 ASSEMBLY	70-075301
C5701	2200 pF, 50 V FEED-THRU CAP	70-138243
C5702	2200 pF, 50 V FEED-THRU CAP	70-138243
C5704	2200 pF, 50 V FEED-THRU CAP	70-138243
C5705	2200 pF, 50 V FEED-THRU CAP	70-138243
C5709	2200 pF, 50 V FEED-THRU CAP	70-138243
C5711	2200 pF, 50 V FEED-THRU CAP	70-138243
C5715	2200 pF, 50 V FEED-THRU CAP	70-138243
C5717	2200 pF, 50 V FEED-THRU CAP	70-138243
C5720	2200 pF, 50 V FEED-THRU CAP	70-138243
C5722	2200 pF, 50 V FEED-THRU CAP	70-138243
C5724	2200 pF, 50 V FEED-THRU CAP	70-138243
C5726	2200 pF, 50 V FEED-THRU CAP	70-138243

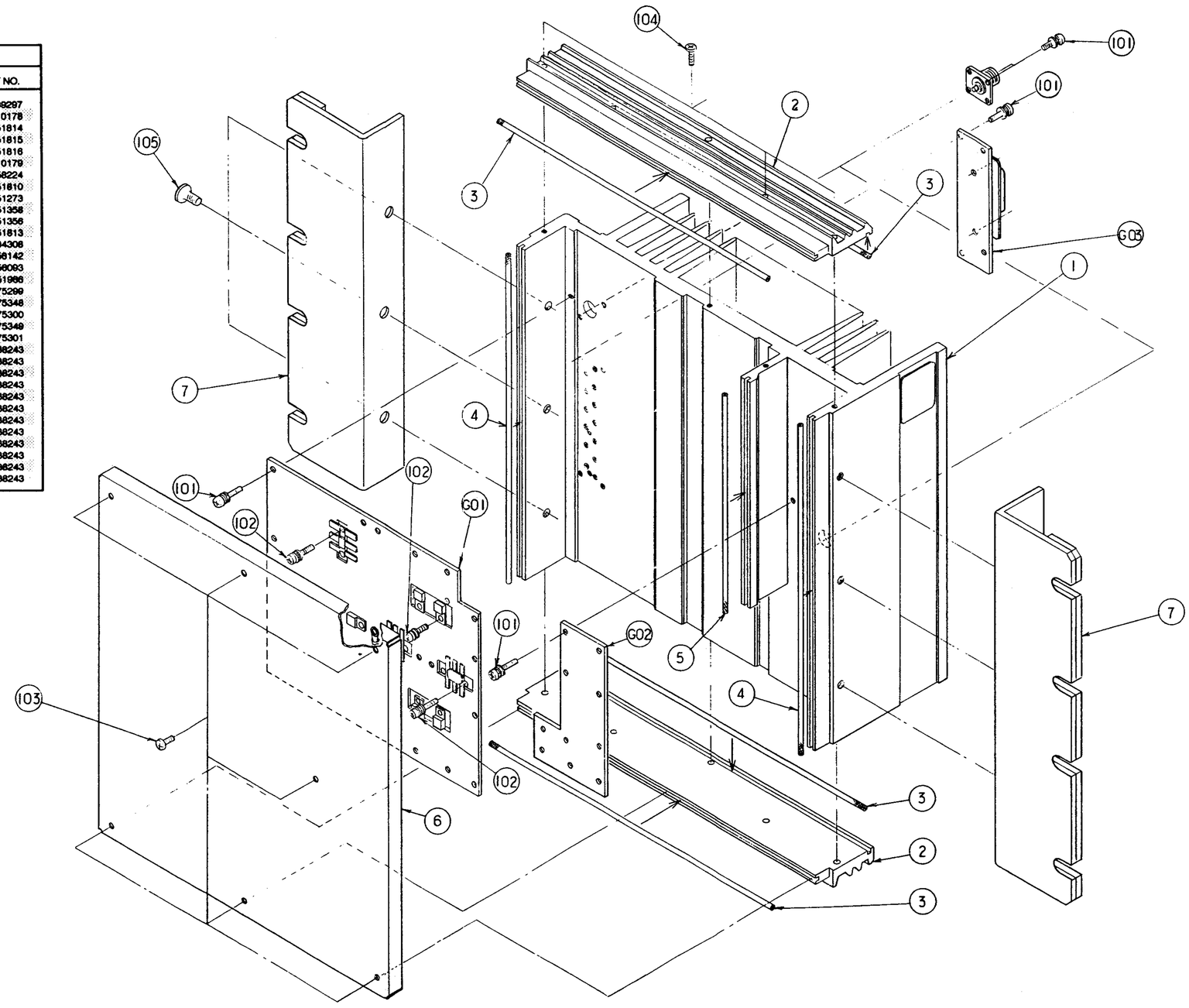

PA-438 AMPLIFIER BOARD

A = A-Band
B = B-Band

REF. NO.	DESCRIPTION	PART NO.
PA-438 A	ENTIRE ASSEMBLY	70-075299
PA-438 B	ENTIRE ASSEMBLY	70-075348
	MISCELLANEOUS	
JP5101	JUMPER STRAP	70-178091
JP5121	JUMPER STRAP	70-178092
PTH5501	PTH487A01BE471TS POSISTER	70-086029
	CONNECTORS	
J5001	JACK, RF IN	70-159408
J5801	350641-1 JACK	70-159465
J5901	350641-1 JACK	70-159465
	TRANSISTORS	
Q5001	2SC3022	70-080140
Q5101	2SC2905	70-080142
Q5121	2SC2905	70-080142
Q5301	2SB626	70-080287
Q5302	2SC2462LC	70-080160
Q5303	2SC2462LC	70-080160
Q5304	2SA1121SC	70-080159
Q5401	2SC2462LC	70-080160
Q5402	2SC2462LC	70-080160
Q5403	2SC2462LC	70-080160
Q5404	2SA1121SC	70-080159
Q5405	2SC2462LC	70-080160
Q5501	2SC2462LC	70-080160
Q5601	2SC2462LC	70-080160
Q5602	2SC2462LC	70-080160
	DIODES	
D5301	DCA015	70-085099
D5401	DCA015	70-085099
	COILS AND INDUCTORS	
	FLAT COIL	70-090310
L5001	1.0C4D3.5T COIL	70-090308
L5002	1.056D2T3P COIL	70-090309
L5101	1.0C4D3.5T COIL	70-090308
L5102	1.056D2T3P COIL	70-090309
L5121	1.0C4D3.5T COIL	70-090308
L5122	1.056D2T3P COIL	70-090309
L5801	MLF 3216A 1ROML COIL	70-090260
L5802	MLF 3216A 1ROML COIL	70-090260
L5803	MLF 3216A 1ROML COIL	70-090260
L5804	MLF 3216A 1ROML COIL	70-090260
L5805	MLF 3216A 1ROML COIL	70-090260
	CONTROLS	
RV5301	1K	70-164040
RV5401	1K	70-164040
RV5501	1K	70-164040
RV5601	1K	70-164040
	VARIABLE CAPACITORS	
CV5001	10 pF, TTC-7	70-123063
CV5002	10 pF, TTC-7	70-123063
CV5101	10 pF, TTC-7	70-123063
CV5102	10 pF, TTC-210EWD	70-123074
CV5121	10 pF, TTC-7	70-123063
CV5122	10 pF, TTC-210EWD	70-123074
	PLASTIC CAPACITORS	
C5010	0.10 µF, 50 V	70-138189
C5111	0.10 µF, 50 V	70-138189
C5131	0.10 µF, 50 V	70-138189

REF. NO.	DESCRIPTION	PART NO.
	ELECTROLYTIC CAPACITORS	
C5303	470 µF, 35 V	70-135152
C5310	15 µF, 25 V	70-135154
C5311	33 µF, 25 V	70-135155
C5719	47 µF, 25 V	70-135157
	MICA CAPACITORS	
C5001	39 pF, 500 V	70-138084
C5002 A	39 pF, 500 V	70-138084
C5002 B	33 pF, 500 V	70-138083
C5003 A	39 pF, 500 V	70-138084
C5003 B	33 pF, 500 V	70-138083
C5004 A	43 pF, 500 V	70-138237
C5004 B	39 pF, 500 V	70-138084
C5005 A	43 pF, 500 V	70-138237
C5005 B	39 pF, 500 V	70-138084
C5006 A	10 pF, 500 V	70-138100
C5006 B	5 pF, 500 V	70-138135
C5007	39 pF, 500 V	70-138084
C5011 A	15 pF, 500 V	70-138080
C5011 B	5 pF, 500 V	70-138135
C5101	39 pF, 500 V	70-138084
C5102 A	36 pF, 500 V	70-138240
C5102 B	33 pF, 500 V	70-138083
C5103 A	36 pF, 500 V	70-138240
C5103 B	33 pF, 500 V	70-138083
C5104 A	39 pF, 500 V	70-138208
C5104 B	36 pF, 500 V	70-138209
C5105 A	39 pF, 500 V	70-138208
C5105 B	36 pF, 500 V	70-138209
C5110	39 pF, 500 V	70-138084
C5121	39 pF, 500 V	70-138084
C5122 A	36 pF, 500 V	70-138240
C5122 B	33 pF, 500 V	70-138083
C5123 A	36 pF, 500 V	70-138240
C5123 B	33 pF, 500 V	70-138083
C5124 A	39 pF, 500 V	70-138208
C5124 B	36 pF, 500 V	70-138209
C5125 A	39 pF, 500 V	70-138208
C5125 B	36 pF, 500 V	70-138209
C5130	39 pF, 500 V	70-138084
	CERAMIC CAPACITORS	
C5008	470 pF, 100 V	70-138238
C5009	1000 pF, 100 V	70-138239
C5108	470 pF, 100 V	70-138238
C5109	1000 pF, 100 V	70-138239
C5128	470 pF, 100 V	70-138238
C5129	1000 pF, 100 V	70-138239
C5301	470 pF, 50 V	70-138195
C5302	470 pF, 50 V	70-138195
C5304	470 pF, 50 V	70-138195
C5305	470 pF, 50 V	70-138195
C5306	470 pF, 50 V	70-138195
C5307	470 pF, 50 V	70-138195
C5308	470 pF, 50 V	70-138195
C5309	470 pF, 50 V	70-138195
C5401	470 pF, 50 V	70-138195
C5402	470 pF, 50 V	70-138195
C5403	470 pF, 50 V	70-138195
C5405	470 pF, 50 V	70-138195
C5406	470 pF, 50 V	70-138195
C5407	470 pF, 50 V	70-138195
C5501	470 pF, 50 V	70-138195
C5601	470 pF, 50 V	70-138195
C5603	470 pF, 50 V	70-138195
C5703	470 pF, 50 V	70-138195
C5708	470 pF, 50 V	70-138195
C5710	470 pF, 50 V	70-138195
C5712	470 pF, 50 V	70-138195
C5716	470 pF, 50 V	70-138195

PA-438 AMPLIFIER BOARD (Continued)

REF. NO.	DESCRIPTION	PART NO.
	CERAMIC CAPACITORS (Continued)	
C5718	470 pF, 50 V	70-138195
C5721	470 pF, 50 V	70-138195
C5723	470 pF, 50 V	70-138195
C5724	470 pF, 50 V	70-138195
C5724	470 pF, 50 V	70-138195
C5725	470 pF, 50 V	70-138195
C5727	470 pF, 50 V	70-138195
C5801	470 pF, 50 V	70-138195
C5802	470 pF, 50 V	70-138195
C5803	470 pF, 50 V	70-138195
C5804	470 pF, 50 V	70-138195
C5805	470 pF, 50 V	70-138195
C5901	470 pF, 50 V	70-138195
C5902	470 pF, 50 V	70-138195
C5903	470 pF, 50 V	70-138195
	WIRE RESISTORS	
R5104	0.01 Ω	70-144209
R5124	0.01 Ω	70-144209
R5301	0.01 Ω	70-144209

REF. NO.	DESCRIPTION	PART NO.
	METAL RESISTORS	
R5101	50 Ω, 1/10 W	70-144175
R5103	50 Ω, 1/10 W	70-144175
R5121	50 Ω, 1/10 W	70-144175
R5123	50 Ω, 1/10 W	70-144175
R5302	1 kΩ, 1/10 W	70-144125
R5303 A	150 Ω, 1/10 W	70-140321
R5303 B	220 Ω, 1/10 W	70-144131
R5304	100 Ω, 1/10 W	70-145146
R5305	470 Ω, 1/10 W	70-144152
R5306	100 Ω, 1/10 W	70-145146
R5307	1 kΩ, 1/10 W	70-144125
R5401	47 kΩ, 1/10 W	70-145145
R5402	10 kΩ, 1/10 W	70-144120
R5403	5.6 kΩ, 1/10 W	70-144168
R5405	10 kΩ, 1/10 W	70-144120
R5406	10 kΩ, 1/10 W	70-144120
R5407	5.6 kΩ, 1/10 W	70-144168
R5501	100 kΩ, 1/10 W	70-145128
R5502	10 kΩ, 1/10 W	70-144120
R5503	5.6 kΩ, 1/10 W	70-144168
R5504	100 kΩ, 1/10 W	70-145128
R5505	100 kΩ, 1/10 W	70-145128
R5602	15 kΩ, 1/10 W	70-144122
R5603	5.6 kΩ, 1/10 W	70-144168
R5801	2.2 kΩ, 1/10 W	70-144113
R5802	2.2 kΩ, 1/10 W	70-144113
R5803	2.2 kΩ, 1/10 W	70-144113

Z-455 FILTER BOARD

REF. NO.	DESCRIPTION	PART NO.
Z-455	ENTIRE ASSEMBLY	70-075300
	JACKS AND CONNECTORS	
J5201	LPF IN JACK	70-159409
	DIODES	
D5201	HSM88S	70-085154
D5202	HSM88S	70-085154
	COILS AND CONDUCTORS	
L5201	1.5S5D2T2P COIL	70-090311
L5202	1.5S5D2T2P COIL	70-090311
L5203	1.5S5D2T2P COIL	70-090311
	MICA CAPACITORS	
C5201	4 pF, 500 V	70-138124
C5202	11 pF, 500 V	70-138244
C5203	11 pF, 500 V	70-138244
C5210	4 pF, 500 V	70-138124
	CERAMIC CAPACITORS	
C5205	1000 pF, 50 V	70-138170
C5206	470 pF, 50 V	70-138195
C5208	1000 pF, 50 V	70-138170
	METAL RESISTORS	
R5201	82 Ω, 1/10 W	70-144172
R5202	82 Ω, 1/10 W	70-144172
R5203	47 kΩ, 1/10 W	70-146145

Z-453 CONNECTOR BOARD

REF. NO.	DESCRIPTION	PART NO.
Z-453	ENTIRE ASSEMBLY	70-075305
	DIODES	
D6001	S25SC6M	70-085231
	ALUMINUM ELECTROLYTIC CAPACITORS	
C6001	2000 µF, 35 V	70-135158
	METAL RESISTORS	
R6001	2.7 Ω	70-144177
	JACKS AND CONNECTORS	
P6001	INTERFACE PLUG	70-159409
P6002	POWER SUPPLY + PLUG	70-159410
P6003	POWER SUPPLY - PLUG	70-159410

5

NOTES

SECTION 6

71-5400 120 WATT POWER AMPLIFIER

NOTES

CIRCUIT DESCRIPTION

The 71-5400 Power Amplifier is contained in its independent chassis and heatsink. It is driven by 5 Watts of modulated RF signal from the 71-5051 Transmitter, which is connected by a special-length 50-ohm coaxial cable. Its output power level is adjustable from 90 to 120 Watts of continuous transmission.

RF AMPLIFIERS

Q5101, Q5121, and Q5141 comprise a three-stage parallel amplifier that produces at least 120 Watts of RF power. They are driven by Q5002 which is driven by Q5001. 71-5051 Transmitter output applies RF power to pre-driver Q5001. Driver Q5002 output is split by symmetrical PCB stripline to each of the symmetrical power amplifier stages. Q5101, Q5121, and Q5141 outputs are combined on the Z-456 Combiner Board with stripline. The combiner feeds the 50-ohm input of the Harmonic Filter Board Z-454. 50-ohm resistors, R5101, R5102, and R5103 absorb power differences due to imbalance between the inputs of the parallel power amplifiers. These resistors overheat if the imbalance is too great. Similarly, three more 50-ohm resistors, R5107, R5108, and R5109 absorb power difference between the outputs of the stages.

HARMONIC FILTER AND DIRECTIONAL COUPLER

A harmonic filter and a directional coupler are contained on the Z-454 Board. The harmonic filter consists of L5201-L5203, C5201-C5203, and C5210. R5203 bleeds off static charges that may otherwise develop on the capacitively-isolated antenna circuit. The directional coupler is constructed of a PCB stripline and thin adjacent coupler loops. Diodes connected to the loops (D5201, D5202) convert coupled RF sample to DC voltage. Because polarity of connections to the loops are opposite, output voltage from one loop and detector diode is relative to forward power while output voltage from the other loop and diode set is relative to reflected power. These power indicating voltages are applied to control circuitry on the PA-437 Board.

APC

Q5302 and Q5303 comprise a differential amplifier that compares forward-power sense voltage at RV5301 to a reference voltage at Q5302- base. Differential amplifier output feeds darlington pair Q5301/Q5304 which series-regulates source current to driver stage Q5001. As forward power increases, Q5303 base voltage increases, Q5302, Q5301 and Q5304 collector currents decrease, Q5001 output decreases, and RF power output of the entire Power Amplifier decreases. This feedback loop holds output power constant at a level established by POWER LEVEL RV5301.

VSWR PROTECTION

The reflected-power sense voltage applies voltage to Q5402 through REFLECTED POWER SENSE LEVEL RV5401. If antenna VSWR reaches a level determined by RV5401 calibration, Q5402 turns on, which turns off Q5403, which triggers a latch comprised of Q5404 and Q5405. Logic high output of the latch biases Q5401, which drops the reference voltage to the APC differential amplifier, thereby shutting down Power Amplifier RF output. RV5401 should be calibrated so that shutdown occurs at 4-to-1 VSWR. Once triggered, the VSWR shutdown circuit will not reset until TX-9V source from the Control Panel drops out.

THERMAL PROTECTION

Thermal shutdown is provided with thermistor PTH5501 that increases its terminal voltage with increase in heatsink temperature. When temperature becomes excessive, Q5501 turns on and sinks reference voltage to the APC differential amplifier to shut down the Power Amplifier output.

DE-POWER

When ground is applied to the DE-POWER terminal of P6001 (pin 10), Q5601 turns off, which turns on Q5602. This connects DE-POWER LEVEL RV5601 into the sink current path of the APC differential amplifier reference divider, which reduces Power Amplifier RF output to the level determined by RV5601. De-Power level should be set for 60 Watts.

CURRENT METERING

DC supply feeders to Q5001, Q5002, Q5101, Q5121, and Q5141 stages each pass through respective 0.01-ohm resistors. The load side of each resistor is connected to respective metering pins in J5801 and P6001. When a millivolt-meter is connected between a metering pin and DC source at J5801 pin 6, meter deflection represents current flow to each RF amplifier stage to aid Power Amplifier alignment.

DC VOLTAGES

SET-UP: TRANSMIT MODE ON

Transistors

SYMBOL	TYPE	DC VOLTAGE BASE (GATE)	DC VOLTAGE COLL (DRN)	DC VOLTAGE EMIT (SRC)	FUNCTION
Q5001	MRF644	0	7.6	0	FIRST DRIVER
Q5002	MRF648	0	13.30		SECOND DRIVER
Q5101	MRF648	0	13.1	0	FINAL AMPLIFIER
Q5121	MRF648	0	13.10		
Q5141	MRF648	0	13.1	0	
Q5301	2SB826	12.5	7.6	13.4	POWER CONTROL DIFFERENTIAL AMP.
Q5302	2SC2462	2.0 1	2.0	1.4	
Q5303	2SC2462	2.4	8.5	1.6	
Q5304	2SA1121	12.0	7.6	12.5	
Q5401	2SC2462	0	2.0	0	HIGH VSWR SHUT-DOWN
Q5402	2SC2462	0	0.6	0	
Q5403	2SC2462	0.6	0	0	
Q5404	2SA1122	8.5	0	8.5	
Q5405	2SC2462	0	8.5	0	
Q5501	2SC2462	0	2.0	0	THERMAL SHUT-DOWN
Q5601	2SC2642	0.7	0	0	DE-POWER
Q5602	2SC2642	0	2.0	0	

71-5400 ALIGNMENT

TEST EQUIPMENT REQUIRED

Test Instrument	Instrument Capabilities	Use
Thru-line RF Wattmeter	200 watts; 406-470 MHz; 50-ohm circuit	Transmitter power measurements
RF Load Resistor	50-ohm; 250 watts	Antenna dummy load
Digital Multimeter	0.1 to 20 V DC	Test point measurements and power supply setup

SETUP

1. Connect a resistive, 50-ohm RF load and a wattmeter to Antenna Connector J5201.
2. Preset all variable capacitors to their center position.
3. Preset POWER LEVEL RV5301 to its maximum position (clockwise).
4. Connect an ammeter in series with the positive DC feed line at P6002.
5. Turn on power the Power Supply, then set Control Panel switches as follows:

   CHANNEL for the center-most transmit frequency.
   LOCAL/REMOTE to Local
   DIRECT/REPEAT to Direct
6. Initiate transmit mode from the Control Panel by pressing the hand microphone PTT bar.

RF AMPLIFIER

1. Connect a DC millivoltmeter across R5301.
2. Adjust CV5001 and CV5004 for maximum voltage drop across R5301. Repeat.
3. Adjust CV5002, CV5005, then CV5006 for maximum RF output at J5201. Repeat.
4. Adjust CV5003, then CV5007 for maximum RF output. Repeat.
5. Adjust CV5101, CV5121, and CV5141 for maximum RF output. Repeat.
6. Adjust CV5102, then CV5103 for maximum RF output. Repeat.
7. Adjust CV5122, then CV5123 for maximum RF output. Repeat.
8. Adjust CV5142, then CV5143 for maximum RF output. Repeat.
9. Repeat steps 2 through 5.
10. Move the millivoltmeter from R5301 to across R5104.
11. Adjust CV5102 and CV5103 for minimum voltage drop across R5104 while RF output is maximum.
12. Move the millivoltmeter from R5104 to across R5105.
13. Adjust CV5122 and CV5123 for minimum voltage drop across R5105 while RF output is maximum.
14. Move the milli-voltmeter from R5105 to across R5106.
15. Adjust CV5142 and CV5143 for minimum voltage drop across R5106 while RF output is maximum.
16. If any one of the voltages across R5104, R5105, and R5106 is more than 10 mV from another (equates to one-Ampere maximum difference in DC current to each power amplifier stage), or if RF output power is less than 140 Watts, repeat steps 1 through 16.

17. Connect a thru-line wattmeter between J114 and J5001. Adjust CV5001 for minimum reflected power.

18. Adjust POWER LEVEL CONTROL RV5301 to obtain 120 Watts output. Total current drain at P6002 must be less than 30 Amperes.

19. Select Low Power Mode by grounding pin 10 of P6001, then adjust LOW POWER LEVEL CONTROL RV5601 to obtain 60 Watts output.

20. Release P6001-pin 10.

21. Connect the positive terminal of an external 12-Volt DC power supply to to pin 1 of J5901 and connect its negative terminal to chassis. Set the DC supply output for 9.00 Volts.

22. Adjust RV5501 to obtain 60 Watts RF output at J5201.

FACTORY PRESET RV5401

RV5401 adjusts the sensitivity of the reflected-power protection circuitry. Accurate alignment requires special equipment not normally available in a service shop. The following procedure provides a means to make an approximate adjustment, if RV5401 alignment has been altered.

1. Connect one lead of a 1000-ohm resistor to pin 2 of J5901 and connect the positive output terminal of an external 12-Volt DC power supply to the other resistor lead. Connect the power supply negative terminal to pin 5 of J5901. Adjust the external power supply to obtain 1.0 Volts on pin 2 of J5901.

2. Slowly rotate RV5401 counterclockwise until RF output power shuts down.

3. Disconnect the positive connection of the external DC power supply and remove the 1000-ohm resistor. Turn the base station power supply off, then on again, to reset the Power Amplifier shut-down circuitry.

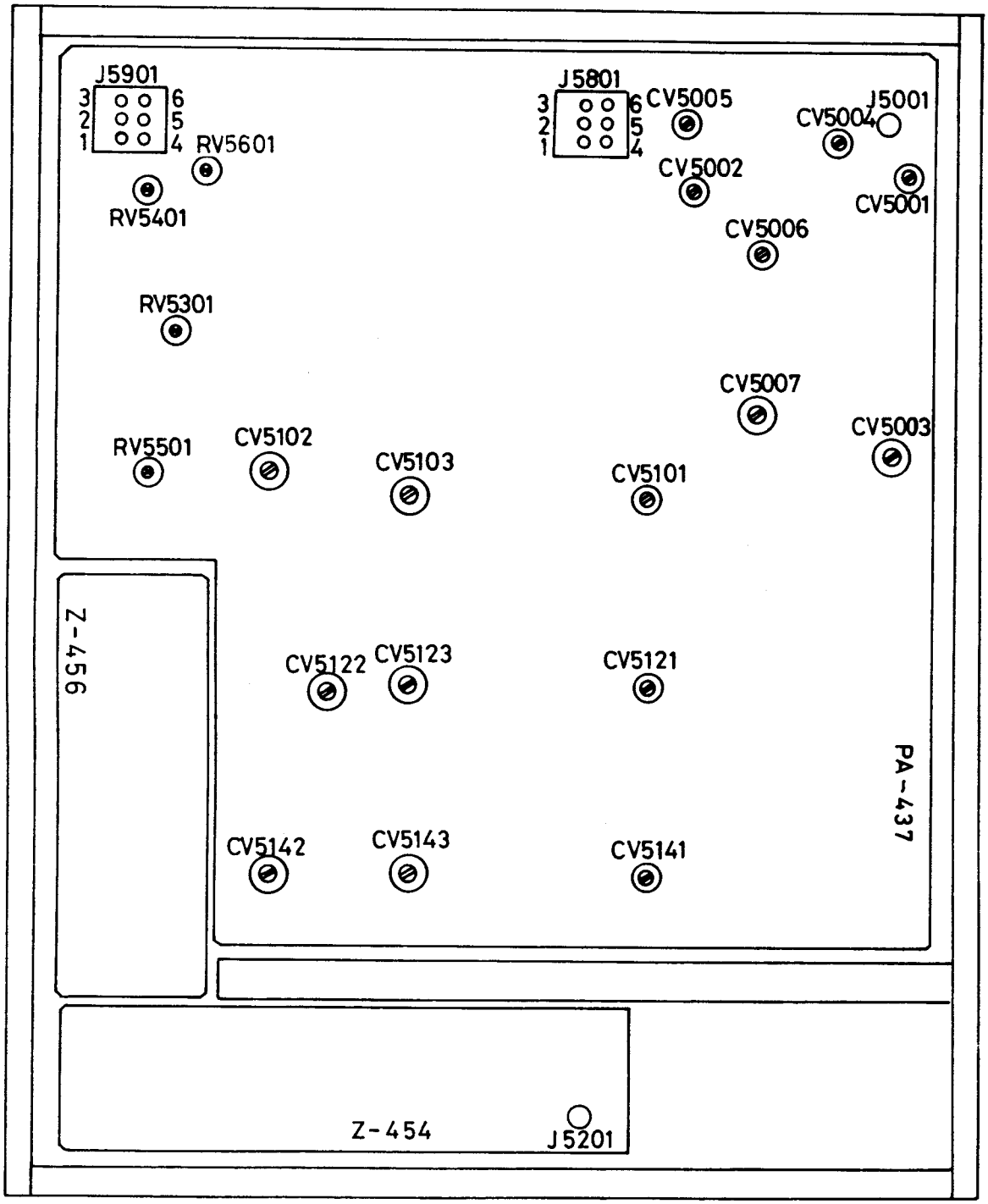

Figure 6 - 1 — Adjustment Map

71-5400 BLOCK DIAGRAM

71-4050/71-4120

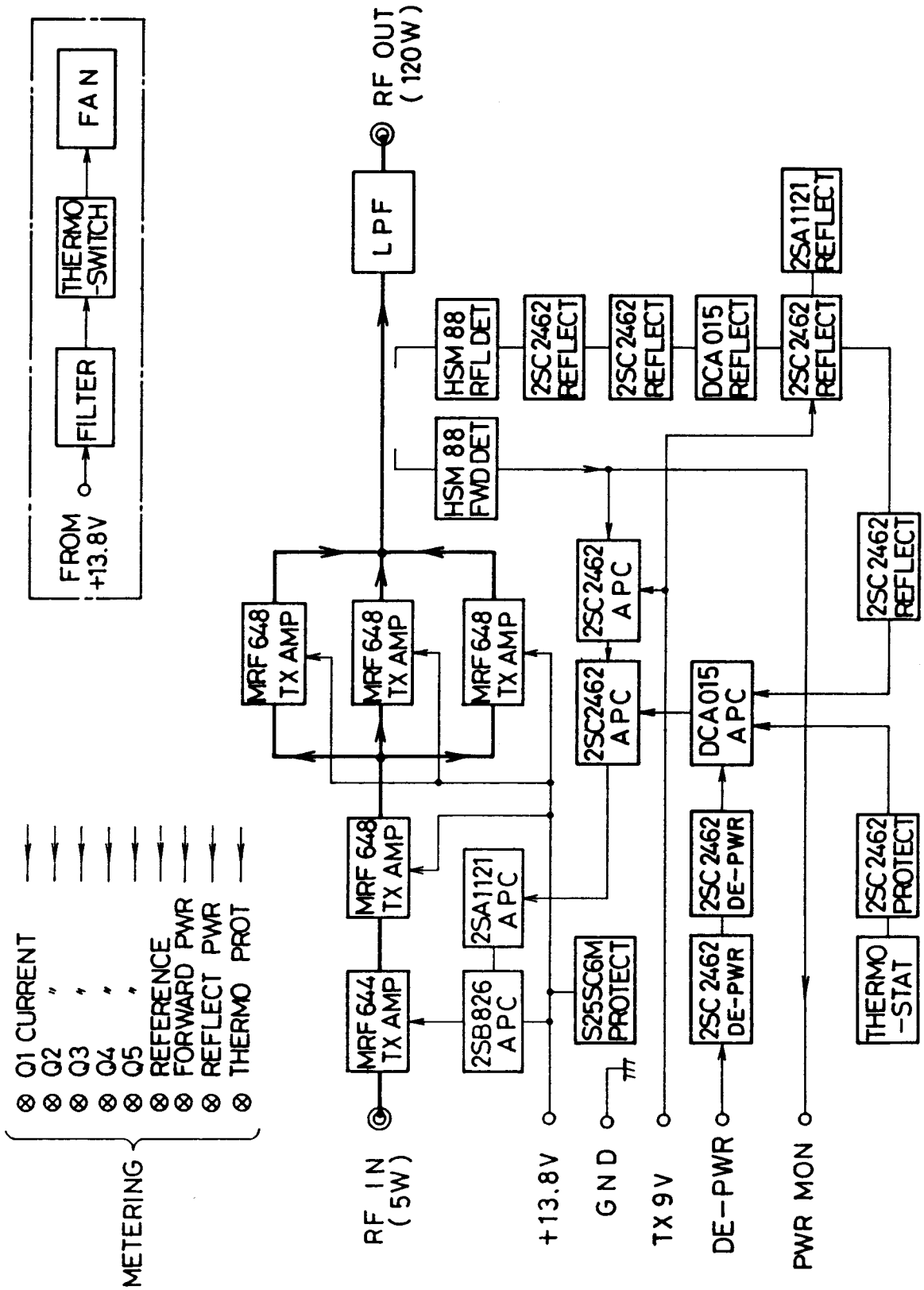

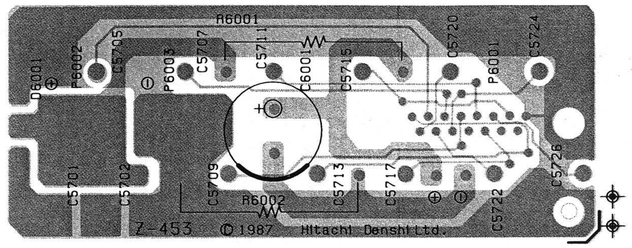

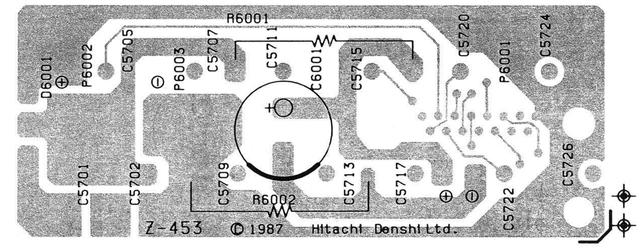

Z-454 LAYOUT

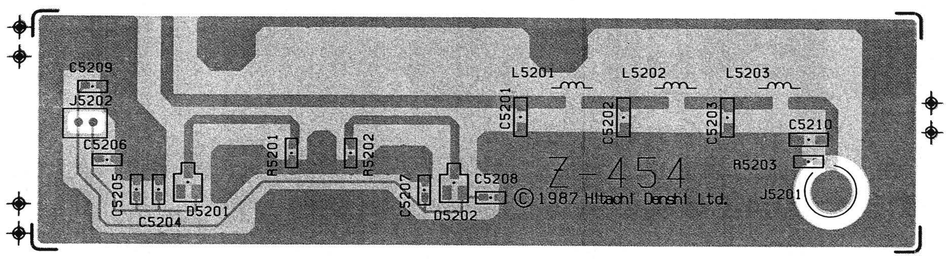

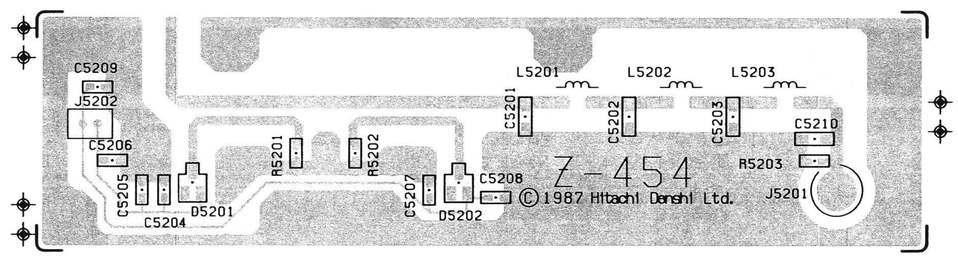

Z-456 LAYOUT

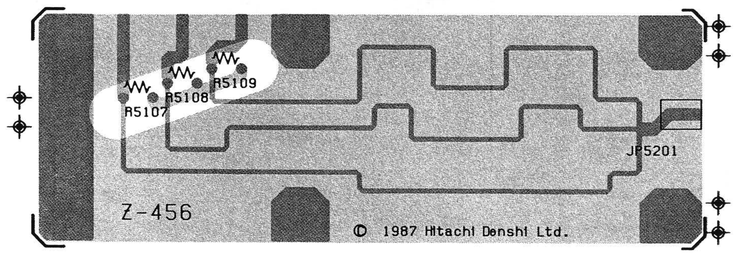

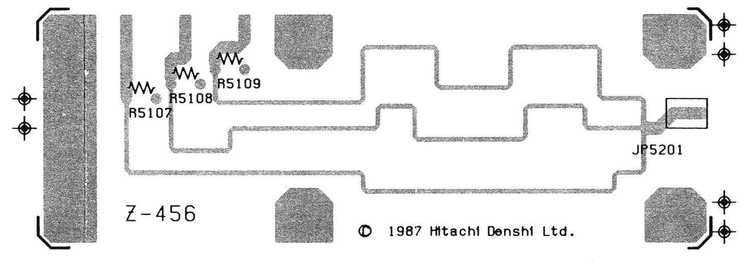

BLUE VISIBLE PLATING

RED UNDERSIDE PLATING

PA-437 LAYOUT

71-4050/71-4120

A	B	C	D	E	F	G	H	I	J	K	L	M

1 2 3 4 5 6 7 8

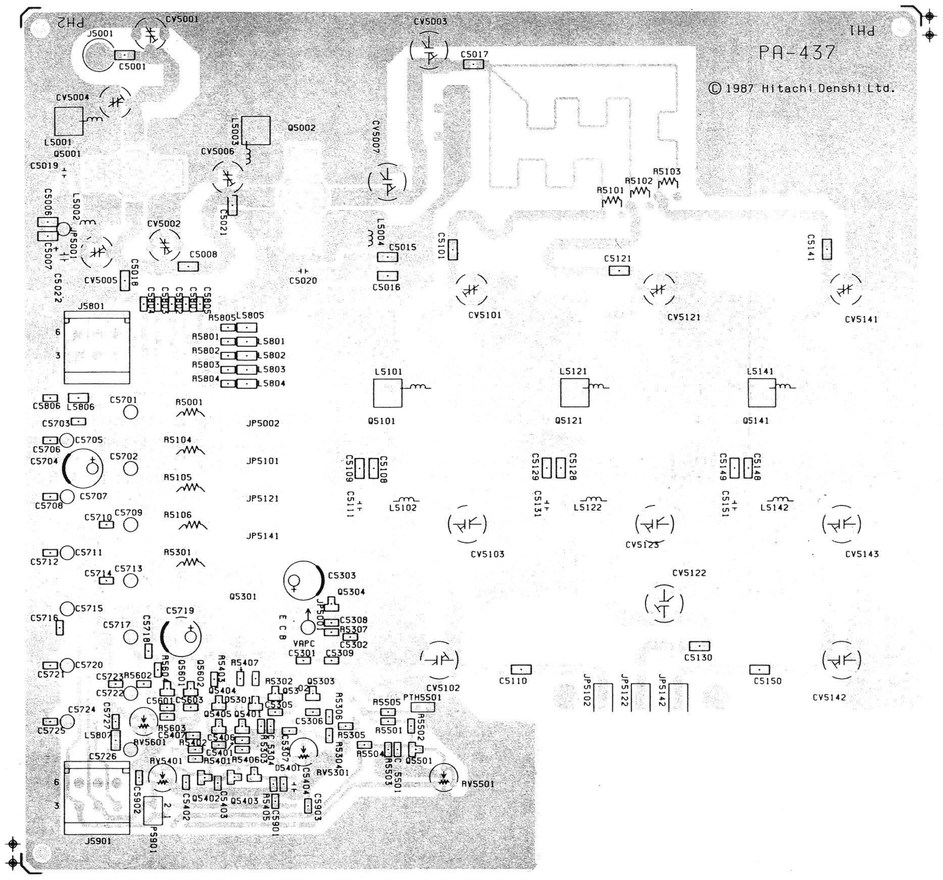

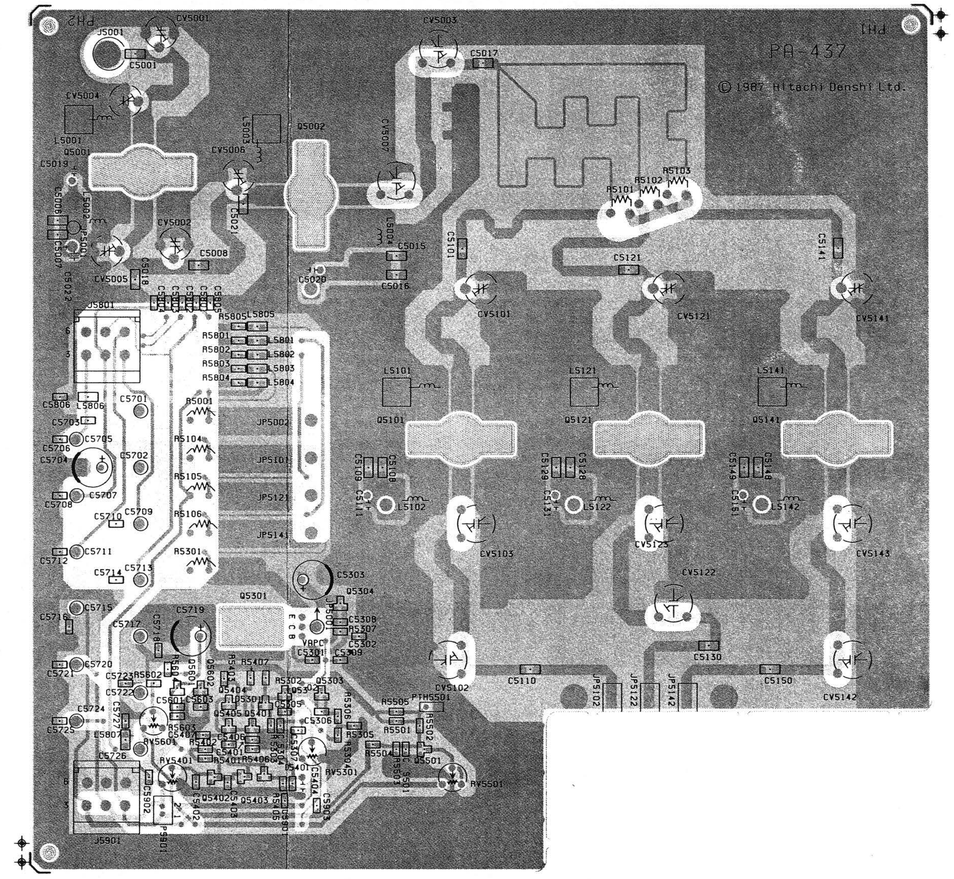

BLUE VISIBLE PLATING

RED UNDERSIDE PLATING

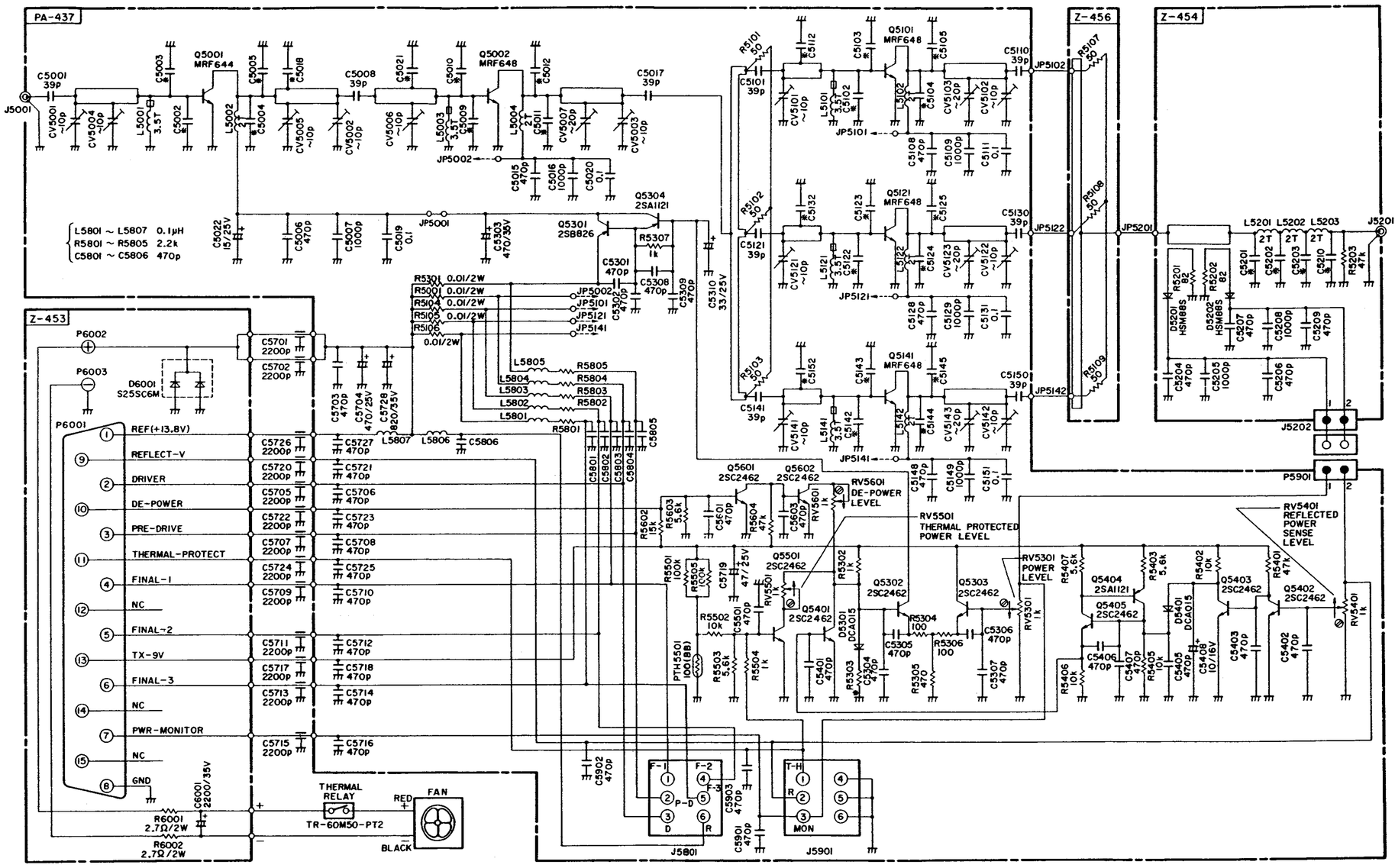

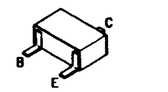

Q5304, Q5401, Q5402, Q5403, Q5404, Q5405, Q5501, Q5601, Q5602

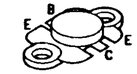

Q5001

Q5301

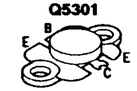

Q5002, Q5101, Q5121, Q5141

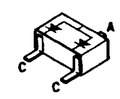

D5301, D5401

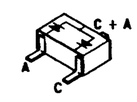

D5201, D5202

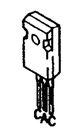

D6001

※ Capacitance of mica capacitors & Resistance

C / Band	C5002	C5003	C5004	C5005	C5009	C5010	C5011	C5012	C5102	C5103	C5104	C5105	C5122	C5123	C5124	C5125
A	27p	27p	33p	33p	33p	33p	36p	36p	33p	33p	36p	36p	33p	33p	36p	36p
B	27p	27p	30p	30p	30p	30p	33p	33p	33p	33p	33p	33p	33p	33p	33p	33p

C / Band	C5142	C5143	C5144	C5145	C5201	C5202	C5203	C5210	C5018	C5021	C5112	C5132	C5152			R5303
A	33p	33p	36p	36p	4p	11p	11p	4p	12p	10p	15p	15p	15p			150Ω
B	33p	33p	33p	33p	4p	11p	11p	4p	5p	5p	—	—	—			220Ω

MECHANICAL PARTS

A = A-Band B = B-Band

REF NO.	DESCRIPTION	PART NO.
1	PA HEATSINK	70-089298
2	SIDE ENCLOSURE	70-010181
3	GROUND STRAP	70-151815
4	GROUND STRAP	70-151818
5	GROUND STRAP	70-151816
6	COVER, PA	70-010180
7	BRACKET "L"	70-158246
101	SCREW M3 x 8	70-151810
102	SCREW M3 x 10	70-151273
103	SCREW M3 x 6	70-151358
104	SCREW M3 x 8	70-151356
105	SCREW M4 x 8	70-151813
106	SCREW M3 x 6	70-151616
	HEX STANDOFF	70-158142
	LOCK STAR WASHER	70-156093
	SCREW	70-151966
	FAN	70-158245
	THERMAL RELAY	70-105018
	NYLON CLAMP	70-151817
	CABLE ASSEMBLY	70-034306
	CLEAR VINYL TUBING	70-157263
G01 A	PA-437 ASSEMBLY	70-075302
G01 B	PA-437 ASSEMBLY	70-075350
G02	Z-456 ASSEMBLY	70-073303
G03 A	Z-454 ASSEMBLY	70-075304
G03 B	Z-454 ASSEMBLY	70-075351
G04	Z-453 ASSEMBLY	70-075305
C5701	2200 pF, 50 V FEED-THRU CAP	70-138243
C5702	2200 pF, 50 V FEED-THRU CAP	70-138243
C5705	2200 pF, 50 V FEED-THRU CAP	70-138243
C5707	2200 pF, 50 V FEED-THRU CAP	70-138243
C5709	2200 pF, 50 V FEED-THRU CAP	70-138243
C5711	2200 pF, 50 V FEED-THRU CAP	70-138243
C5715	2200 pF, 50 V FEED-THRU CAP	70-138243
C5717	2200 pF, 50 V FEED-THRU CAP	70-138243
C5720	2200 pF, 50 V FEED-THRU CAP	70-138243
C5722	2200 pF, 50 V FEED-THRU CAP	70-138243
C5724	2200 pF, 50 V FEED-THRU CAP	70-138243
C5726	2200 pF, 50 V FEED-THRU CAP	70-138243

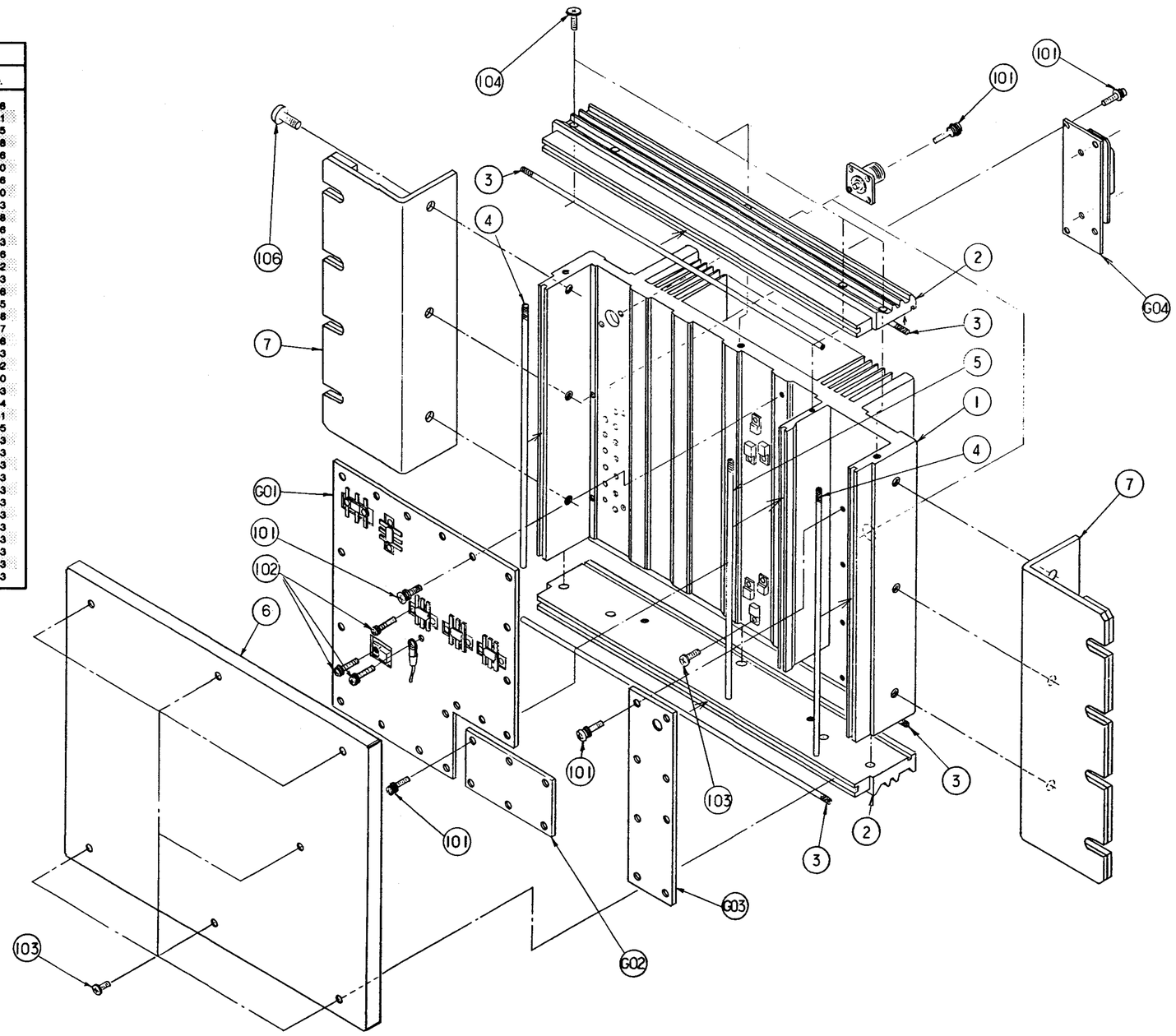

PA-437 AMPLIFIER BOARD

A = A-Band
B = B-Band

REF. NO.	DESCRIPTION	PART NO.
PA-437 A	ENTIRE ASSEMBLY	70-075302
PA-437 B	ENTIRE ASSEMBLY	70-075350
	MISCELLANEOUS	
JP5002	JUMPER STRAP	70-178093
JP5101	JUMPER STRAP	70-178094
JP5121	JUMPER STRAP	70-178095
JP5141	JUMPER STRAP	70-178096
PTH5501	PTH487A01BB471TS POSISTER	70-086042
	CONNECTORS	
J5001	JACK, RF IN	70-159406
J5801	JACK, TEST	70-159465
J5901	JACK, TEST	70-159465
P5901	PLUG, TEST	70-159399
	TRANSISTORS	
Q5001	MRF644	70-080285
Q5002	MRF648	70-080286
Q5101	MRF648	70-080286
Q5121	MRF648	70-080286
Q5141	MRF648	70-080286
Q5301	2SB826	70-080289 287
Q5304	2SA1121SC	70-080289
Q5401	2SC2462LC	70-080160
Q5402	2SC2462LC	70-080160
Q5403	2SC2462LC	70-080160
Q5405	2SC2462LC	70-080160
Q5501	2SC2462LC	70-080160
Q5601	2SC2462LC	70-080160
Q5602	2SC2462LC	70-080160
	DIODES	
D5301	DCA015	70-085099
D5401	DCA015	70-085099
	COILS AND INDUCTORS	
L5001	1.0C4D3.5T COIL	70-090308
L5002	1.058D2T3P COIL	70-090309
L5003	1.0C4D3.5T COIL	70-090308
L5004	1.058D2T3P COIL	70-090309
L5101	1.0C4D3.5T COIL	70-090308
L5102	1.058D2T3P COIL	70-090309
L5121	1.0C4D3.5T COIL	70-090308
L5122	1.058D2T3P COIL	70-090309
L5141	1.0C4D3.5T COIL	70-090308
L5142	1.058D2T3P COIL	70-090309
L5801	MLF 3216A 1ROML COIL	70-090260
L5802	MLF 3216A 1ROML COIL	70-090260
L5803	MLF 3216A 1ROML COIL	70-090260
L5804	MLF 3216A 1ROML COIL	70-090260
L5805	MLF 3216A 1ROML COIL	70-090260
L5806	MLF 3216A 1ROML COIL	70-090260
L5807	MLF 3216A 1ROML COIL	70-090260
	CONTROLS	
RV5301	1K, POWER	70-164040
RV5401	1K, VSWR	70-164040
RV5501	1K, THERMAL PROTECT	70-164040
RV5601	1K, DE-POWER ADJUST	70-164040
	VARIABLE CAPACITORS	
CV5001	10 pF, TTC-7	70-123063
CV5002	10 pF, TTC-7	70-123063
CV5003	10 pF, TTC-210EWD	70-123074
CV5004	10 pF, TTC-7	70-123063
CV5005	10 pF, TTC-7	70-123063
CV5006	10 pF, TTC-7	70-123063
CV5007	20 pF	70-123035

REF. NO.	DESCRIPTION	PART NO.
	VARIABLE CAPACITORS	
CV5101	10 pF, TTC-7	70-123063
CV5102	10 pF, TTC-210EWD	70-123074
CV5103	20 pF	70-123035
CV5121	10 pF, TTC-7	70-123063
CV5122	10 pF, TTC-210EWD	70-123074
CV5123	20 pF	70-123035
CV5141	10 pF, TTC-7	70-123063
CV5142	10 pF, TTC-210EWD	70-123074
CV5143	20 pF	70-123035
	PLASTIC CAPACITORS	
C5019	0.10 µF, 50 V	70-138189
C5020	0.10 µF, 50 V	70-138189
C5111	0.10 µF, 50 V	70-138189
C5131	0.10 µF, 50 V	70-138189
C5151	0.10 µF, 50 V	70-138189
	ELECTROLYTIC CAPACITORS	
C5022	15 µF, 25 V	70-135154
C5310	33 µF, 25 V	70-135155
C5704	2200 µF, 25 V	70-135151
C5719	47 µF, 25 V	70-135157
	MICA CAPACITORS	
C5001	39 pF, 500 V	70-138099
C5002	27 pF, 500 V	70-138097
C5003	27 pF, 500 V	70-138097
C5004 B	30 pF, 500 V	70-138130
C5005 A	33 pF, 500 V	70-138083
C5005 B	30 pF, 500 V	70-138130
C5009	39 pF, 500 V	70-138099
C5009 A	33 pF, 500 V	70-138083
C5009 B	30 pF, 500 V	70-138130
C5010 A	33 pF, 500 V	70-138083
C5010 B	30 pF, 500 V	70-138130
C5011 A	36 pF, 500 V	70-138209
C5011 B	33 pF, 500 V	70-138210
C5012 A	36 pF, 500 V	70-138209
C5012 B	33 pF, 500 V	70-138210
C5017	39 pF, 500 V	70-138099
C5018 A	12 pF, 500 V	70-138094
C5018 B	5 pF, 500 V	70-138135
C5021 A	10 pF, 500 V	70-138100
C5021 B	5 pF, 500 V	70-138135
C5101	39 pF, 500 V	70-138099
C5102	33 39 pF, 500 V	70-138083
C5103	33 39 pF, 500 V	70-138083 33pf
C5103	39 pF, 500 V	70-138099
C5104 A	36 pF, 500 V	70-138209
C5104 B	33 pF, 500 V	70-138210
C5105 A	36 pF, 500 V	70-138209
C5105 B	33 pF, 500 V	70-138210
C5110	39 pF, 500 V	70-138099
C5112 A	15 pF, 500 V	70-138080
C5121	39 pF, 500 V	70-138099
C5122	33 pF, 500 V	70-138083
C5123	33 pF, 500 V	70-138083
C5124 A	36 pF, 500 V	70-138209
C5124 B	33 pF, 500 V	70-138210
C5125 A	36 pF, 500 V	70-138209
C5125 B	33 pF, 500 V	70-138210
C5132 A	15 pF, 500 V	70-138080
C5141	39 pF, 500 V	70-138099
C5142	33 pF, 500 V	70-138083
C5143	33 pF, 500 V	70-138083
C5144 A	36 pF, 500 V	70-138209
C5144 B	33 pF, 500 V	70-138210
C5145 A	36 pF, 500 V	70-138209
C5145 B	33 pF, 500 V	70-138210
C5150	39 pF, 500 V	70-138099
C5152 A	15 pF, 500 V	70-138080
C5400 A	33 pF, 500 V	70-138083

6

PA-437 AMPLIFIER BOARD (Continued)

REF. NO.	DESCRIPTION	PART NO.
	CERAMIC CAPACITORS	
C5006	470 pF, 100 V	70-138236
C5007	1000 pF, 100 V	70-138239
C5015	470 pF, 100 V	70-138236
C5016	1000 pF, 100 V	70-138239
C5108	470 pF, 100 V	70-138236
C5109	1000 pF, 100 V	70-138239
C5128	470 pF, 100 V	70-138236
C5129	1000 pF, 100 V	70-138239
C5148	470 pF, 100 V	70-138236
C5149	1000 pF, 100 V	70-138239
C5301	470 pF, 50 V	70-138195
C5302	470 pF, 50 V	70-138195
C5304	470 pF, 50 V	70-138195
C5305	470 pF, 50 V	70-138195
C5306	470 pF, 50 V	70-138195
C5307	470 pF, 50 V	70-138195
C5308	470 pF, 50 V	70-138195
C5309	470 pF, 50 V	70-138195
C5401	470 pF, 50 V	70-138195
C5402	470 pF, 50 V	70-138195
C5403	470 pF, 50 V	70-138195
C5405	470 pF, 50 V	70-138195
C5406	470 pF, 50 V	70-138195
C5407	470 pF, 50 V	70-138195
C5501	470 pF, 50 V	70-138195
C5601	470 pF, 50 V	70-138195
C5603	470 pF, 50 V	70-138195
C5703	470 pF, 50 V	70-138195
C5706	470 pF, 50 V	70-138195
C5708	470 pF, 50 V	70-138195
C5710	470 pF, 50 V	70-138195
C5712	470 pF, 50 V	70-138195
C5712	470 pF, 50 V	70-138195
C5714	470 pF, 50 V	70-138195
C5716	470 pF, 50 V	70-138195
C5718	470 pF, 50 V	70-138195
C5723	470 pF, 50 V	70-138195
C5725	470 pF, 50 V	70-138195
C5727	470 pF, 50 V	70-138195
C5801	470 pF, 50 V	70-138195
C5802	470 pF, 50 V	70-138195
C5803	470 pF, 50 V	70-138195
C5804	470 pF, 50 V	70-138195
C5805	470 pF, 50 V	70-138195

REF. NO.	DESCRIPTION	PART NO.
	CERAMIC CAPACITORS (Continued)	
C5808	470 pF, 50 V	70-138195
C5901	470 pF, 50 V	70-138195
C5902	470 pF, 50 V	70-138195
C5903	470 pF, 50 V	70-138195
	WIRE RESISTORS	
R5104	0.01 Ω	70-145176
R5105	0.01 Ω	70-145176
R5106	0.01 Ω	70-145176
	METAL RESISTORS	
R5001	0.01 Ω	70-144209
R5101	50 Ω	70-144175
R5104	0.01 Ω	70-144209
R5105	0.01 Ω	70-144209
R5106	0.01 Ω	70-144209
R5301	0.01 Ω	70-144209
R5302	1 kΩ, 1/10 W	70-144125
R5303	5.6 kΩ, 1/10 W	70-144168
R5303 A	150 Ω, 1/10 W	70-144321
R5303 B	220 Ω, 1/10 W	70-144131
R5304	100 Ω, 1/10 W	70-144146
R5305	470 Ω, 1/10 W	70-144158
R5306	100 Ω, 1/10 W	70-144146
R5307	1 kΩ, 1/10 W	70-144125
R5401	47 kΩ, 1/10 W	70-145145
R5402	10 kΩ, 1/10 W	70-144120
R5403	5.6 kΩ, 1/10 W	70-144168
R5405	10 kΩ, 1/10 W	70-144120
R5406	10 kΩ, 1/10 W	70-144120
R5407	5.6 kΩ, 1/10 W	70-144168
R5501	100 kΩ, 1/10 W	70-145128
R5502	10 kΩ, 1/10 W	70-144120
R5504	1 kΩ, 1/10 W	70-144125
R5505	100 kΩ, 1/10 W	70-145128
R5602	15 kΩ, 1/10 W	70-144122
R5603	5.6 kΩ, 1/10 W	70-144168
R5604	47 kΩ, 1/10 W	70-145145
R5801	2.2 kΩ, 1/10 W	70-144113
R5802	2.2 kΩ, 1/10 W	70-144113
R5803	2.2 kΩ, 1/10 W	70-144113
R5804	2.2 kΩ, 1/10 W	70-144113
R5805	2.2 kΩ, 1/10 W	70-144113

Z-456 COMBINER BOARD

REF. NO.	DESCRIPTION	PART NO.
Z-456	ENTIRE ASSEMBLY	70-075303
	METAL RESISTORS	
R5107	50 OHM	70-144175
R5108	50 OHM	70-144175
R5109	50 OHM	70-144175

Z-453 CONNECTOR BOARD

REF. NO.	DESCRIPTION	PART NO.
Z-453	ENTIRE ASSEMBLY	70-075305
	DIODES	
D6001	S25SC6M	70-085231
	ALUMINUM ELECTROLYTIC CAPACITORS	
C6001	2200 µF, 25 V	70-135151
	METAL RESISTORS	
R6001	2.7 Ω	70-144177
	JACKS AND CONNECTORS	
P6001	INTERFACE PLUG	70-159409
P6002	POWER SUPPLY + PLUG	70-159410
P6003	POWER SUPPLY - PLUG	70-159410

Z-454 FILTER BOARD

A = A-Band B = B-Band

REF. NO.	DESCRIPTION	PART NO.
Z-454 A	ENTIRE ASSEMBLY	70-075304
Z-454 B	ENTIRE ASSEMBLY	70-075351
	JACKS AND CONNECTORS	
J5201	JACK, RF OUT	70-159408
J5202	APC CABLE ASSEMBLY	70-034309
	COILS AND INDUCTORS	
L5201	1.5S5D2T2P	70-090311
L5202	1.5S5D2T2P	70-090311
L5203	1.5S5D2T2P	70-090311
	DIODES	
D5201	HSM88S	70-085226
D5202	HSM88S	70-085226
	MICA CAPACITORS	
C5201	4 pF, 500 V	70-138124
C5202	11 pF, 500 V	70-138244
C5203	11 pF, 500 V	70-138244
C5210	4 pF, 500 V	70-138124
	CERAMIC CAPACITORS	
C5204	470 pF, 50 V	70-138195
C5205	1000 pF, 50 V	70-138170
C5206	470 pF, 50 V	70-138195
C5207	470 pF, 50 V	70-138195
C5208	1000 pF, 50 V	70-138170
C5209	470 pF, 50 V	70-138195
	METAL RESISTORS	
R5201	82 Ω, 1/10 W	70-144172
R5202	82 Ω, 1/10 W	70-144172
R5203	47 kΩ, 1/10 W	70-145145

REPLACMENT PARTS ORDERING

To speed delivery and avoid errors, always include the following information when ordering replacement parts:

1. Best identification of the parts.
   A. MIDLAND part number, or
   B. Model and Serial numbers of equipment in which the part is used, with
   C. Part description, and
   D. Schematic reference designator, and,
   E. If necessary, return the old part as sample.

2. Specify quantity desired of each part.

3. Ship-to address (and billing address if different).

Mail or phone your order to:

MIDLAND INTERNATIONAL CORPORATION
1690 North Topping Avenue
Kansas City, Missouri 64120
(816) 241-8500

MIDLAND LMR
LAND MOBILE RADIO

1690 NORTH TOPPING • KANSAS CITY • MISSOURI • 64120
(P.O. BOX 419903 • KANSAS CITY • MISSOURI • 64141)
TELEPHONE: (816) 241-8500 • FAX: (816) 245-1144