FLN6433B

MOSCAD ADAPTER

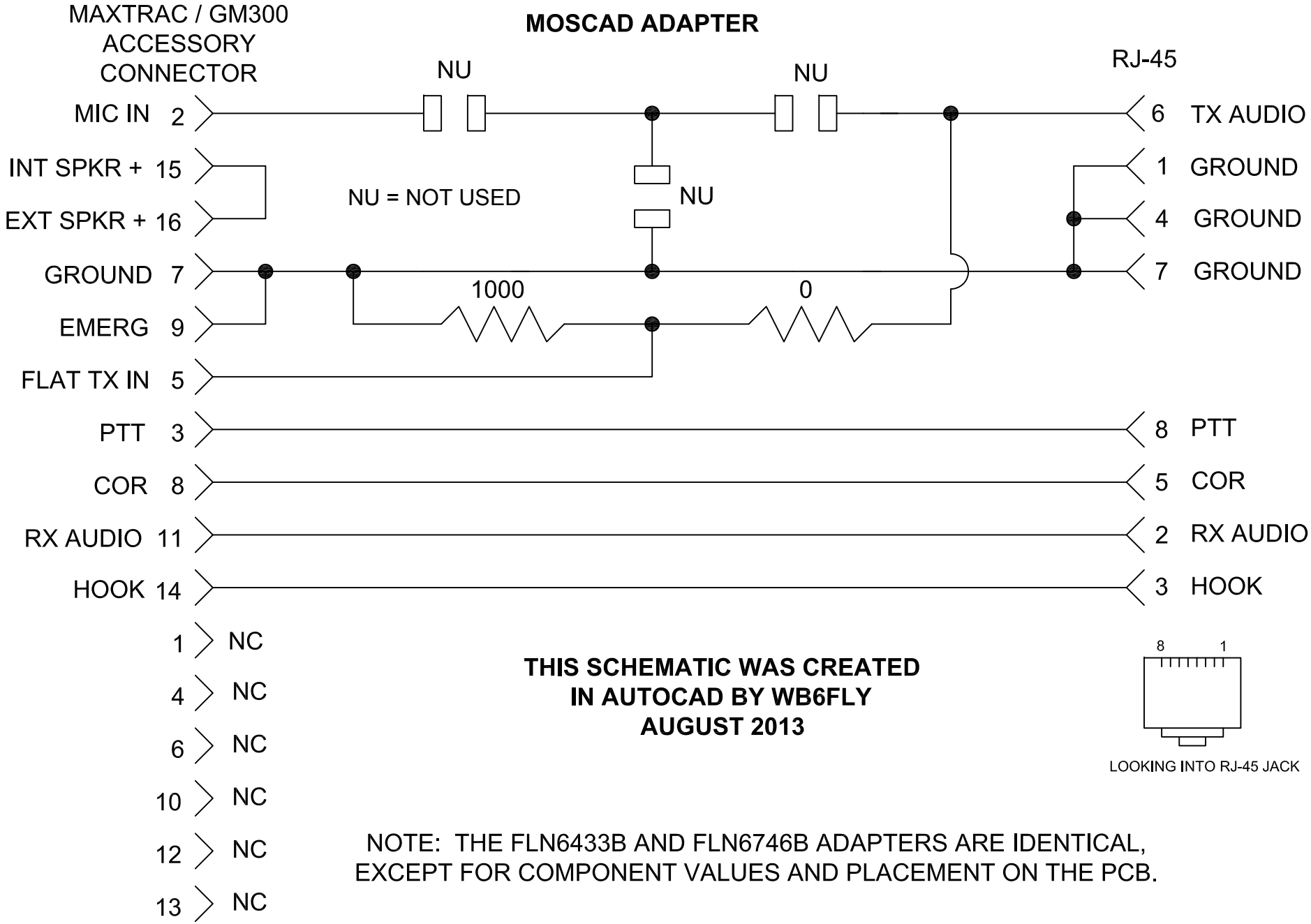

THIS SCHEMATIC WAS CREATED
IN AUTOCAD BY WB6FLY
AUGUST 2013

LOOKING INTO RJ-45 JACK

NOTE: THE FLN6433B AND FLN6746B ADAPTERS ARE IDENTICAL, EXCEPT FOR COMPONENT VALUES AND PLACEMENT ON THE PCB.