MOTOROLA

"MX300-S" SERIES

"Handie-Talkie" Portable Radios

403-430 MHz
440-512 MHz

SPECIFICATIONS

GENERAL

POWER SUPPLY: One rechargeable nickel-cadmium battery, or one primary (Mercury) battery (H24 & H34 only)

SIZE: 2.84″ wide × 1.41″ deep × "H" (see chart below)″ high (72mm × 36mm × "H" mm)

HEIGHT ("H"):	**MX330-S Housing**	**MX340-S Housing**	**MX350-S Housing**	**MX360-S Housing**
Radio Only	4.59″ (117mm)	4.98″ (127mm)	5.76″ (146mm)	6.35″ (161mm)
Radio with Rapid-Charge Battery:				
Light Capacity	6.06″ (154mm)	6.45″ (164mm)	7.23″ (183mm)	7.82″ (198mm)
Medium Capacity	6.43″ (164mm)	6.82″ (174mm)	7.60″ (193mm)	8.19″ (208mm)
Medium High Capacity	6.99″ (178mm)	7.38″ (187mm)	8.16″ (207mm)	8.75″ (222mm)
High Capacity	8.15″ (207mm)	8.54″ (217mm)	9.32″ (236mm)	9.91″ (251mm)
Ultra High Capacity	9.03″ (230mm)	9.43″ (240mm)	10.20″ (259mm)	10.80″ (274mm)
Radio with 3500mAh Mercury Battery:	8.00″ (204mm)	8.39″ (214mm)	9.17″ (233mm)	9.76″ (248mm)

WEIGHT:

Radio Only (Carrier Squelch, 1W)	16.0 oz. (453g)		**Batteries Only**	
Add for Medium Power	0.5 oz. (14g)		Rapid Charge	
Add for High Power	1.8 oz. (50g)	Mercury 17.2 oz. (489g)	Light Capacity	4.9 oz. (139g)
Add for "Private-Line" (PL)	0.5 oz. (14g)		Medium Capacity	7.8 oz. (220g)
			Medium High Capacity	8.2oz. (234g)
Add for "Digital Private-Line" (DPL)	1.7 oz. (49g)		High Capacity	13.3 oz. (377g)
			Ultra High Capacity	20.8oz. (590g)

Weights and dimensions are typical and subject to variation depending upon housing size and model configuration.

TRANSMITTER

RF Power Output – (7.5V Nickel-Cadmium Battery): 1W, 2W, 5W

Frequency Stability: (−30°C to +60°C; +25°C Ref.): ±0.0005%

Modulation: (±5kHz for 100% modulation at 1000Hz): 16F3

FM Noise – (Companion Receiver Method): −45dB

Audio Response: (6dB/octave pre-emphasis from 300 to 3000Hz): +1, −3dB

Audio Distortion – (at 1000Hz, 3kHz deviation): 3%

Spurious/Harmonics –
1W: −60/−60dB 2W: −60/−60dB 5W: −60/−50dB

Maximum Frequency Separation: 12MHz

Current Drain – (with 7.5V Supply):
848mA (1W) 1253mA (2W) 2768mA (5W)

RECEIVER

Frequency Stability: (−30°C to +60°C; +25°C Ref.): ±0.0005%

Channel Spacing: 25kHz

Modulation Acceptance: ±7.5kHz

Spurious & Image Rejection: 80dB

Audio Output – (at less than 5% distortion): 500mW

Current Drain* – (with 7.5V Supply): 199mA (500mW Audio) 55mA (Standby)

Sensitivity:
20dB Quieting: 0.50uV 12dB SINAD: 0.35uV Squelch/PL: 0.25uV

Maximum Frequency Separation –
No Degradation: 2MHz 3dB Sensitivity Degradation: 5MHz

Selectivity (EIA SINAD):
Alternate Channel: −75dB
Adjacent Channel: −70dB
Fourth Channel: −80dB

Intermodulation (EIA SINAD): −70dB

*Add 4mA for "Private-Line" Models.

CHANNEL EXPANSION OPTIONS

CHANNEL SELECTOR (OPTION)	**ZONE SWITCH (OPTION)**			
	None	**2-Pos. (H256)**	**3-Pos. (H257)**	**4-Pos. (H258)**
4-Position (None)	4	8	12	16
6-Position (H252)	6	12	18	24
8-Position (H253)	8	16	24	32
10-Position (H254)	10	20	30	40
12-Position (H255)	12	24	36	48

STANDARD MODELS

MODEL	**Carrier Sq.**	**Tone "Private-Line"**	**"Digital Private-Line"**
1W (H24SSU-)	1140A	3140A	6140A
2W (H34SSU-)	1140A	3140A	6140A
5W (H44SSU-)	1140A	3140A	6140A

RELATED PUBLICATIONS AVAILABLE SEPARATELY

Operating Instructions 68P81022C05
Theory/Maintenance Manual 68P81013C70

SPECIFICATIONS SUBJECT TO CHANGE WITHOUT NOTICE

Service Manual
68P81022C15-B

DISASSEMBLY PROCEDURE

For most servicing, only the front and rear covers need to be removed. This provides access to both sides of the main circuit board, and the modules on the board may be replaced without further disassembly. Turn the radio off and remove the battery before disassembly, removal of modules, or reassembly.

1. Loosen the four captive screws on the back cover until the back cover is free.
2. Remove the back cover. There is a captive washer on each screw. Do not remove or lose the washer. They protect the cover against excessive pressure from the front cover studs.
3. Carefully lift the front cover away from the frame.
4. Unplug the front cover assembly, if necessary.
5. When reassembling the radio, use care to replace the front cover. Slide it straight into the frame. Be sure that items such as the cables, contour pad, and modules are in place and do not protrude in such a manner as to interfere with proper closure which is needed for adequate water sealing of the radio.

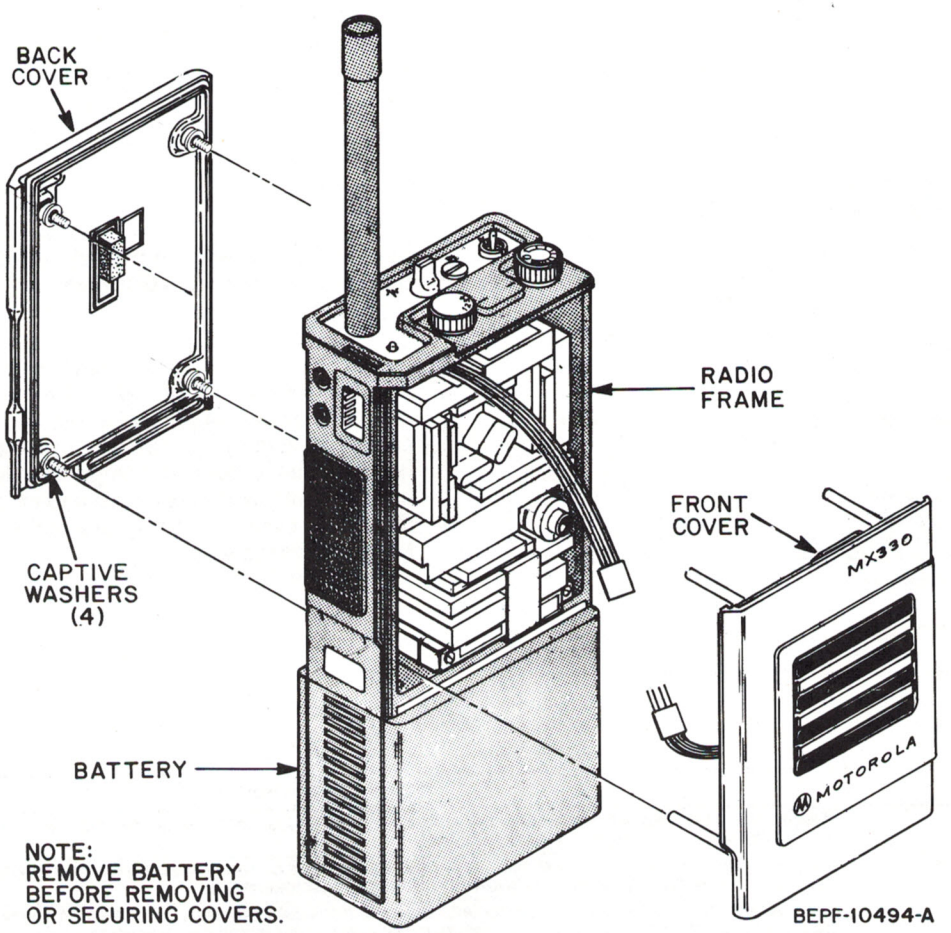

ALIGNMENT

1. GENERAL

Radios are aligned at the factory to provide peak performance over a long period of time. Realignment may be required if components are replaced or aged. To perform these procedures, it is only necessary to remove the front and back covers of the radio, as described in the "Disassembly Procedure."

Refer to the Main Circuit Boards layout diagrams for the location of adjustments. A special alignment procedure for radios with wide channel spacing (greater than 4MHz) is given in the Theory/Maintenance Manual 68P81013C70).

RECOMMENDED TEST EQUIPMENT AND SERVICE AIDS

EQUIPMENT IDENTIFICATION	APPLICATION
Motorola R-1200, R2001, R2002, or R2200 Service Monitor	Signal generator and frequency-deviation meter
Motorola S-1053 AC Voltmeter	AC and audio measurements
Motorola S-1063 DC Multimeter	DC voltage, current, and resistance measurements
Motorola S-1350 Wattmeter	Transmitter power-output measurements
Motorola S-1333 2-Tone Sequential Synthesizer	Generates tones for PL and Tone Signalling
Motorola ST-1175 Dummy Battery Block	Connects radio to bench 7.5V power supply
Motorola NKN6222 Tune-Up Cable and S-1349 MX300 Portable Test Set	Connects test equipment to the antenna jack on the radio and also enables convenient connections to the accessory jack; includes switching functions.
or Motorola RTX4005 "Handie-Talkie" Test Set and RTK4021 Test Cable	Enables convenient connections to the accessory jack; includes switching functions.
Motorola ST-1180 RF Jack Wrench/ Preselector Spanner Wrench	To remove the antenna jack and the nuts securing the preselector to the printed circuit board
Motorola SLN6413 DPL Test Set	Encodes and decodes digital PL signals
Motorola S-1347 Power Supply	Provides DC voltage to radio
Motorola T-1013 Dummy RF Load	Transmitter power-output measurements
Motorola R-1004 Oscilloscope	Waveform measurements
Motorola R-1013 SINAD Meter	Receiver performance testing
Motorola R-1801 Programmer	Programming memory modules
Motorola RTL4809	MX300-S software required for for R-1801 programmer
Motorola RTL5805	Adapter board for memory modules. Required for R-1801 programmer.

2. PHASE-ON-OR-NEAR RADIOS

A Phase-on-or-Near MX300-S radio is one which is shipped from the factory tuned to a transmit frequency and a receive frequency close to the center of the expected operating range. These test frequencies are noted on the orange CAUTION label attached to the side of the radio. After the radio has been aligned to the customer FCC licensed operating frequencies, the CAUTION label should be removed.

a. Operational Checkout at Phase-on-or-Near Frequencies

(1) Turn radio off.
(2) If radio has a zone switch, set it to position B.
(3) Set the frequency-select switch to position 6. If radio is a four-frequency unit, set the frequency-select switch between detents.
(4) Turn radio on.
(5) Check the receiver and transmitter on the frequencies listed on the orange CAUTION label attached to the unit.

b. Alignment On Licensed Channels

(1) Remove battery from unit.
(2) Remove front and back covers.
(3) Remove wire jumper (JU20) between Y7 and Y13 located on the solder side of the PC board.
(4) Remove the memory module, U12, and program it to the licensed operating frequencies. Use the "expand" mode, as given in the R1801 Field Programmer manual.
(5) Replace the programmed memory module. Align the arrow on the top of the module toward the top of the radio.
(6) Use a torque screwdriver to tighten the three screws on the memory module to 2 inch-pounds.
(7) Proceed to the Synthesizer Adjustment Procedure paragraph and align the synthesizer.

NOTE

The synthesizer adjustment must be performed before the unit is aligned. The synthesizer may fail to lock at edge frequencies if the channel spacing is greater than 12MHz and the unit is to be operated at temperature extremes markedly different from those at which it was aligned.

3. SYNTHESIZER ADJUSTMENT

Synthesizer adjustment requires tuning of L4 (VCO) coil to ensure that the synthesizer will lock on each channel under conditions of varying battery voltage and temperature changes.

The maximum frequency spread that the VCO can tune is 12MHz (lowest-receive to highest-receive, lowest-transmit to highest-transmit, or receive-to-transmit frequency spread).

a. To adjust L4, monitor the VCO control voltage (pin 12 of U14) with a dc voltmeter. Set the frequency to the **lowest receive frequency.** Adjust L4 until the control voltage is as close as possible to 1.8V, but not less than 1.8V (remove the tuning tool when taking a voltage reading).

b. Set the frequency to the **lowest transmit frequency,** key the transmitter (into a 50Ω load) and check the control voltage. If the voltage is less than 1.8, readjust L4 for a reading of 1.8V.

c. Next, check the highest receive frequency and the highest transmit frequency. The control voltage should not be greater than 4.8V.

RTX4005 TEST SETS

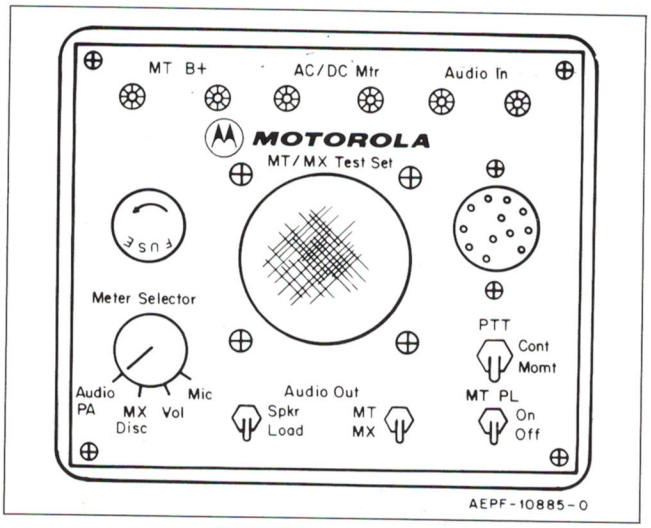

EARLY VERSION

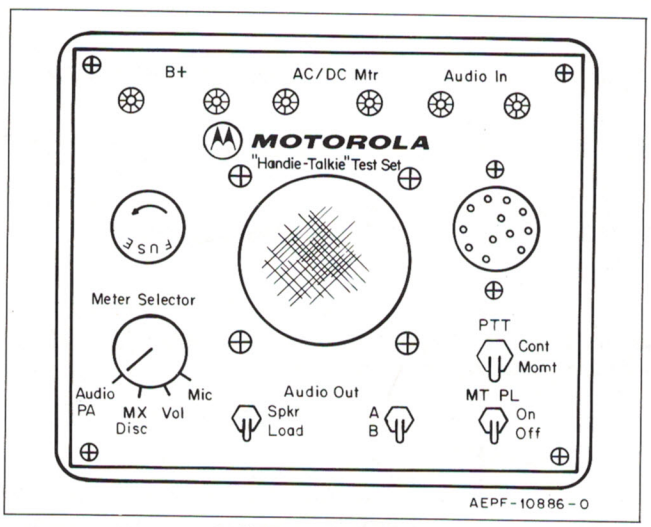

LATER VERSION

4. RECEIVER ALIGNMENT

Preliminary Adjustments:

a. Turn PL switch off (if applicable).
b. Set squelch control (R311 or R7) to maximum ccw position.
c. Set radio to the lowest receive channel.
d. Adjust preselector slugs Z1 thru Z7 until they are flush with the circuit board.

STEP	PROCEDURE	MEASURED AT	USING	NOTES
1	Adjust L4 (VCO coil) to lock synthesizer to injection frequency (f_c – 21.4 MHz) / 2	Pin 12 of U14	Oscilloscope or High Impedance DC Voltmeter	See Synthesizer Adjustment Procedure
2	Adjust Z6 & Z7 for maximum Vdc	M2	DC Voltmeter (DC Multimeter)	
3	Adjust U10 for zero error	Pin 7 of Preselector	Frequency meter on service monitor	Use TEK-10 probe
4	Adjust Z1 thru Z7 for best quieting (lowest ac voltage)	J402, pin 10 to pin 2 (Accessory connector)	AC Voltmeter with ST-1349 or RTX4005 Portable Test Sets	Inject carrier freq. at J401 to produce 20 dB quieting. While tuning Z1 thru Z7, adjust the input to maintain 20 dB quieting.
		20 dB QUIETING TEST		
1	Adjust volume control for 1.73 Vac noise out	J402, pin 10 to pin 2	AC Voltmeter with ST-1349 or RTX4005 Portable Test Sets	Establishes reference noise level for no signal input
2	Adjust signal generator to carrier frequency, minimum output level.	Gen. output connector	Signal Generator on Service Monitor	Connect signal gen. to J401 (Ext. Ant. Jack)
3	Adjust signal generator output level slowly until noise decreases 20 dB	J402, pin 10 to pin 2	AC Voltmeter with ST-1349 or RTX4005 Portable Test Sets	Signal must be less than 0.5 uV
		INTERNAL SQUELCH ADJUSTMENT		
	Adjust R7 until audio noise just stops	Speaker		Threshold squelch

5. TRANSMITTER ALIGNMENT

a. Adjust receiver first.
b. Measurements are made with transmitter keyed and a 50Ω load connected to J401.

STEP	PROCEDURE	MEASURED AT	USING	NOTES
1	Set radio to highest transmit frequency	Pin 12 of U14	DC Voltmeter	Control volts 4.8 Vdc max.*
2	Set radio to lowest transmit frequency	Pin 12 of U14	DC Voltmeter	Control volts 1.8 Vdc min.*
3	Adjust R107 for the following power levels: H24SSU- : 1 W H34SSU- : 2 W H44SSU- : 5 W	J401 DC Supply	Wattmeter Ammeter (DC Multimeter)	DC current should not exceed the following limits: H24SSU- : 848 mA H34SSU- : 1253 mA H44SSU- : 2768 mA
4	Adjust CE101 for correct transmit frequency	J401	Frequency Counter	Tuning tool may affect frequency
5	Adjust R102 for ±5 kHz deviation**	J401	Service Monitor Audio Oscillator	PL/DPL should be between 500 and 1000 Hz deviation Set oscillator to 1.0 kHz, 25 mV at MIC input

*If not, see Synthesizer Adjustment Procedure.
**Includes PL/DPL deviation.

MODULE LOCATIONS & REMOVAL INSTRUCTIONS

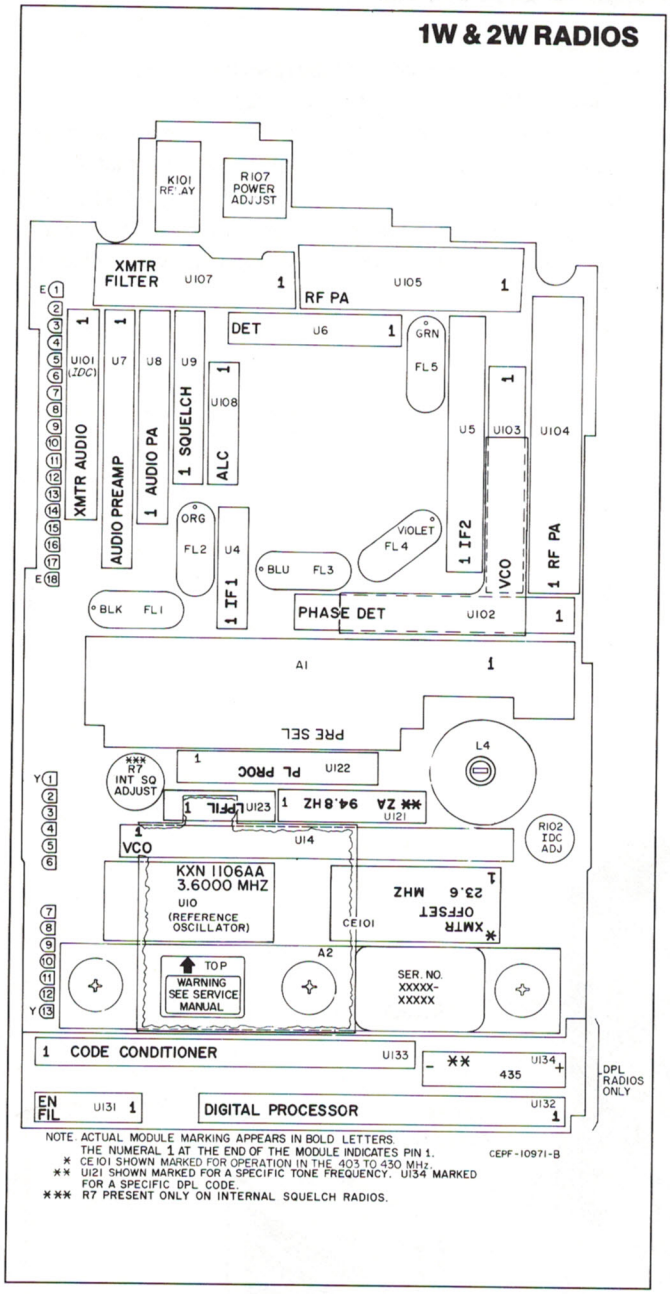

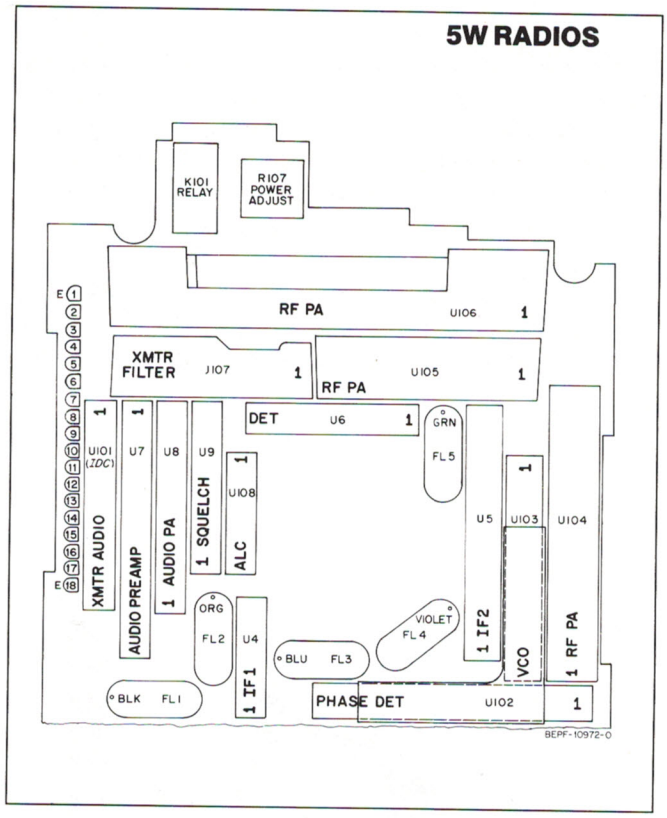

See exploded-view diagram and parts list for location of pads and insulators between modules.

CAUTION

Use the module pusher tool and remove modules with care. Avoid bending pins. Modules A2, U132, and U133 contain MOS devices which are susceptible to damage in handling due to static discharge. Handle with grounded tools and transport in conductive foam or a metallic tray. See MOS circuits handling precautions in the Theory/Maintenance manual.

MODULE	REMOVAL PROCEDURE
PRESELECTOR A1	REMOVE THE THREADED NUTS SECURING THE MODULE TO THE BOARD. THEN PRESS ON THE THREADED STUDS AND PULL THE MODULE STRAIGHT OUT FROM THE COMPONENT SIDE.
REFERENCE OSCILLATOR U10	PUSH ON THE GUIDE PIN AND THE COIL FORM FROM THE SOLDER SIDE OF THE BOARD USING MODULE PUSHER ST-1179. THEN GRASP THE MODULE WITH SEIZERS AND PULL STRAIGHT OUT FROM THE COMPONENT SIDE.
U104 THRU U107	FROM THE SOLDER SIDE OF THE BOARD, PUSH OUT THE MODULE BY INSERTING THE MODULE PUSHER ST-1179 THROUGH THE PUSH-OUT HOLES PROVIDED IN THE BOARD UNDER THE MODULE. THEN GRASP THE MODULE WITH SEIZERS AND PULL STRAIGHT OUT FROM THE COMPONENT SIDE.
U122, U131, U132, AND U133	GRASP THE MODULE WITH SEIZERS AND PULL STRAIGHT OUT. OBSERVE MOS CIRCUIT HANDLING PRECAUTIONS IN THE THEORY/MAINTENANCE MANUAL.
CONTROLLER/PHASE DETECTOR A2; INCLUDES U11 AND U13	LOOSEN THE THREE CAPTIVE SCREWS SECURING THE MODULE TO THE BOARD. DO NOT REMOVE THE CAPTIVE SCREWS FROM THE SUPPORT PLATE. THEN, USING MODULE PUSHER ST-1179, PUSH ON THE TWO GROUND PINS TO REMOVE THE MODULE FROM THE COMPONENT SIDE.
MEMORY MODULE U12	LOOSEN THE THREE CAPTIVE SCREWS SECURING THE MEMORY MODULE COVER TO ASSEMBLY A2. DO NOT REMOVE THE CAPTIVE SCREWS FROM THE COVER. WITH THE SCREWS LOOSE, THE MEMORY MODULE ASSEMBLY CAN BE REMOVED BY LIFTING STRAIGHT UP. (CAUTION: CARE SHOULD BE TAKEN NOT TO TOUCH OR DAMAGE THE EXPOSED MULTI-FLEX CONNECTOR.) REFER TO THE "DISASSEMBLY" SECTION IN THE THEORY/MAINTENANCE MANUAL (68P81013C70) FOR ADDITIONAL INFORMATION.
ALL OTHER MODULES	PUSH ON THE GUIDE PINS FROM THE SOLDER SIDE OF THE BOARD USING THE MODULE PUSHER ST-1179. THEN GRASP THE MODULE WITH SEIZERS AND PULL STRAIGHT OUT FROM THE COMPONENT SIDE.

SAFETY INFORMATION

The United States Department of Labor, through the provisions of the Occupational Safety and Health Act of 1970 (OSHA), has established an electromagnetic energy safety standard which applies to the use of this equipment. Proper use of this radio will result in exposure below the OSHA limit.

DO NOT hold the radio such that the antenna is very close to, or touching, exposed parts of the body, especially the face or eyes, while transmitting. The radio will perform best if the microphone is two or three inches away from the lips and the radio is vertical.

DO NOT hold the transmit (PTT) switch on when not actually desiring to transmit.

DO NOT allow children to play with any radio equipment containing a transmitter.

DO NOT operate a portable transmitter near unshielded electrical blasting caps or in an explosive atmosphere unless it is a type especially qualified for such use.

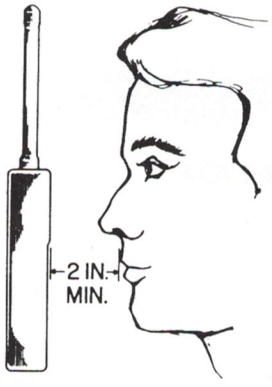

TEPF-11861-O

FACTORY MUTUAL (FM) APPROVED

All standard "MX300-S" Series portable radios are FM approved as intrinsically safe and non-incendive.

FCC REGULATIONS

State that:

1. The rf power output of a radio transmitter shall be no more than that required for satisfactory technical operation considering the area to be covered and the local conditions.
2. Frequency and deviation of a transmitter must be checked before it is placed in service and rechecked once each year thereafter.

TEPF-13027-A

FCC DESIGNATIONS

1W FCCID: AZ489FT4604 2W FCCID: AZ489FT4605 5W FCCID: AZ489FT4606

COMPUTER SOFTWARE COPYRIGHTS

The Motorola products described in this manual may include copyrighted Motorola computer programs stored in semiconductor memories or other media. Laws in the United States and other countries preserve for Motorola certain exclusive rights for copyrighted computer programs, including the exclusive right to copy or reproduce in any form the copyrighted computer program. Accordingly, any copyrighted Motorola computer programs contained in the Motorola products described in this manual may not be copied or reproduced in any manner without the express written permission of Motorola. Furthermore, the purchase of Motorola products shall not be deemed to grant either directly or by implication, estoppel, or otherwise, any license under the copyrights, patents or patent applications of Motorola, except for the normal non-exclusive, royalty free license to use that arises by operation of law in the sale of a product.

TEPF-11413-B

TYPICAL TEST AND ADJUSTMENT PROCEDURES FOR "MX300-S" SERIES RADIOS USING RTX4005 "HANDIE-TALKIE" TEST SET*

TEST OR ADJUSTMENT	B+	AC/DC METER	AUDIO IN	METER SELECTOR	SPKR LOAD	A B	MT PL	PTT
Receiver Alignment	Not Used	To ac voltmeter	Not Used	AUDIO PA	Any	B	Not Used	Center
NOTE: Receiver audio output measured on ac voltmeter. Adjust for best quieting.								
Receiver Sensitivity	Not Used	To ac voltmeter or SINAD Meter	Not Used	AUDIO PA	Any	B	Not Used	Center
NOTE: Receiver audio output measured on ac voltmeter. Check for 20 dB quieting or 12 dB SINAD.								
Receiver Audio Output	Not Used	To ac voltmeter	Not Used	AUDIO PA	Any	B	Not Used	Center
NOTE: Apply a 1000 uV on-frequency carrier modulated with 1000 Hz tone at ±3 kHz deviation to the radio. Set VOLUME control to maximum. The ac voltmeter should indicate no less than 3.74 Vac.								
Transmitter Frequency and Power Output	Not Used	Not Used	Not Used	Any	Any	B	Not Used	CONT or MOMT
NOTE: Makes it possible to key transmitter for test purposes.								
Transmitter Deviation Adjustment	Not Used	To ac voltmeter	Audio Osc. at 1000 Hz and 25 mV	MIC	Any	B	Not Used	CONT or MOMT
NOTE: Adjust "IDC" for ±5 kHz deviation.								
Transmitter Modulation Sensitivity	Not Used	To ac voltmeter	Audio Osc. at 1000 Hz and 3.5 mV	MIC	Any	B	Not Used	CONT or MOMT
NOTE: With PL tone filter removed, deviation should be no less than ±3 kHz.								
Discriminator Output Measurement	Not Used	To ac voltmeter and then to dc voltmeter	Not Used	DISC	Any	B	Not Used	Center
NOTE: ACVM should indicate 250 to 400 mV of noise (audible from speaker) or recovered audio if 1000 uV carrier frequency is applied with a 1000 Hz tone at ±3 kHz deviation. The dc voltmeter should indicate 1.2 to 1.8 Vdc with no carrier applied.								
Audio Filter and Regulator Module U7 Output Check	Not Used	To ac voltmeter	Not Used	VOL	Any	B	Not Used	Center
NOTE: Apply a 1000 uV on-frequency carrier modulated with 1000 Hz tone at ±3 kHz. The ac voltmeter should indicate an output of more than 62 mV ac.								
To inject audio into Audio Power Amplifier	Not Used	To ac voltmeter	Audio Osc. at 1000 Hz and 40 mV	VOL	Any	B	Not Used	Center
NOTE: Apply a 1000 uV on-frequency carrier (unmodulated) to the radio. Set audio oscillator level to 40 mV. Adjust volume control to maximum. Verify 3.74 Vac minimum (rated audio output) is available at output.								
Microphone Output Measurement	Not Used	To ac voltmeter	Not Used	MIC	Any	B	Not Used	Center
NOTE: Key transmitter with PTT switch on *radio*. Ac voltmeter measures microphone output. A loud whistle or "four" into microphone should cause a meter indication of 25 mV minimum.								

*An early version of the RTX4005 "Handie-Talkie" Test Set has some differences in labeling. See RTX4005 diagrams.

EPF-10840-O

FREQUENCY SELECT FLEXIBLE CIRCUIT
(NLN7291A, NLN7292A, NLN7293A, NLN7294A)

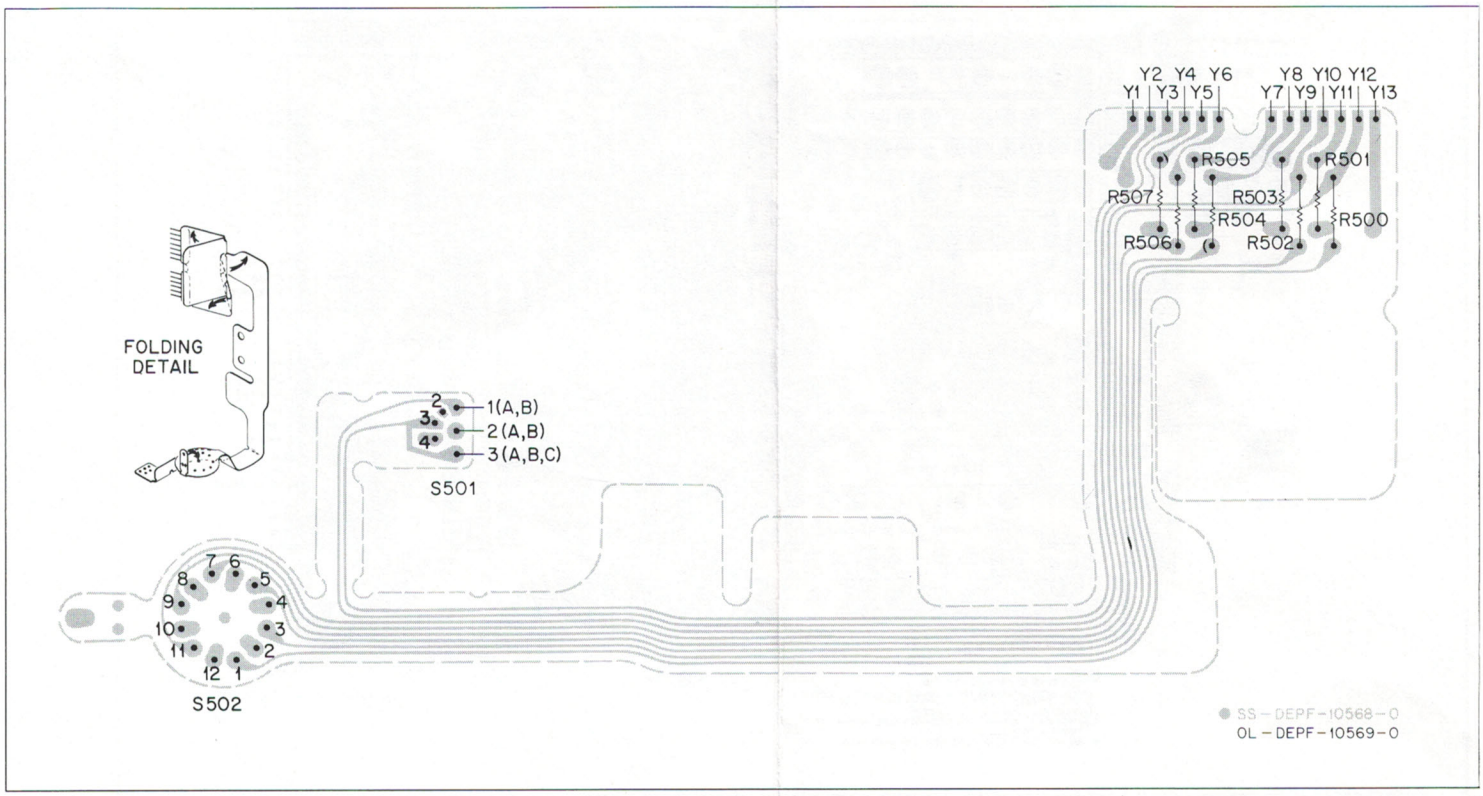

FREQUENCY SELECT FLEXIBLE CIRCUIT
(NLN7291A-1, NLN7292A-1, NLN7293A-1, NLN7294A-1)

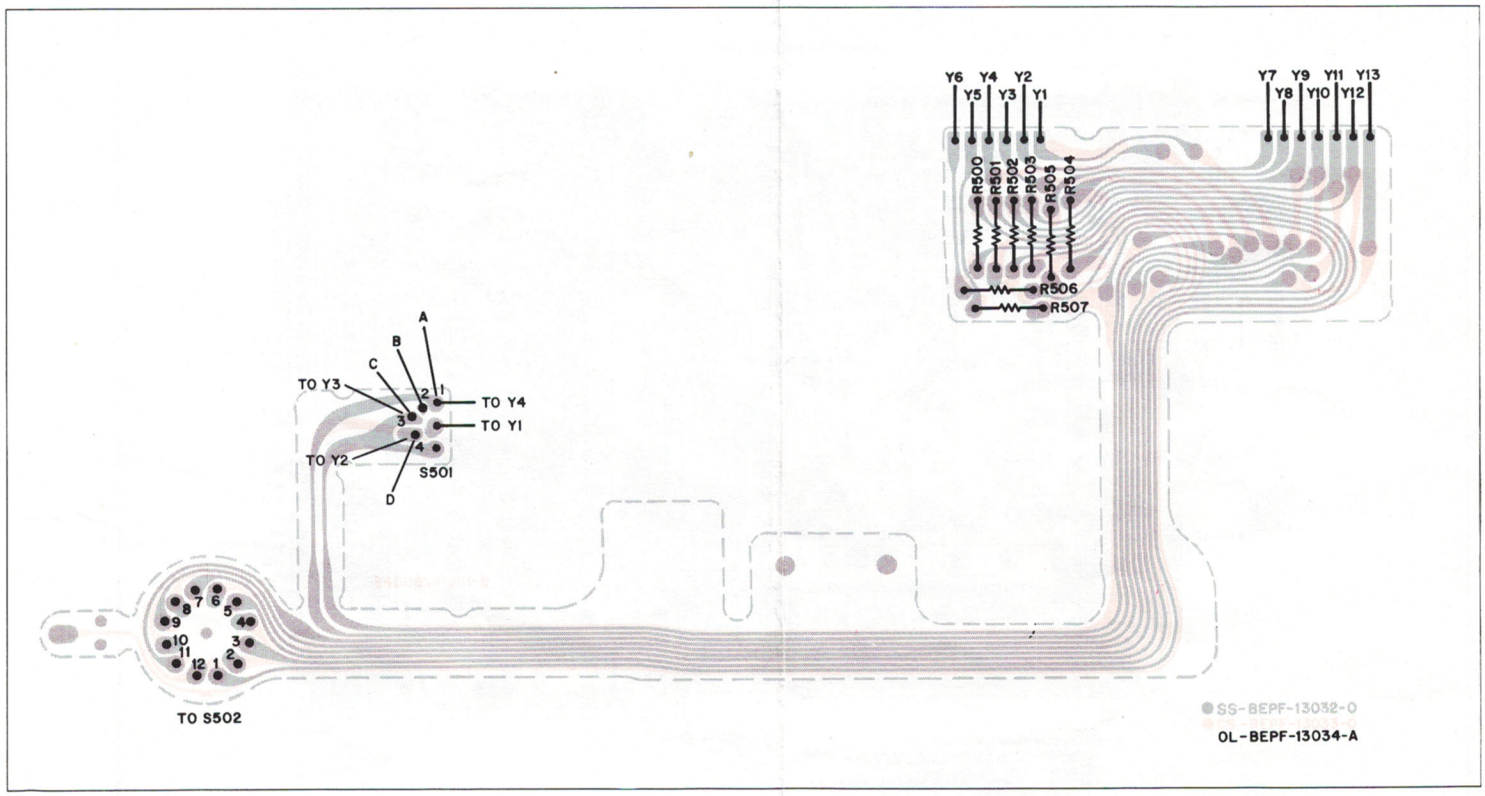

NLE8951B, 8952B, 8953B (5W)

OUTER LAYERS 1 AND 4
(LAYER 1 SHOWN IN RED)

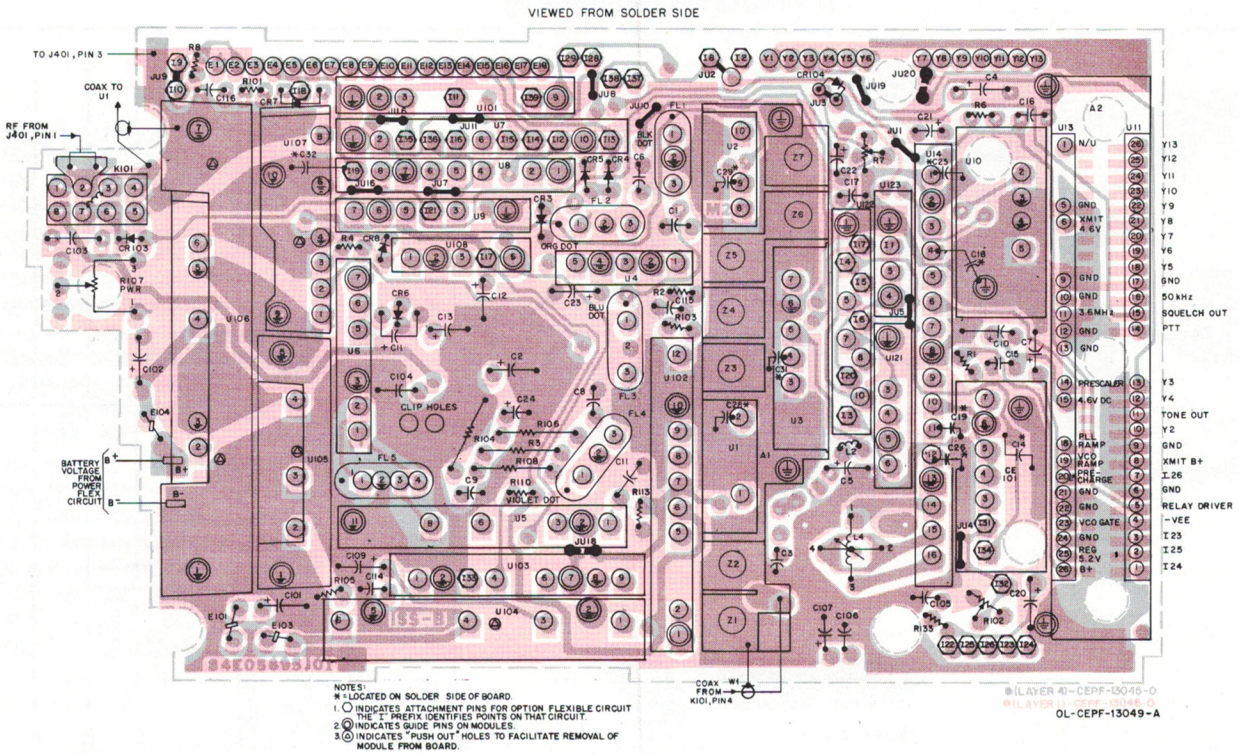

NOTES:
* = LOCATED ON SOLDER SIDE OF BOARD.
1. ○ INDICATES ATTACHMENT PINS FOR OPTION FLEXIBLE CIRCUIT. THE "I" PREFIX IDENTIFIES POINTS ON THAT CIRCUIT.
2. ◎ INDICATES GUIDE PINS ON MODULES.
3. ⊙ INDICATES "PUSH OUT" HOLES TO FACILITATE REMOVAL OF MODULE FROM BOARD.

BOARDS ARE
OF MANUAL

INNER LAYERS 2 AND 3
(LAYER 2 SHOWN IN RED)

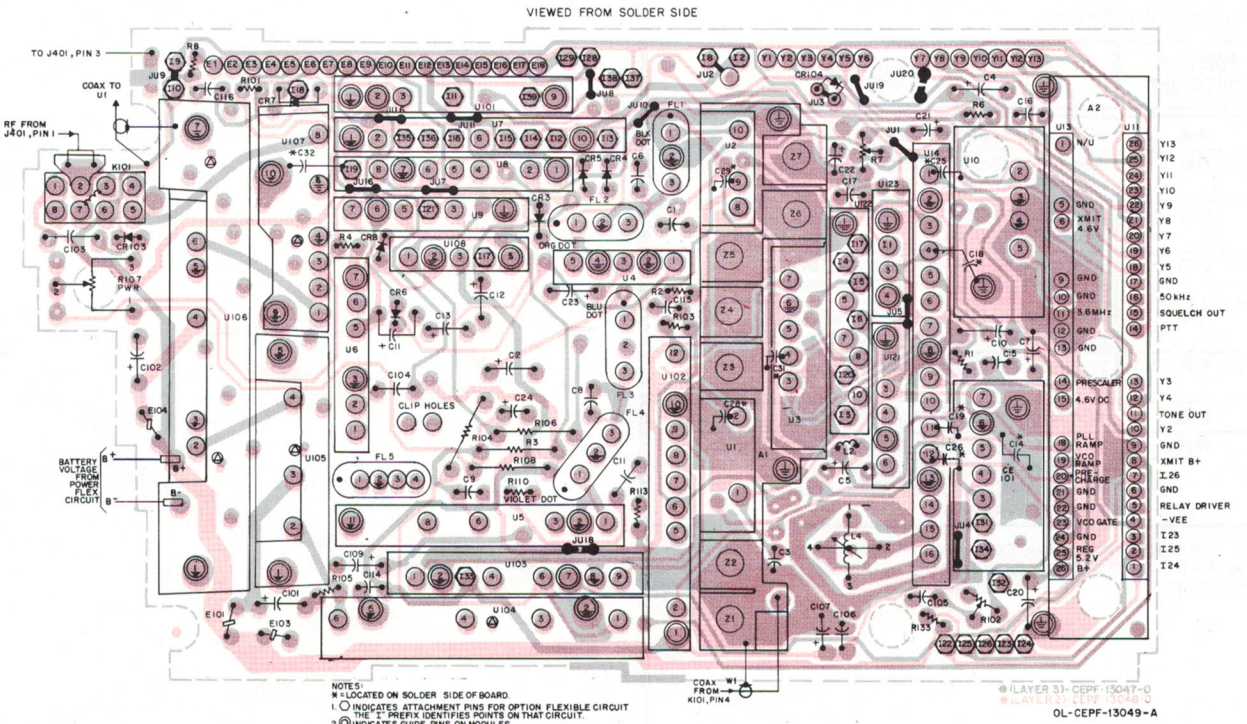

NOTES:
* = LOCATED ON SOLDER SIDE OF BOARD.
1. ○ INDICATES ATTACHMENT PINS FOR OPTION FLEXIBLE CIRCUIT. THE "I" PREFIX IDENTIFIES POINTS ON THAT CIRCUIT.
2. ◎ INDICATES GUIDE PINS ON MODULES.
3. ⊙ INDICATES "PUSH OUT" HOLES TO FACILITATE REMOVAL OF MODULE FROM BOARD.

NLE8941B, 8942B, 8943B (1W)
NLE8981B, 8982B, 8983B (2W)

OUTER LAYERS 1 AND 4
(LAYER 1 SHOWN IN RED)

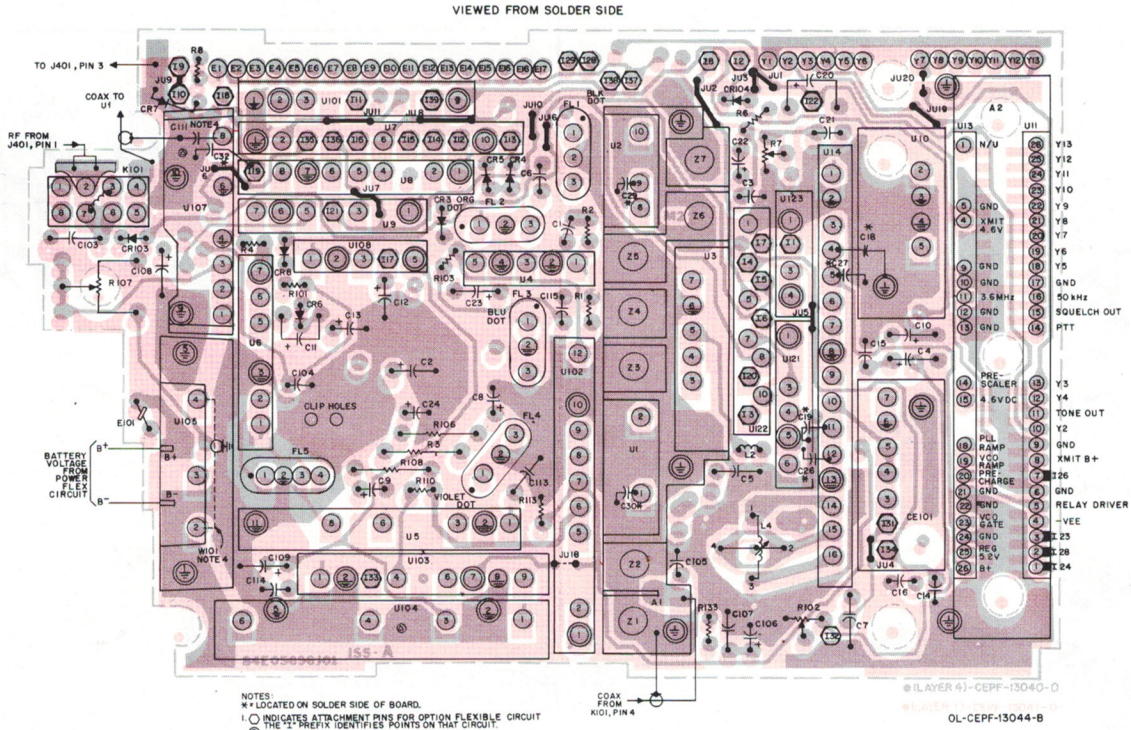

NOTES:
* LOCATED ON SOLDER SIDE OF BOARD.
1. ○ INDICATES ATTACHMENT PINS FOR OPTION FLEXIBLE CIRCUIT THE "I" PREFIX IDENTIFIES POINTS ON THAT CIRCUIT.
2. ◎ INDICATES GUIDE PINS ON MODULES.
3. ⊙ INDICATES "PUSH OUT" HOLES TO FACILITATE REMOVAL OF MODULE FROM BOARD.
4. SEE APPLICABLE SCHEMATIC NOTE FOR WHEN USED.

INNER LAYERS 2 AND 3
(LAYER 2 SHOWN IN RED)

EARLIER CIRCUIT BO
LOCATED IN REAR OF

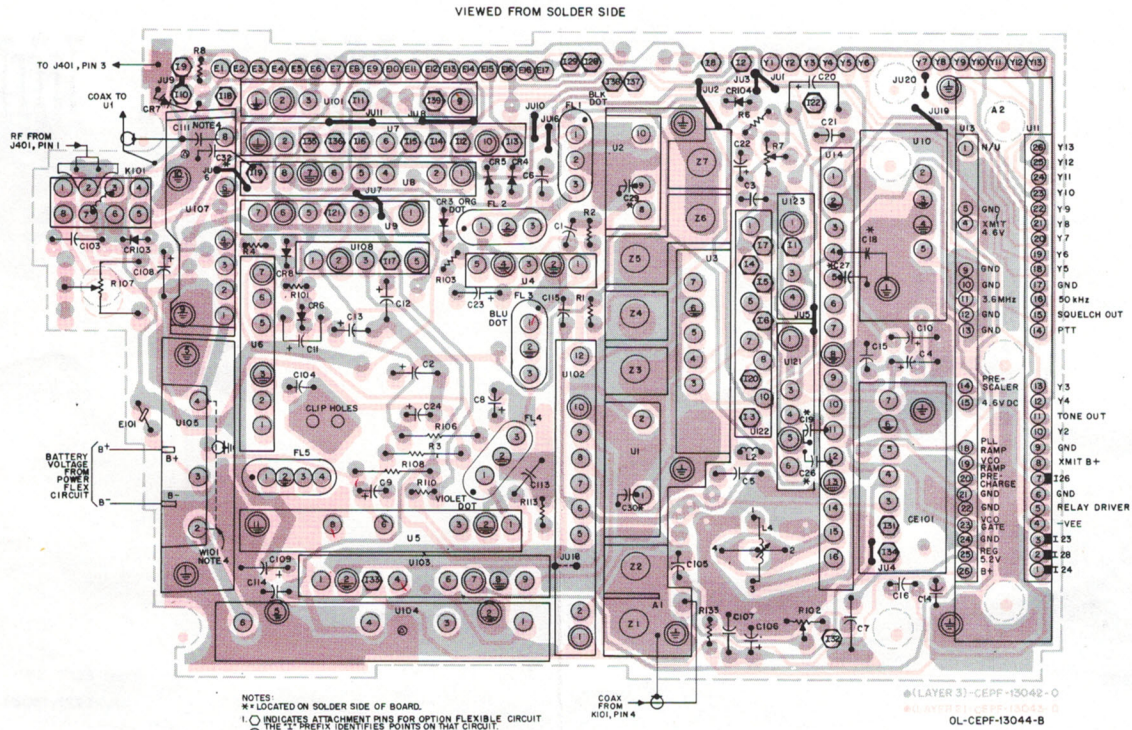

NOTES:
* LOCATED ON SOLDER SIDE OF BOARD.
1. ○ INDICATES ATTACHMENT PINS FOR OPTION FLEXIBLE CIRCUIT THE "I" PREFIX IDENTIFIES POINTS ON THAT CIRCUIT.
2. ◎ INDICATES GUIDE PINS ON MODULES.
3. ⊙ INDICATES "PUSH OUT" HOLES TO FACILITATE REMOVAL OF MODULE FROM BOARD.
4. SEE APPLICABLE SCHEMATIC NOTE FOR WHEN USED.

SCHEMATIC DIAGRAM NOTES

1. ⬡ INDICATES CONNECTION TO INTERCONNECT FLEXIBLE CIRCUIT.
2. UNLESS OTHERWISE STATED, RESISTANCES ARE IN OHMS, CAPACITANCES ARE IN pF.
3. COMPONENT LOCATED ON SOLDER SIDE OF BOARD.
4. JUMPER INFORMATION:
5. CR104 USED ONLY WHEN JU3 IS CUT.
6. SEE PARTS LIST.
7. E9 AND E11 NOT USED.
8. DIODE CR131 IS REMOVED FROM DPL CIRCUIT WHEN ANY UNIT ID OPTION IS USED IN DPL MODELS.
9. 12-CHANNEL FREQUENCY SELECT SWITCH SHOWN.
10. 5W MODELS ONLY.
11. 2W MODELS ONLY.
12. 1W MODELS ONLY.
13. R7, C21 ARE ADDED TO THE MAIN CIRCUIT BOARD AND R311, C301 ARE DELETED FROM THE CONTROL FLEX WHEN INTERNAL SQUELCH OPTION IS USED. INTERNAL SQUELCH OPTION IS MANDATORY ON ZONE SWITCH MODELS.
14. R133 USED ONLY WHEN JU1 IS CUT.
15. SEE BACK-DATING INFORMATION.

TEPF-10916-C

REF. DESIG.	JUMPER CUT FOR
JU1	FUTURE OPTION USE (SEE NOTE 14)
JU2	DVP OPTION
JU3	FUTURE DVP OPTION USE (SEE NOTE 5)
JU4-JU7	DVP OPTION
JU8	ALL RADIOS EXCEPT FOR SELECTIVE CALL OPTIONS H701, H702, AND H703
JU9	PL/DPL MODELS
JU10	PL/DPL ON TRANSMIT-ONLY OPTIONS H820 AND H850
JU11	DVP OPTION
JU12-JU17	NOT USED
JU18	ALL RADIOS
JU19	2-ZONE RADIOS ONLY. OPTION H256
JU20	ALL RADIOS EXCEPT PHASE-ON-OR-NEAR
JU201	30 SEC. TIME-OUT TIMER (UNCUT = 60 SEC. TOT)(P/O U12) (FACTORY PROGRAMMED)
J202	TOT ENABLE (P/O U12) (FACTORY PROGRAMMED)

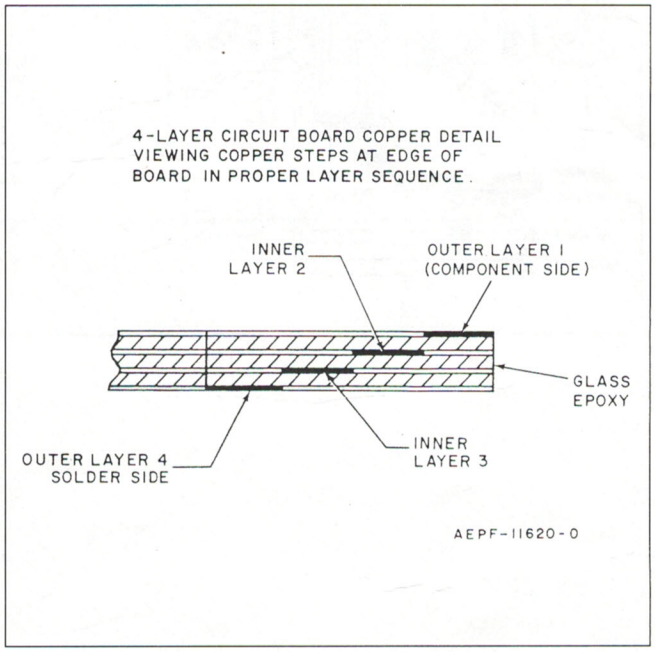

SERVICING NOTES

1. The main printed circuit board is a 4-layer board with two layers of printed circuit bonded inside the board.
2. Before removing the 4-layer board from the frame, unsolder the red B+ and black B− wires, and the jumper wires connecting the antenna jack to the board.
3. The audio output to the speaker is a balanced output. Do not measure with a grounded voltmeter. Use a battery powered voltmeter or a 1:1 transformer, such as the Motorola part number 2584903H01. This transformer has two secondary windings which must be connected in series to provide 1:1 turns ratio.

CAUTION

Use a temperature-controlled soldering iron with a 600°F or 700°F tip. Avoid prolonged contact with the flexible circuit.

4. Flexible printed circuits are used in this radio. The foil pattern is bonded between two layers of flexible material. Use care when handling, avoid excessive bending. Do not overheat.
5. Modules A2, U132 and U133 (DPL models) contain MOS devices which are susceptible to damage in handling due to static discharge. Handle with grounded tools and transport in conductive foam or a metallic tray. See MOS circuits handling precautions in the Theory/Maintenance manual.
6. To connect the radio to a 7.5V bench power supply, use battery block and a current limiting power supply set at 3A maximum.

ITEM REVISION CHART

ITEM NO.	FREQ. (MHz)	SUFFIX
NLE8941B	403-430	
NLE8942B	440-470	
NLE8943B	470-512	
NLE8951B	403-430	
NLE8952B	440-470	
NLE8953B	470-512	
NLE8981B	403-430	
NLE8982B	440-470	
NLE8983B	470-512	

TEPF-13106-O

MAIN CIRCUIT BOARDS COMPONENT LAYOUT DIAGRAMS

CONTROL FLEXIBLE CIRCUIT
(NLN7561A & NLN7561A-1)

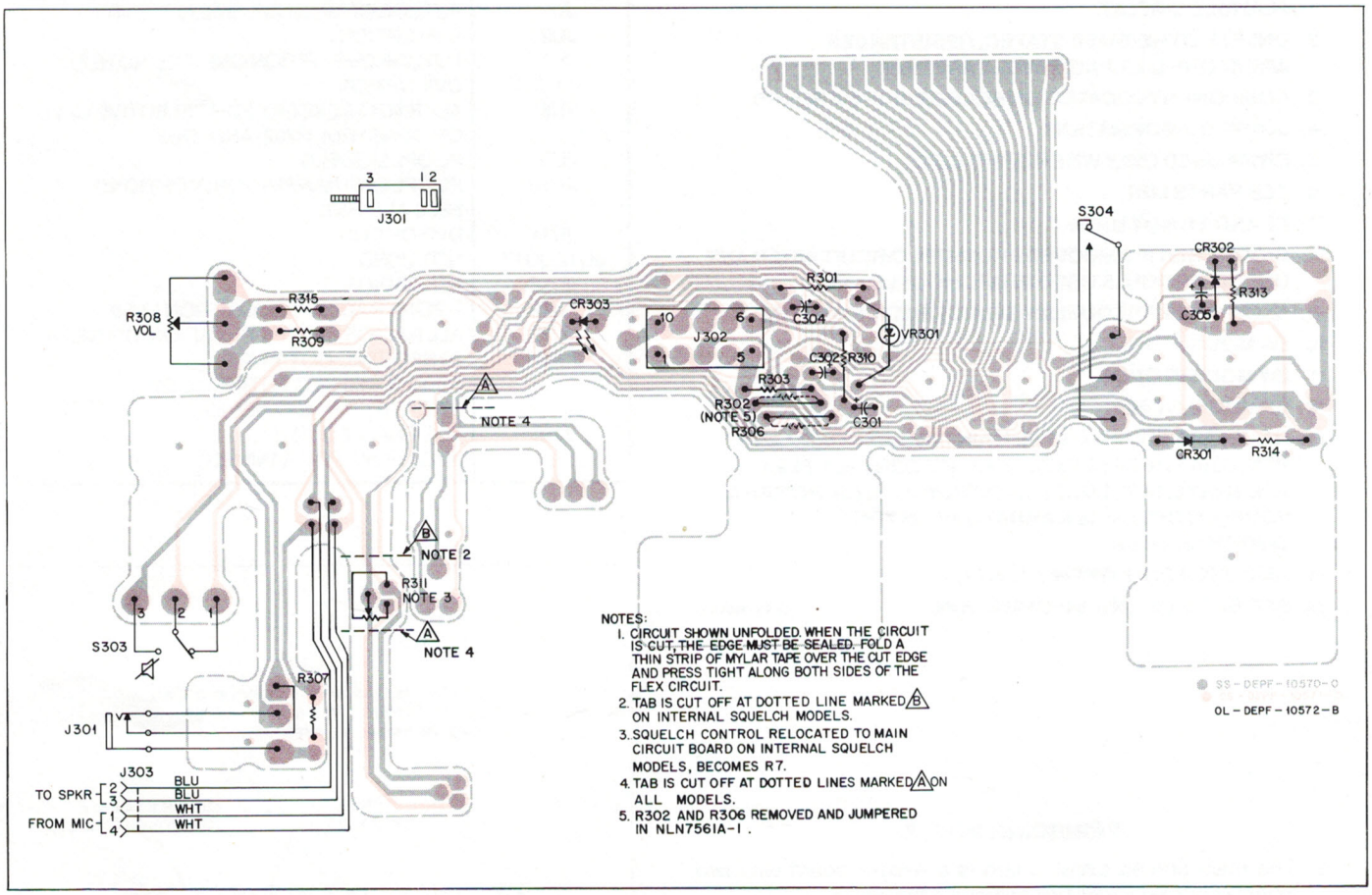

OPTION FLEXIBLE CIRCUIT
(NLN7562A)

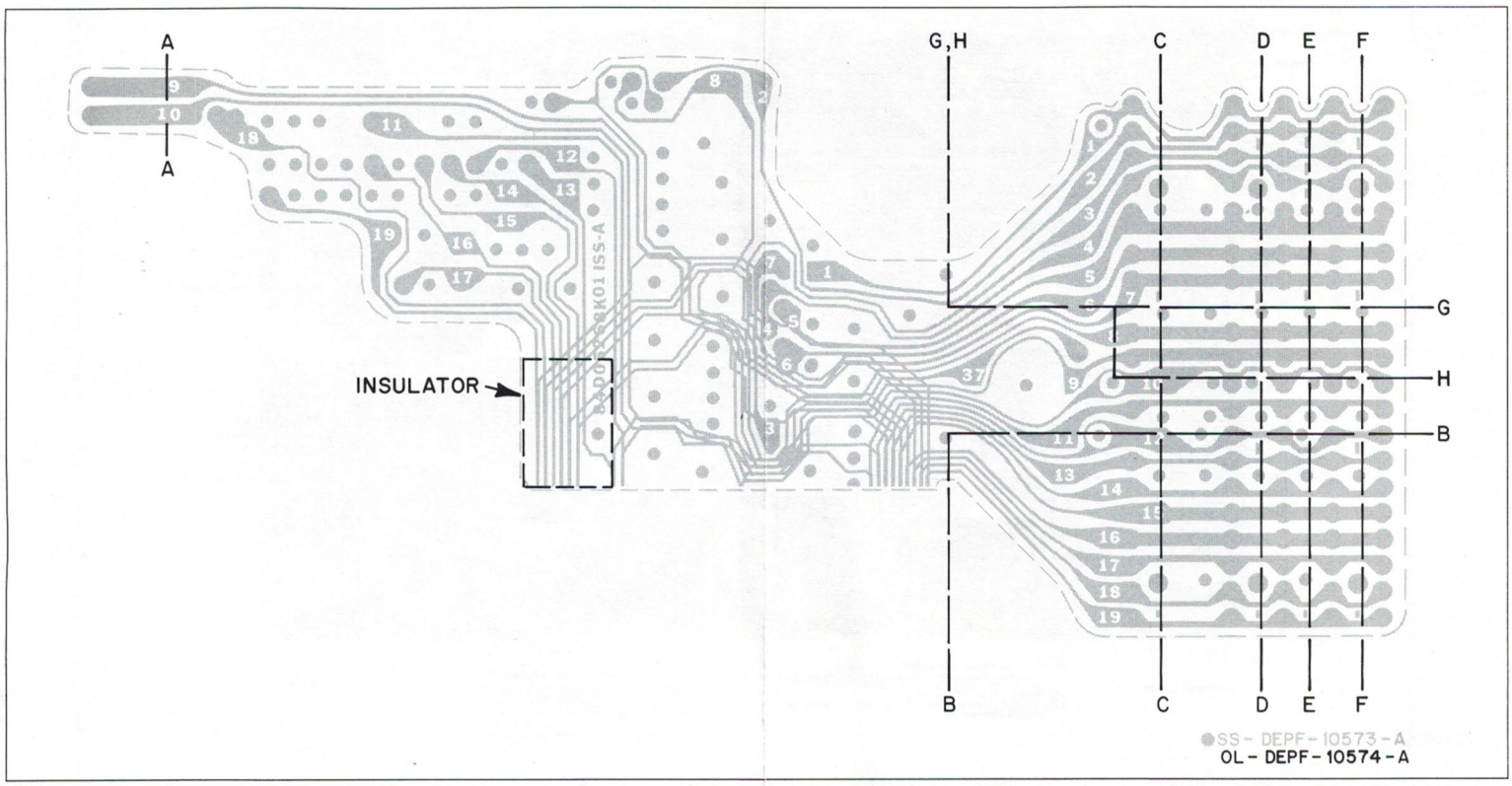

NOTES:

1. The numbered terminals on the option flex circuits connect to the corresponding number (prefixed with the letter "I") on the circuit boards and schematic diagrams.
2. Cut circuit as follows:

POINT CUT ON CIRCUIT	APPLICATION
A-A	ALL 1W, 2W, and 2.5W RADIOS
B-B	WHEN RADIO CONTAINS ONLY THE "DIGITAL PRIVATE-LINE" BOARD AT THE BOTTOM
C-C	WHEN RADIO CONTAINS ANY SINGLE BOARD ADDED TO THE RADIO
D-D	WHEN RADIO CONTAINS A 2-UNIT BOARD FOLLOWED BY ANY OTHER OPTION BOARD
E-E	WHEN RADIO CONTAINS A 3-UNIT BOARD FOLLOWED BY ANY OTHER OPTION BOARD
F-F	WHEN RADIO CONTAINS THREE 2-UNIT OPTION BOARDS
G-G	WHEN RADIO CONTAINS UNIT ID ONLY
H-H	WHEN RADIO CONTAINS UNIT ID/EMERGENCY OR MANUAL ID ONLY. (ALSO INSTALL WIRE JUMPER FROM I37 TO PIN 12 OF ENCODER BOARD)

WHEN THE CIRCUIT IS CUT. THE EDGE MUST BE SEALED. FOLD A THIN STRIP OF MYLAR TAPE OVER THE CUT EDGE AND PRESS TIGHT ALONG BOTH SIDES OF THE FLEX CIRCUIT.

TEPF-10705-A

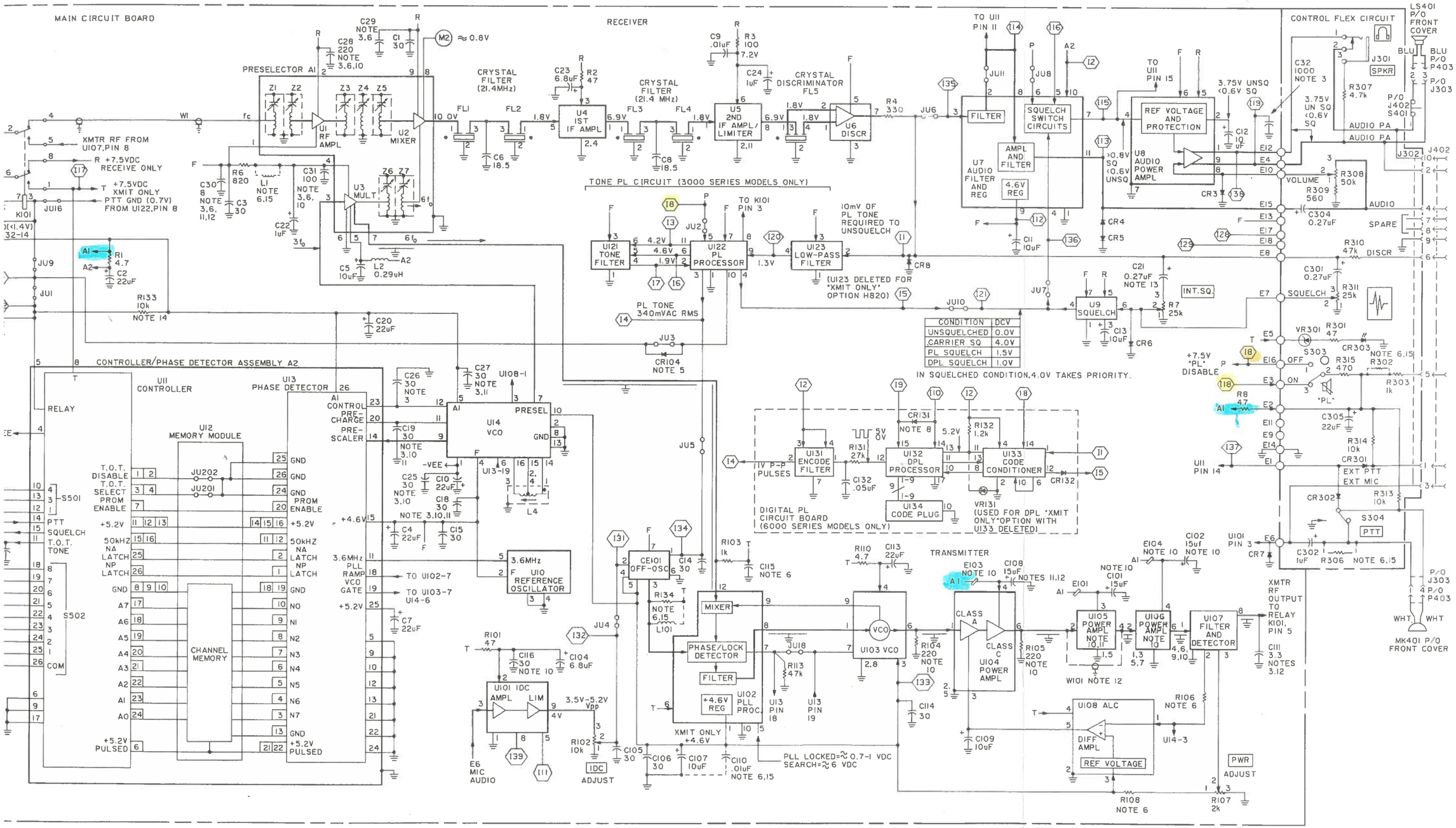

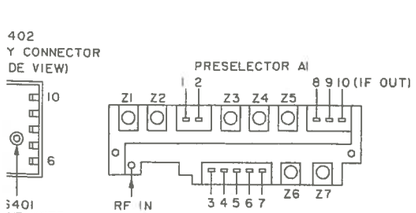

DC VOLTAGES:

A1 OR A2 -7.5VDC PRESENT IN ALL MODES.
R=7.5VDC PRESENT IN RECEIVE MODE.
T=7.5VDC PRESENT IN TRANSMIT MODE.
P=7.5VDC PRESENT IN "PL" OFF MODE.
F=4.6VDC PRESENT IN ALL MODES.
(FROM U7)

☐ INDICATES MODULE TO MODULE INTERCONNECTS (NO CONNECTION TO MAIN RADIO PRINTED CIRCUIT BOARD)

ALL VOLTAGES ARE DC UNLESS INDICATED OTHERWISE.
SEE MANUAL FOR TROUBLESHOOTING INFORMATION.

63D81022C16-C

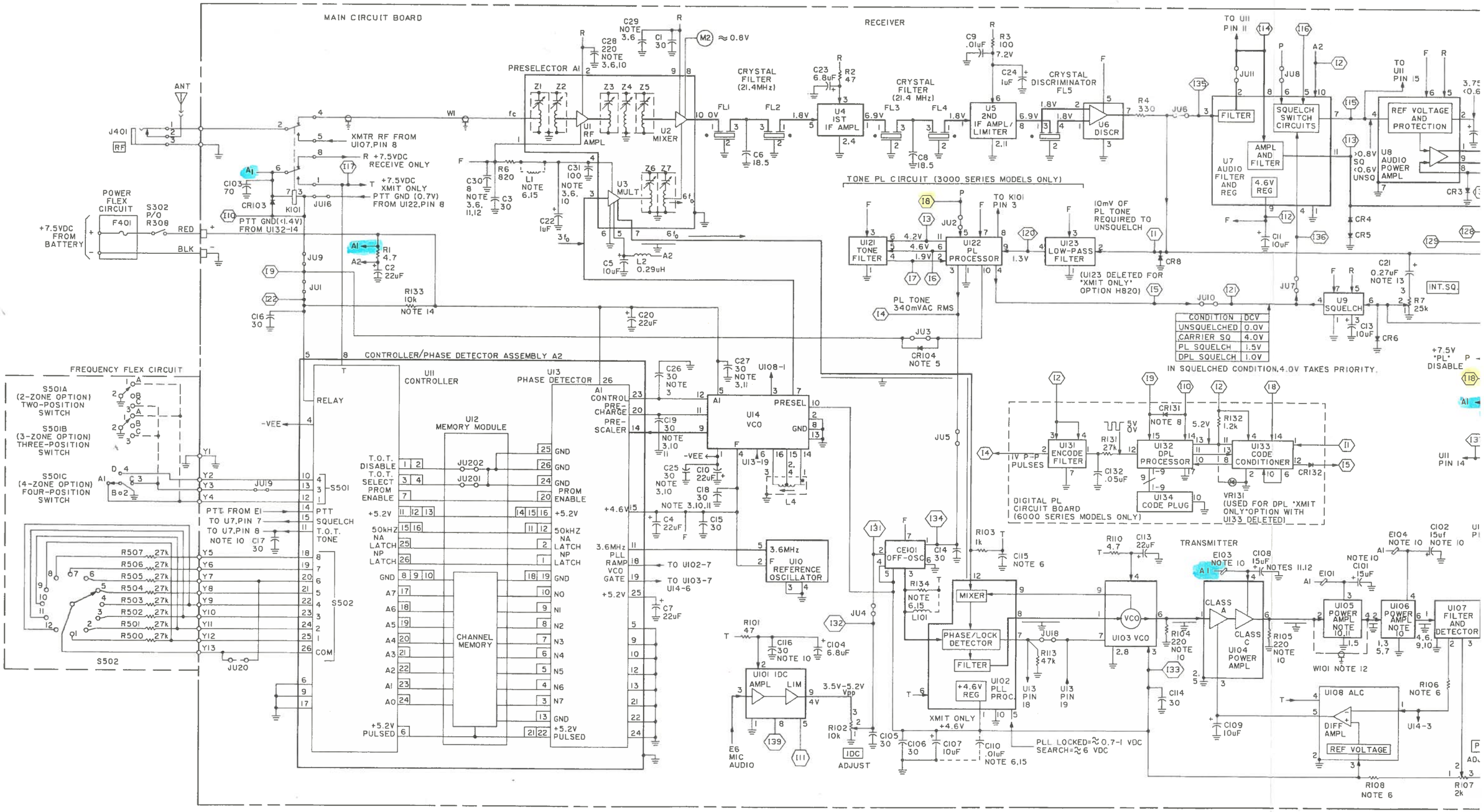

CONDITION	DCV
UNSQUELCHED	0.0V
CARRIER SQ	4.0V
PL SQUELCH	1.5V
DPL SQUELCH	1.0V

DC VOLTAGES:

A1 OR A2 -7.5VDC PRESENT IN ALL MODES.
R=7.5VDC PRESENT IN RECEIVE MODE.
T=7.5VDC PRESENT IN TRANSMIT MODE.
P=7.5VDC PRESENT IN "PL" OFF MODE.
F=4.6VDC PRESENT IN ALL MODES.
(FROM U7)

☐ INDICATES MODULE TO MODULE INTERCONNECTS (NO CONNECTION TO MAIN RADIO PRINTED CIRCUIT BOARD)

ALL VOLTAGES ARE DC UNLESS INDICATED OTHERWISE.
SEE MANUAL FOR TROUBLESHOOTING INFORMATION.

ELECTRICAL PARTS LIST

PLF-1848-C

REFERENCE SYMBOL	MOTOROLA PART NO.	DESCRIPTION
		MODULE:
A1	NLE6931A	Preselector: 403-430MHz; contains U1, U2, & U3
	or NLE6932A	Preselector: 440-470MHz; contains U1, U2, & U3
	or NLE6933A	Preselector: 470-512MHz; contains U1, U2, & U3
A2	NLE8680A	Controller/Phase Detector: contains U11 & U13
		CAPACITOR, Fixed: pF ± 10%; 20V unless stated
C1	2182358G96	30; 75V; N150
C2	2382397D16	22uF ± 20%; 15V
C3	2182358G95	30; 75V; N750
C4	2382397D51	22uF ± 20%; 10V
C5	2382397D15	10uF ± 20%
C6	2182358G76	18.5 ± 2%; 25V
C7	2382397D16	22uF ± 20%; 15V
C8	2182358G76	18.5 ± 2%; 25V
C9	2184008H01	.01uF; 50V
C10	2382397D51	22uF ± 20%; 10V
C11, 12, 13	2382397D03	10uF ± 20%; 6V
C14 thru C19	2105311E49	30; 75V; N750
C20	2382397D16	22uF ± 20%; 15V
C21	2382397D25	0.27uF
C22	2382397D36	1.0uF
C23	2382397D23	6.8uF ± 20%; 20V
C24	2382397D36	1.0uF ± 10%
C25	2105311E49	30, 75V; N750 (5W models only)
C26	2105311E49	30, 75V; N750
C27	2105311E49	30, 75V; N750 (2W models only)
C28	2182213E30	220, 100V, (5W, 440-470MHz models only)
C29	2182358G22	8 ± 0.25pF; 25V (1 & 2W models) (403-430 & 470-512MHz models only)
	or 2182358G21	7 ± 0.25pF; 25V; N150 (5W, 440-470MHz models only)
	or 2182358G01	3.3 ± 0.25pF (5W, 470-512MHz models only)
C30	2182358G22	8 ± 0.25pF; 25V (1 & 2W models) (403-430 & 470-512MHz models only)
C31	2182358G94	100, 75V; N2200 (5W, 470-512MHz models only)
C32	2182213E08	1000, ± 5%, 100V
C101, 102	2382397D04	15uF ± 20%; 15V (5W models only)
C103	2182358G92	70; 75V; N150
C104	2382397D09	6.8uF ± 20%; 10V
C105, 106	2182358G95	30; 75V; N750
C107	2382397D03	10uF ± 20%; 6V
C108	2382397D04	15uF ± 20%; 15V (1 & 2W models)
C109	2382397D15	10uF ± 20%
C110	-----	Not Used
C111	2182358G01	3.3 ± 0.25pF; 10V; NPO (1W models only)
C112	-----	Not Used
C113	2382397D16	22uF ± 20%; 15V
C114	2105311E49	30; 75V; N750
C115	2182358G80	9; 75V (403-430MHz)
	or 2182358G21	7 ± 0.25pF; 25V; N150 (440-512MHz)
C116	2105311E49	30; 75V; N750 (5W models only)
C117 thru C131	-----	Not Used
C132	2184008H13	0.05uF ± 20%; 25V
C301	2382397D25	0.27uF
C302	2382397D36	1uF
C303	-----	Not Used
C304	2382397D25	0.27uF
C305	2382397D16	22uF ± 20%; 15V
		CHANNEL ELEMENT:
CE101	NLE4001A	Oscillator, 23.6MHz (403-430MHz)
	or NLE4002A	Oscillator, 21.2MHz (440-512MHz)
		DIODE: See Note
CR1, 2	-----	Not Used
CR3 thru CR8	4805824C01	Silicon
CR103	4805824C01	Silicon
CR104	4884616A01	Hot Carrier
CR131, 132	4883654H01	Silicon (DPL Board)
CR301, 302	4805824C01	Silicon
CR303	0105952G54	Assembly; includes LED, 4805504C01 & Seal, 3205143J01

		CORE:
E101	2405913C01	Ferrite Bead
E102	-----	Not Used
E103	2405913C04	Ferrite Bead (5W models only)
E104	2405913C01	Ferrite Bead (5W models only)
		FUSE:
F401	6505214E02	5A, cartridge
		FILTER:
FL1/FL2	4805535C05	Matched pair, FL1 coded BLK; FL2 coded ORG
FL3/FL4	4805535C07	Matched pair, FL3 coded BLU; FL4 coded VIOLET
FL5	4805530C01	Discriminator, crystal; coded GRN
		JACK:
J301	0905537F01	Speaker, 2-conductor
J302	0905675C01	Socket, miniature accessory connector
J303	0105957D83	Assembly, Cable; speaker-microphone
J401	0905505C02	Antenna, 2-conductor
J402	1505673C01	Accessory Connector, housing portion; contains S401
		RELAY:
K101	8005037E02	8-pin DPDT
		COIL, RF; unless stated
L1	-----	Not Used
L2	2482723H04	Choke, 0.29uH
L3	-----	Not Used
L4	0105956H66	Coil and Can, coded BLK; includes 7605374B04, core, (403-470MHz)
	or 0105956H65	Coil and Can, coded WHT; includes 7682451B12, core, (470-512MHz)
		SPEAKER:
LS401	5005181E02	2", 24Ω dynamic, freq. response 300-3500Hz
		MICROPHONE:
MK401	0105953D67	Assembly, Microphone (for Low & Medium Power Models); includes exploded view items 55, 58, 59, 100, 101
	or 0105954C39	Assembly, Microphone (for High Power Models); includes exploded view items 55, 58, 59, 100, 101
		RESISTOR, Fixed: Ω ± 10%; ⅛W unless stated
R1	0605139G02	4.7 ± 5%; ¼W; flameproof
R2	0605139G10	47 ± 5%; flameproof
R3	0600185B67	100
R4	0600185B73	330
R5	-----	Not Used
R6	0600185B78	820
R7	1805501C11	Pot. 25k; ½W (internal squelch)
R8	0605139G10	47 ± 5%; flameproof
R101	0605139G10	47 ± 5%; flameproof
R102	1805690G06	Pot, 10k
R103	0600185B79	1k
R104, 105	0600185B71	220 (5W models only)
R106	0600185B90	8.2k (5W models)
	or 0600185B83	2.2k (2W models)
	or ----------	Jumper (1W models)
R107	1805690G07	Pot. 2k ± 20%; ⅓W & insulator
R108	0600185B83	2.2k (1W & 2W models)
	or 0600185B79	1k (5W models)
R109	-----	Not Used
R110	0605139G02	4.7 ± 5%; ¼W; flameproof
R111	-----	Not Used
R112	-----	Not Used
R113	0600185B99	47k
R114 thru R130	-----	Not Used
R131	0600185A83	27k ± 5% (DPL Board)
R132	0600185B80	1.2k (DPL Board)
R133	0600185B91	10k
R134	-----	Not Used
R301	0605139G12	47 ± 5%; ¼W; flameproof
R302	-----	Not Used
R303	0660075A49	1k ± 5%
R304, 305	-----	Not Used
R306	-----	Not Used
R307	0660075A65	4.7k ± 5%
R308	1805764N01	Pot. 50k; includes S302

R309	0660075A43	560 ± 5%
R310	0660075A89	47k ± 5%
R311	1805430C02	Pot. 25k (external squelch)
R312	-----	Not Used
R313, 314	0660075A73	10k ± 5%
R315	0660075A41	470 ± 5%
R500 thru R507	0660075C83	27k ± 5%
		SWITCH:
S301		Not Used
S302	-----	ON/OFF, part of R308
S303	4005190D01	Toggle, SPDT PL
S304	4082159D01	Sub-miniature, SPDT; Push-to-Talk
S401	-----	part of J402
S501A	4005728G01	Toggle, SPDT; (2-zone option)
S501B	or 4005745G01	Toggle, SPTT; (3-zone option)
S501C	or 4005830H01	Rotary 4-position (4-zone option)
S502	4005605J01	Rotary 4 thru 12-position
		HYBRID, Encapsulated:
U1, 2, 3	-----	part of A1
U4	NLN8917A	First I-F Amplifier
U5	NLN8773A	Second I-F Amplifier
U6	NLN5925A	Discriminator
U7	NLN8777B	Audio Filter & Regulator
U8	NLN8775B	Audio Power Amplifier
U9	NLN8776A	Squelch
U10	KXN1106AA	Reference Oscillator
U11	-----	part of A2
U12	NLN5096A	Memory Module (no TOT)
	or NLN7302A	Memory Module (30 sec. TOT)
	or NLN7303A	Memory Module (60 sec. TOT)
U13	-----	part of A2
U14	NLE8660B	VCO Module
U101	NLN5832A	IDC
U102	NLE8342A	Phase-Lock-Loop Processor
U103	NLE8801A	VCO (403-430MHz)
	or NLE8802A	VCO (440-470MHz)
	or NLE8803A	VCO (470-512MHz)
U104	NLE8181A	Power Amplifier (403-430MHz, 2W & 5W models)
	or NLE8182A	Power Amplifier (440-470MHz, 2W & 5W models)
	or NLE8183A	Power Amplifier (470-512MHz, 2W & 5W models)
	or NLE8331A	Power Amplifier (403-430MHz, 1W models)
	or NLE8332A	Power Amplifier (440-470MHz, 1W models)
	or NLE8333A	Power Amplifier (470-512MHz, 1W models)
U105	-----	Not Used on 1W models
	or NLE8001A	Power Amplifier (403-430MHz, 2W & 5W models)
	or NLE8002A	Power Amplifier (440-470MHz, 2W & 5W models)
	or NLE8003A	Power Amplifier (470-512MHz, 2W & 5W models)
U106	-----	Not Used on 1W & 2W models
	or NLE8011A	Power Amplifier (403-430MHz, 5W models only)
	or NLE8012A	Power Amplifier (440-470MHz, 5W models only)
	or NLE8013A	Power Amplifier (470-512MHz, 5W models only)
U107	NFE6041A	Filter & Detector (403-430MHz, 1W & 2W models)
	or NFE6052A	Detector (5W models)
	or NFE6042A	Filter & Detector (440-512MHz, 1W & 2W models)
U108	NLN8779A	Automatic Level Control
U109 thru U120	-----	Not Used
U121	NFN6010A	Tone Filter
U122	NLN4052B	PL Processor
U123	NFN6009A	Lo-Pass Filter
U124 thru U130	-----	Not Used
U131	NFN6011B	Encoder Filter
U132	NLN8921B	DPL Processor
U133	NFN6012B	Code Conditioner
U134	NLN8922A	Code Plug
		DIODE: See Note
VR131	4883461E47	4.95V Zener (DPL Xmit only, option H850)
VR301	4883461E48	4.55V Zener
		CABLE:
W1	0105957D39	Assembly, Coax (1W & 2W models)
	or 0105958E28	Assembly, Coax (5W models)
W101	0105952D59	Assembly, Coax (1W models only)
		NONREFERENCED ITEMS
	0205863A01	NUT, for Preselector
	0300140107	SCREW (for U107)
	0305628C01	SLUG & MOUNTING STUD, for Preselector A1
	0305731J01	SCREW (for A2)
	0400115361	LOCKWASHER, for Preselector
	0400474215	WASHER, Insulating; for Preselector
	0405683D02	LOCKWASHER, for Filter U107
	0705196A02	BOOT, for Crystals FL1, FL3
	0705312E01	BOOT, for Crystals FL2, 4, 5
	0705590J01	PLATE, Support
	0705778D01	BOOT (for U108)
	0905287C07	SOCKET, Module
	0905604C06	SOCKET, for Guide Pin
	1482392E05	INSULATOR, for S501A & B
	1405140L01	INSULATOR, for S501C
	0400002625	LOCKWASHER, for memory module
	1405243L01	INSULATOR, Options Flex
	1405601C01	INSULATOR, for K101
	1405736C01	INSULATOR, for Crystal (3-spot) FL5
	1405844J01	INSULATOR, Plate
	2205794E01	PIN, for Interconnect Flex Connection
	2205306C01	PIN, Contact
	2905254F03	LUG, Grounding; between J401 and P.C. Board
	4205360E01	CLIP, Grounding; for U102, U103
	4205540J01	CLIP, VCO Coil (L4)
	4705598C01	SOCKET, Post; option (e.g.: I11-I17)
	7505241K01	PAD, Shock; PL Processor
	7505295B05	PAD, for Crystals FL1-FL4
	0405587G07	WASHER, Support, for speaker jack

NOTE: For optimum performance, order replacement diodes by Motorola part number only.

Antennas

PLF-939-D

REFERENCE SYMBOL	MOTOROLA PART NO.	DESCRIPTION
		ANTENNA, Helical:
	NAE6231A	403-430MHz (RED dot)
	NAE6232A	440-470MHz (GREEN dot)
	NAE6233A	470-512MHz (BLACK dot)
		ANTENNA, Whip:
	NAE6350A	403-512MHz

PLF-1848-C

RIPTION
30MHz; contains
70MHz; contains
12MHz; contains
)etector:
ı
ed: pF ±10%; 20V
' models only)
' models only)
models only)
& 2W models)
2MHz models only)
150
models only)
nodels only)
& 2W models)
2MHz models only)
nodels only)
;W models only)
& 2W models)
NPO
Hz)
150
models only)
ENT:
: (403-430MHz)
(440-512MHz)
)
LED,
l, 3205143J01

		CORE:
E101	2405913C01	Ferrite Bead
E102	-----	Not Used
E103	2405913C04	Ferrite Bead (5W models only)
E104	2405913C01	Ferrite Bead (5W models only)
		FUSE:
F401	6505214E02	5A, cartridge
		FILTER:
FL1/FL2	4805535C05	Matched pair, FL1 coded BLK; FL2 coded ORG
FL3/FL4	4805535C07	Matched pair, FL3 coded BLU; FL4 coded VIOLET
FL5	4805530C01	Discriminator, crystal; coded GRN
		JACK:
J301	0905537F01	Speaker, 2-conductor
J302	0905675C01	Socket, miniature accessory connector
J303	0105957D83	Assembly, Cable; speaker-microphone
J401	0905505C02	Antenna, 2-conductor
J402	1505673C01	Accessory Connector, housing portion; contains S401
		RELAY:
K101	8005037E02	8-pin DPDT
		COIL, RF; unless stated
L1	-----	Not Used
L2	2482723H04	Choke, 0.29uH
L3	-----	Not Used
L4	0105956H66	Coil and Can, coded BLK; includes 7605374B04, core, (403-470MHz)
	or 0105956H65	Coil and Can, coded WHT; includes 7682451B12, core, (470-512MHz)
		SPEAKER:
LS401	5005181E02	2", 24Ω dynamic, freq. response 300-3500Hz
		MICROPHONE:
MK401	0105953D67	Assembly, Microphone (for Low & Medium Power Models); includes exploded view items 55, 58, 59, 100, 101
	or 0105954C39	Assembly, Microphone (for High Power Models); includes exploded view items 55, 58, 59, 100, 101
		RESISTOR, Fixed: Ω ±10%; ⅛W unless stated
R1	0605139G02	4.7 ± 5%; ¼W; flameproof
R2	0605139G10	47 ± 5%; flameproof
R3	0600185B67	100
R4	0600185B73	330
R5	-----	Not Used
R6	0600185B78	820
R7	1805501C11	Pot. 25k; ½W (internal squelch)
R8	0605139G10	47 ± 5%; flameproof
R101	0605139G10	47 ± 5%; flameproof
R102	1805690G06	Pot, 10k
R103	0600185B79	1k
R104, 105	0600185B71	220 (5W models only)
R106	0600185B90	8.2k (5W models)
	or 0600185B83	2.2k (2W models)
	or ---------	Jumper (1W models)
R107	1805690G07	Pot. 2k ± 20%; ⅓W & insulator
R108	0600185B83	2.2k (1W & 2W models)
	or 0600185B79	1k (5W models)
R109	-----	Not Used
R110	0605139G02	4.7 ± 5%; ¼W; flameproof
R111	-----	Not Used
R112	-----	Not Used
R113	0600185B99	47k
R114 thru R130	-----	Not Used
R131	0600185A83	27k ± 5% (DPL Board)
R132	0600185B80	1.2k (DPL Board)
R133	0600185B91	10k
R134	-----	Not Used
R301	0605139G12	47 ± 5%; ¼W; flameproof
R302	-----	Not Used
R303	0660075A49	1k ± 5%
R304, 305	-----	Not Used
R306	-----	Not Used
R307	0660075A65	4.7k ± 5%
R308	1805764N01	Pot. 50k; includes S302

R309	0660075A43	560 ± 5%
R310	0660075A89	47k ± 5%
R311	1805430C02	Pot. 25k (external squelch)
R312	-----	Not Used
R313, 314	0660075A73	10k ± 5%
R315	0660075A41	470 ± 5%
R500 thru R507	0660075C83	27k ± 5%
		SWITCH:
S301		Not Used
S302	-----	ON/OFF, part of R308
S303	4005190D01	Toggle, SPDT PL
S304	4082159D01	Sub-miniature, SPDT; Push-to-Talk
S401	-----	part of J402
S501A	4005728G01	Toggle, SPDT; (2-zone option)
S501B	or 4005745G01	Toggle, SPTT; (3-zone option)
S501C	or 4005830H01	Rotary 4-position (4-zone option)
S502	4005605J01	Rotary 4 thru 12-position
		HYBRID, Encapsulated:
U1, 2, 3	-----	part of A1
U4	NLN8917A	First I-F Amplifier
U5	NLN8773A	Second I-F Amplifier
U6	NLN5925A	Discriminator
U7	NLN8777B	Audio Filter & Regulator
U8	NLN8775B	Audio Power Amplifier
U9	NLN8776A	Squelch
U10	KXN1106AA	Reference Oscillator
U11	-----	part of A2
U12	NLN5096A	Memory Module (no TOT)
	or NLN7302A	Memory Module (30 sec. TOT)
	or NLN7303A	Memory Module (60 sec. TOT)
U13	-----	part of A2
U14	NLE8660B	VCO Module
U101	NLN5832A	IDC
U102	NLE8342A	Phase-Lock-Loop Processor
U103	NLE8801A	VCO (403-430MHz)
	or NLE8802A	VCO (440-470MHz)
	or NLE8803A	VCO (470-512MHz)
U104	NLE8181A	Power Amplifier (403-430MHz, 2W & 5W models)
	or NLE8182A	Power Amplifier (440-470MHz, 2W & 5W models)
	or NLE8183A	Power Amplifier (470-512MHz, 2W & 5W models)
	or NLE8331A	Power Amplifier (403-430MHz, 1W models)
	or NLE8332A	Power Amplifier (440-470MHz, 1W models)
	or NLE8333A	Power Amplifier (470-512MHz, 1W models)
U105	-----	Not Used on 1W models
	or NLE8001A	Power Amplifier (403-430MHz, 2W & 5W models)
	or NLE8002A	Power Amplifier (440-470MHz, 2W & 5W models)
	or NLE8003A	Power Amplifier (470-512MHz, 2W & 5W models)
U106	-----	Not Used on 1W & 2W models
	or NLE8011A	Power Amplifier (403-430MHz, 5W models only)
	or NLE8012A	Power Amplifier (440-470MHz, 5W models only)
	or NLE8013A	Power Amplifier (470-512MHz, 5W models only)
U107	NFE6041A	Filter & Detector (403-430MHz, 1W & 2W models)
	or NFE6052A	Detector (5W models)
	or NFE6042A	Filter & Detector (440-512MHz, 1W & 2W models)
U108	NLN8779A	Automatic Level Control
U109 thru U120	-----	Not Used
U121	NFN6010A	Tone Filter
U122	NLN4052B	PL Processor
U123	NFN6009A	Lo-Pass Filter
U124 thru U130	-----	Not Used
U131	NFN6011B	Encoder Filter
U132	NLN8921B	DPL Processor
U133	NFN6012B	Code Conditioner
U134	NLN8922A	Code Plug
		DIODE: See Note
VR131	4883461E47	4.95V Zener (DPL Xmit only, option H850)
VR301	4883461E48	4.55V Zener
		CABLE:
W1	0105957D39	Assembly, Coax (1W & 2W models)
	or 0105958E28	Assembly, Coax (5W models)

W101	0105952D59	Assembly, Coax (1W models only)
NONREFERENCED ITEMS		
	0205863A01	NUT, for Preselector
	0300140107	SCREW (for U107)
	0305628C01	SLUG & MOUNTING STUD, for Preselector A1
	0305731J01	SCREW (for A2)
	0400115361	LOCKWASHER, for Preselector
	0400474215	WASHER, Insulating; for Preselector
	0405683D02	LOCKWASHER, for Filter U107
	0705196A02	BOOT, for Crystals FL1, FL3
	0705312E01	BOOT, for Crystals FL2, 4, 5
	0705590J01	PLATE, Support
	0705778D01	BOOT (for U108)
	0905287C07	SOCKET, Module
	0905604C06	SOCKET, for Guide Pin
	1482392E05	INSULATOR, for S501A & B
	1405140L01	INSULATOR, for S501C
	0400002625	LOCKWASHER, for memory module
	1405243L01	INSULATOR, Options Flex
	1405601C01	INSULATOR, for K101
	1405736C01	INSULATOR, for Crystal (3-spot) FL5
	1405844J01	INSULATOR, Plate
	2205794E01	PIN, for Interconnect Flex Connection
	2205306C01	PIN, Contact
	2905254F03	LUG, Grounding; between J401 and P.C. Board
	4205360E01	CLIP, Grounding; for U102, U103
	4205540J01	CLIP, VCO Coil (L4)
	4705598C01	SOCKET, Post; option (e.g.: I11-I17)
	7505241K01	PAD, Shock; PL Processor
	7505295B05	PAD, for Crystals FL1-FL4
	0405587G07	WASHER, Support, for speaker jack

NOTE: For optimum performance, order replacement diodes by Motorola part number only.

Antennas

PLF-939-D

REFERENCE SYMBOL	MOTOROLA PART NO.	DESCRIPTION
		ANTENNA, Helical:
	NAE6231A	403-430MHz (RED dot)
	NAE6232A	440-470MHz (GREEN dot)
	NAE6233A	470-512MHz (BLACK dot)
		ANTENNA, Whip:
	NAE6350A	403-512MHz

BACK-DATING INFORMATION

ITEM NO.	REF. SYMBOL/CHANGES	LOC.	CHANGED TO
NLE8941A NLE8942A NLE8943A NLE8951A NLE8952A NLE8953A NLE8981A NLE8982A NLE8983A	K101 Changed; Was 8005037E01; 8-pin DPDT (used on some early version radios)		
NLE8941A NLE8942A NLE8943A NLE8981A NLE8982A NLE8983A	C29, C3; Added to some later version radios		
NLE8951A	C25 thru C29; Added to some later version radios		
NLE8952A	C25 thru C29, C33; Added to some later version radios		
NLE8953A	C25, C26, C27, C29, & C31; Added to some later version radios		
NLE8941A NLE8942A	C110 Deleted; Was 2184008H01, .01uF, 50V	U102-1 to gnd.	NLE8941A-1 NLE8942A-1
NLE8943A NLE8951A	L1 Deleted; Was 2482723H04, 0.29uH choke	U3-1 to R6	NLE8943A-1 NLE8951A-1
NLE8952A NLE8953A	L101 Deleted; Was 2482723H19, 2.6uH choke	U102-2 to R134	NLE8952A-1 NLE8953A-1
NLE8981A NLE8982A	R134 Deleted; Was 0600185B79, 1k	CE101-3 to L101	NLE8981A-1 NLE8982A-1
NLE8983A			NLE8983A-1
NLN7561A	R102 Changed; Was 1805690G06; 10k		NLN7561A-1
	R302 Deleted; Was 0600175A49, 470 (Replaced with jumper)	between R315 & R303	
	R303 Changed; Was 0600175A49, 470		
	R306 Deleted; Was 0600185B90, 8.2k (Replaced with jumper)	+ side C302 to MK401-1	
NLE8941A-1 NLE8942A-1 NLE8943A-1 NLE8951A-1 NLE8952A-1 NLE8953A-1 NLE8981A-1 NLE8982A-1 NLE8983A-1 NLE8941B NLE8942B NLE8943B NLE8951B NLE8952B NLE8953B NLE8981B NLE8982B NLE8983B NLN7561A-1	AS SHOWN		

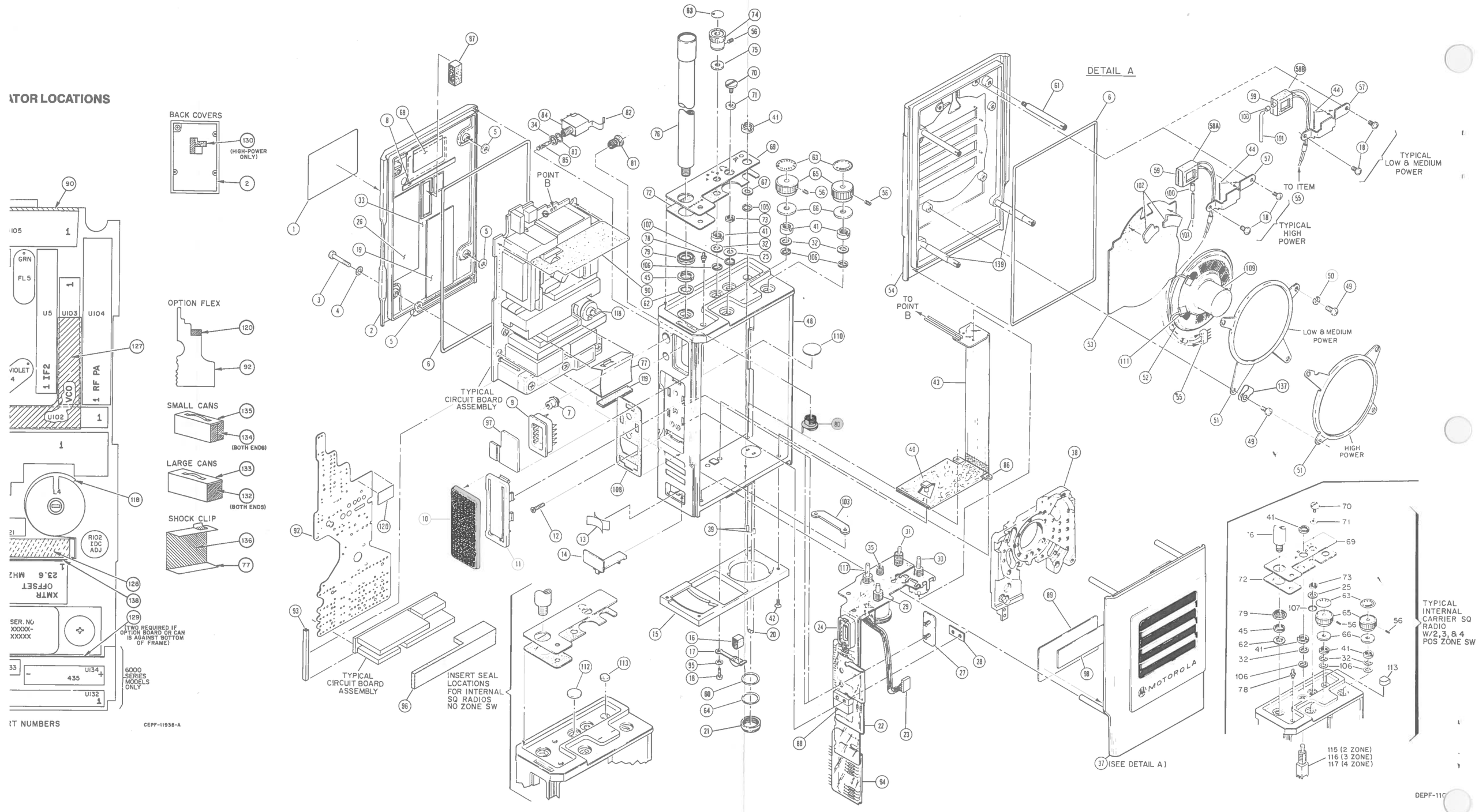
ATOR LOCATIONS
BACK COVERS
(HIGH-POWER ONLY)
OPTION FLEX
SMALL CANS
(BOTH ENDS)
LARGE CANS
(BOTH ENDS)
SHOCK CLIP
U105
GRN
FL5
U5
U103
U104
1 IF2
VCO
1 RF PA
U102
R102 IDC ADJ
XMTR OFFSET 23.6 MHZ
SER. NO XXXXX-XXXXX
U134
435
U132
(TWO REQUIRED IF OPTION BOARD OR CAN IS AGAINST BOTTOM OF FRAME)
6000 SERIES MODELS ONLY
RT NUMBERS
CEPF-11938-A
POINT B
TYPICAL CIRCUIT BOARD ASSEMBLY
TYPICAL CIRCUIT BOARD ASSEMBLY
INSERT SEAL LOCATIONS FOR INTERNAL SQ RADIOS NO ZONE SW
DETAIL A
TO POINT B
TO ITEM
TYPICAL LOW & MEDIUM POWER
TYPICAL HIGH POWER
LOW & MEDIUM POWER
HIGH POWER
(SEE DETAIL A)
MOTOROLA
TYPICAL INTERNAL CARRIER SQ RADIO W/2,3,& 4 POS ZONE SW
115 (2 ZONE)
116 (3 ZONE)
117 (4 ZONE)
DEPF-110

60

missing

PAD AND INSULATOR LOCATIONS

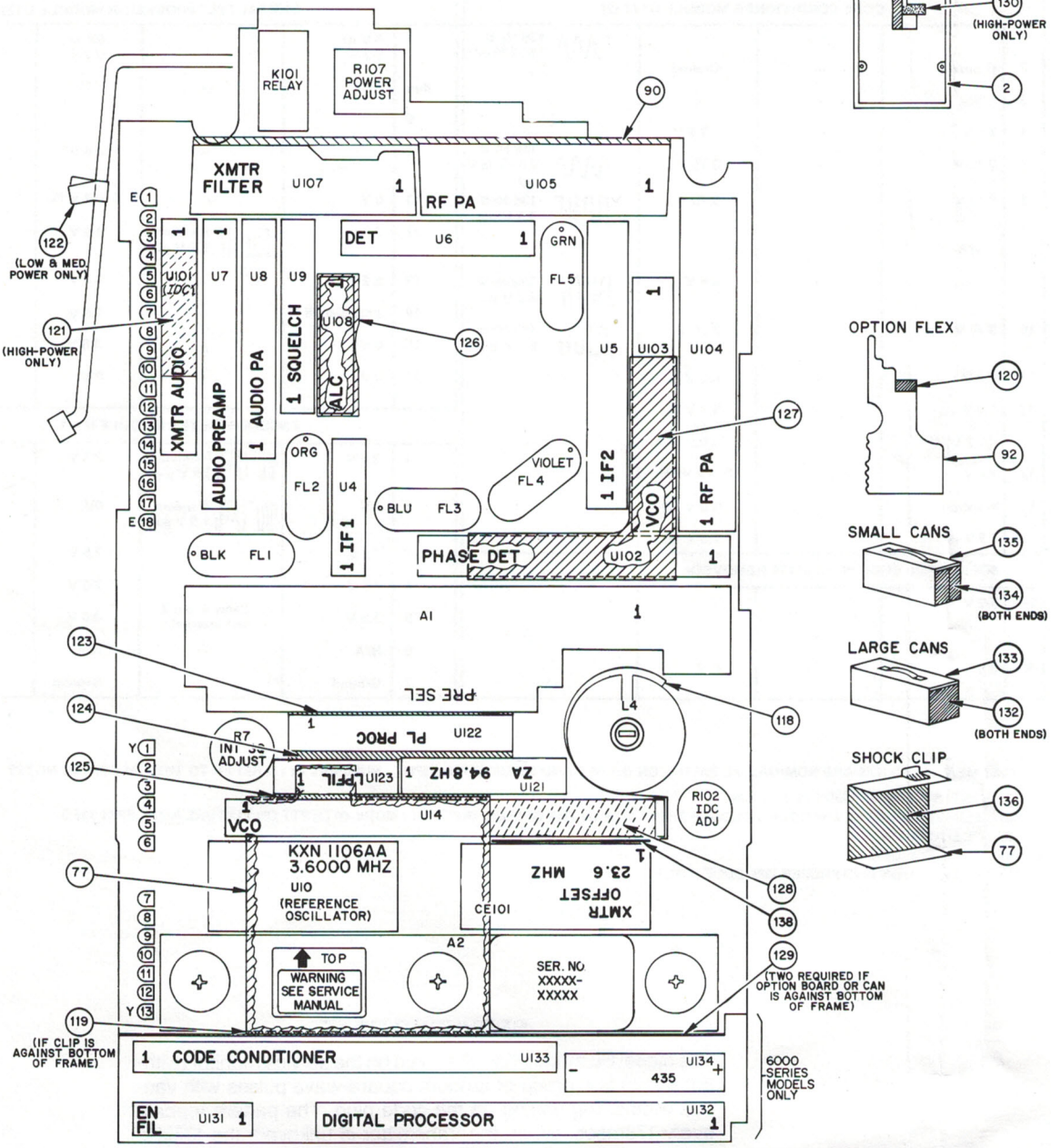

SEE PARTS LIST FOR PART NUMBERS

Exploded View Parts List

PLF-1849-B

ITEM NO.	MOTOROLA PART NO.	DESCRIPTION
1	NLN7475A	LABEL, Serial; domestic
2		BACK COVER KITS: NLN7322A, NLN7323A, NLN7324A, NLN7325A include:
		a. COVER, Back; (item 2)
	1505315F02	MX330
	1505315F03	MX340
	1505315F04	MX350
	1505315F05	MX360
		b. Items 3, 4, 5, 6, 8, 19, 26, 33, 68, 87, 99, & 104
3	0382210E15	SCREW, Captive
4	0405465C01	WASHER, Seal; .112 × .245 × .012
5	0405818D01	WASHER, Flat; .180 × .096 × .010
6		GASKET, "O" Ring;
	0105957C66	MX330
	0105957C67	MX340
	0105957C68	MX350
	0105957C69	MX360
7	0205785C01	NUT, Retainer; special
8	5405171E01	LABEL, Intrinsically safe
9	See Note	HOUSING, Connector; J402
10	3205427C04	BOOT
11	4505509C03	ACTUATOR
12	0305685F01	SCREW, Phillips; 2-64
13	4105395P01	SPRING, Latch
14	5505417C01	LATCH, Battery
15	0705528C01	BASE, Frame Support
16	0705830C02	SUPPORT, Battery Contact
17	3905421C05	CONTACT, Battery
18	0300138651	SCREW, Slotted; 2-56 × ⅛"
19	NLN7355A	LABEL, Freq. (Zones C & D)
20	See Note	FUSE (F401)
21	3805881D01	CAP, Fuse
22	NLN7561A	FLEX CIRCUIT, Control
23	See Note	CONNECTOR, Plug (J303)
24	See Note	SOCKET (J302)
25	0405342C02	WASHER, Steel
26	NLN7556A	LABEL, Frequency (Zones A & B)
27	4205506C01	STRAIN RELIEF, Snap-in
28	6405683F01	PLATE, Nut
29	See Note	SWITCH (S502)
30	See Note	RESISTOR (R308)
31	See Note	SWITCH (S303)
32	0405342C03	WASHER
33	6405535D06	INSULATOR, Ground Shield
34	3205295F01	GASKET
35	See Note	JACK (J301)
36	See Note	RESISTOR (R311A)
37		FRONT COVER KITS; includes: items 6, 18, 44, 49, 50, 51, 52, 53, 54, 57, 58, 59, 61, 95, 100, 101, and 102
	NLN7420A	MX330 Series (Lo/Med Power)
	NLN7421A	MX340 Series (Lo/Med Power)
	NLN7422A	MX350 Series (Lo/Med Power)
	NLN7423A	MX360 Series (Lo/Med Power)
	NLN7424A	MX340 Series (High Power)
	NLN7425A	MX350 Series (High Power)
	NLN7426A	MX360 Series (High Power)
38	7505589E03	PAD, Contour
39	0905604C07	SOCKET, Fuse; P/O item 43
40	4605461C01	STUD, Battery Contact
41	0282653D05	NUT, Mounting; special
42	0305714J01	SCREW, Phillips; 2-56
43		FLEX CIRCUIT, Power
	0105953C38	MX330 Series
	0105953C39	MX340 Series
	0105953C40	MX350 Series
	0105953C41	MX360 Series
44	1405424D04	INSULATOR, Teflon
45	0205543E01	NUT, Mounting
46	-----	Not Used
47	-----	Not Used
48		FRAME
	0105950L25	MX330 Series (NLN5298B)
	0105950L26	MX340 Series (NLN5299B)
	0105950L28	MX350 Series (NLN5300B)
	0105950L31	MX360 Series (NLN5301B)
49	0305466C01	SCREW, 4-40
50	0400009743	WASHER, No. 4 Split
51	0705423C01	BRACKET, Ring
	0705875C01	or BRACKET, Ring; for Hi Power Models
52	See Note	SPEAKER (LS401)
53	3505866N01	COVER, Speaker; felt
54		COVER
	0105957B51	MX330 Series
	0105959B38	MX340 Series
	0105959B39	MX350 Series
	0105959B40	MX360 Series
55	2805551D01	CONNECTOR, Plug (P403)
56	0305480E02	SETSCREW
57	0705779M01	BRACKET, Microphone
58	1405445G02	INSULATOR (for Hi Power Models)
58B	1045445G01	INSULATOR (for Low & Medium Power Models)
59	See Note	MICROPHONE (MK401)
60	0405342C04	WASHER, Rubber Seal
61	4305467C02	SPACER, Stand-Off
62	0400139731	WASHER
63	3305737J01	INSERT, Decal
64	0405342C05	WASHER, Mylar
65	3605510C01	KNOB, Short
	or 3605429G07	KNOB, Long
66	0405555C02	WASHER, Thrust
67	0405342C06	WASHER, Nylon
68	1305436E01	DECAL, Patent No.
69		ESCUTCHEON
	1305107E60	Multi-Channel Internal Carrier Squelch Models, with LED; no zone switch
	1305107E63	Multi-Channel External Carrier Squelch Models, with LED; no zone switch
	1305107E45	Multi-Channel Internal Carrier Squelch Models, with LED and 2-position zone switch
	1305107E46	Multi-Channel Internal Carrier Squelch Models, with LED and 3-position zone switch
	1305107E47	Multi-Channel Internal Carrier Squelch Models, with LED and 4-position zone switch
	1305107E62	Multi-Channel "Private-Line" Models, with Internal Carrier Squelch, LED, and no zone switch
	1305107E65	Multi-Channel "Private-Line" Models, with External Carrier Squelch, LED, and no zone switch
	1305107E48	Multi-Channel "Private-Line" Models, with Internal Carrier Squelch, LED, and 2-position zone switch
	1305107E49	Multi-Channel "Private-Line" Models, with Internal Carrier Squelch, LED, and 3-position zone switch
	1305107E50	Multi-Channel "Private-Line" Models, with Internal Carrier Squelch, LED, and 4-position zone switch
70	0305857C01	SCREW, Cap
71	0483799H04	WASHER, Insulating
72	1105092E02	ADHESIVE TAPE, Escutcheon
73	0205256C02	NUT, Speaker Jack
74	3605429G07	KNOB, Rotary switch
	or 3605577C01	KNOB, Squelch
75	0405342C01	WASHER, Thrust
76		ANTENNA, Refer to Electrical Parts List (NONREFERENCED ITEMS)
77	4205896J01	CLIP, Shock
78	See Note	LED (CR303)
79	1405545E01	INSULATOR
80	4305903N01	BUSHING ASSEMBLY, Antenna
81	-----	P/O item 48
82	2605767C01	SHIELD, Jack
83	0405294F01	WASHER
84	See Note	JACK (J401)
85	0105585H01	ASSEMBLY, Plug; spring; 2nd insulator
86	6405155M01	NUT PLATE, Right
87	7505585C01	PAD, Pressure
88	See Note	SWITCH (S304)
89		PAD, Front Cover
	7505544J01	MX330 Series, Low Power, and MX340 Series, High Power
	7505544J02	MX340 Series, Low Power, and MX350 Series, High Power
	7505544J03	MX350 Series, Low Power, and MX360 Series, High Power
	7505544J04	MX360 Series, Low Power
90	1405939D01	INSULATOR
91	-----	Not Used
92	NLN7562A	FLEX CIRCUIT, Option
93		BRACKET, Rail Mounting
	0705829C01	1-unit length (0.93")
	0705829C02	2-unit length (1.125")
	0705829C03	3-unit length (1.320")
	0705829C04	4-unit length (1.515")

	0705829C05	5-unit length (1.710")
	0705829C06	6-unit length (1.905")
	0705829C07	7-unit length (2.100")
	0705829C08	8-unit length (2.295")
	0705829C09	9-unit length (2.490")
94		FLEX, Frequency
	NLN7291A	4 - 12 Channels
	NLN7292A	8 - 24 Channels
	NLN7293A	12 - 36 Channels
	NLN7294A	16 - 48 Channels
95	-----	Not Used
96	7505890C01	PAD, "Digital PL" Contour
97	3205428C01	BOOT
98		INSULATOR
	1405576E02	MX330 Series
	1405576E03	MX340 Series
	1405576E04	MX350 Series
	1405576E05	MX360 Series
99	-----	Not Used
100	3705412F04	TUBING, Flexible (for High Power Models)
	or 3705412F02	TUBING, Flexible (for Low & Medium Power Models)
101	4705143E01	PIPE, Sound (High Power Models)
	4705143E03	PIPE, Sound (Low Power Models)
102	7505705D01	PAD (High Power Only)
103	6405782J01	NUT PLATE, Left
104	-----	Not Used
105	0405126L01	SEAL
106	0405757E03	SEAL
107	0405757E01	SEAL, Rubber
108	3205255G01	SEAL, PTT
109	7505191E01	BOOT, Speaker
110	0482519J01	WASHER, Sponge Seal
111	1482392E07	INSULATOR, Speaker Lug (Qty 2)
112	4305358G01	SEAL, Insert (for Squelch Control)
113	4305359G01	SEAL, Insert (for PL Switch)
114	-----	Not Used
115	See Note	SWITCH, Toggle (2-position)
116	See Note	SWITCH, Toggle (3-position)
117	See Note	SWITCH, Rotary (4-position)
118	4205741H01	CLIP, Ground
119	7505897J01	PAD, Shock
120	1405243L01	INSULATOR, White
121	7505302E02	PAD, U101 (High Power Model)
122	4205859H01	CLIP, Cable (Low & Medium Power only)
123	1405305G01	INSULATOR, White
124	7505241K01	PAD, Grey
125	1405582K01	INSULATOR, Clear
126	0705778D01	BOOT, ALC
127	4205360E01	CLIP, PLL
128	1405943L02	INSULATOR, VCO. P/O VCO. See Note
129	1407049H01	INSULATOR, Grey
130	1405243L01	INSULATOR, Back Cover (High Power only)
131	-----	Not Used
132	1482392E03	INSULATOR, Large can
133	-----	CAN, Shield
134	1110033F21	INSULATOR, Small Can
135	-----	CAN, Shield
136	1405305G04	INSULATOR, Shock clip
137	4205624L01	STRAP, Cable
138	1405305G04	INSULATOR, Stick-on
139	3700132026	TUBING, Shrink

NOTE: Refer to Electrical Parts List for part number and description.

MODULE A2 DISASSEMBLY

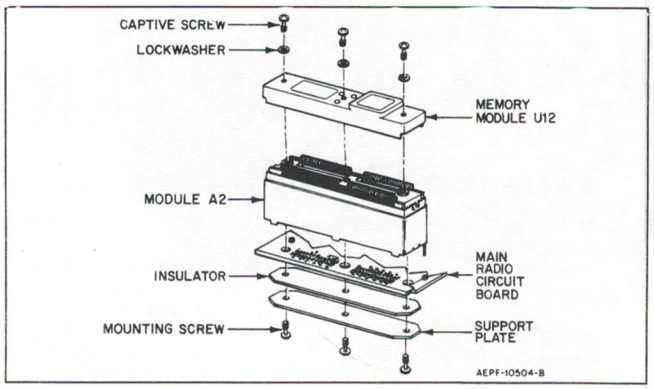

Filler Pads

PLF-1846-O

REFERENCE SYMBOL	MOTOROLA PART NO.	DESCRIPTION
	7505117E02	2-Unit length (1.125"), for growth in frame
	7505117E03	3-Unit length (1.320"), for growth in frame
	7505117E04	4-Unit length (1.515"), for growth in frame
	7505117E05	5-Unit length (1.710"), for growth in frame
	7505117E06	6-Unit length (1.905"), for growth in frame
	7505117E07	7-Unit length (2.100"), for growth in frame

NOTE: Filler pads listed are used to fill empty areas not currently in use.

TYPICAL EXTERNAL CARRIER SQUELCH RADIO 4-12 CHANNELS

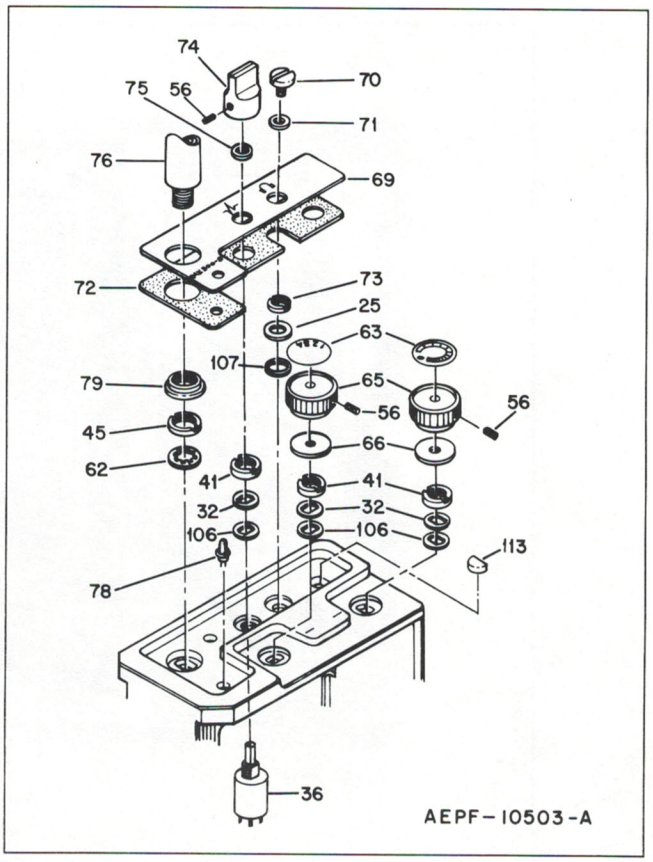

NLE8941A, 8942A, 8943A (1W)
NLE8981A, 8982A, 8983A (2W)
(REVISIONS SHOWN IN RED)

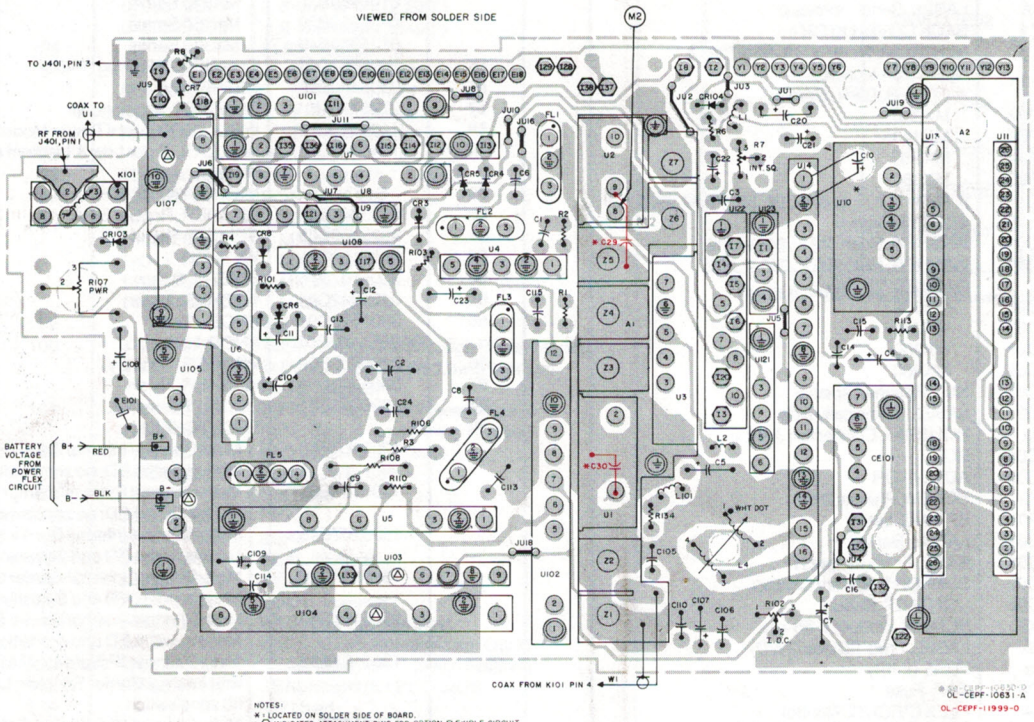

NOTES:
*= LOCATED ON SOLDER SIDE OF BOARD.
1. ○ INDICATES ATTACHMENT PINS FOR OPTION FLEXIBLE CIRCUIT THE "1" PREFIX IDENTIFIES POINTS ON THAT CIRCUIT.
2. ◎ INDICATES GUIDE PINS ON MODULES.
3. △ INDICATES "PUSH OUT" HOLES TO FACILITATE REMOVAL OF MODULE FROM BOARD.

NLE8951A, 8952A, 8953A (5W)
(REVISIONS SHOWN IN RED)

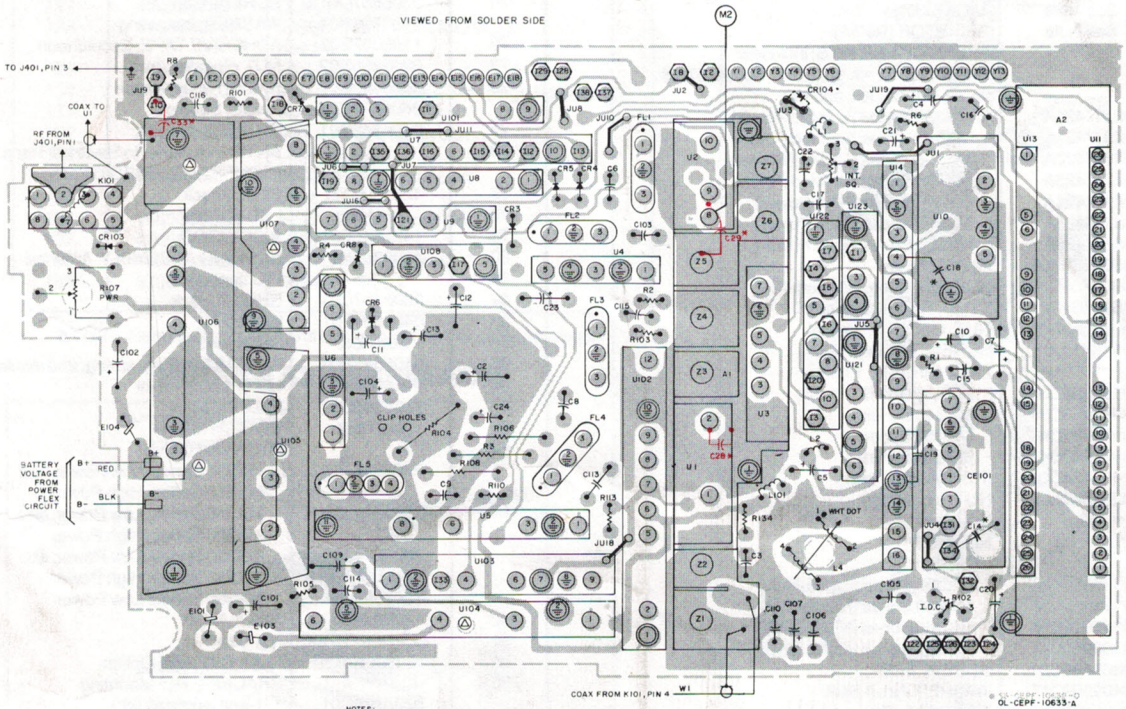

NOTES:
*= LOCATED ON SOLDER SIDE OF BOARD.
1. ○ INDICATES ATTACHMENT PINS FOR OPTION FLEXIBLE CIRCUIT THE "1" PREFIX IDENTIFIES POINTS ON THAT CIRCUIT.
2. ◎ INDICATES GUIDE PINS ON MODULES.
3. △ INDICATES "PUSH OUT" HOLES TO FACILITATE REMOVAL OF MODULE FROM BOARD.

DPL VOLTAGE MEASUREMENTS

TEST PRECAUTION

FOR ENCODE (XMIT) TESTS, DO NOT TRANSMIT INTO SERVICE MONITOR RF INPUT. USE WATTMETER AND MONITOR ON RECEIVE PORTION OF SERVICE MONITOR VIA ANTENNA.

PIN NO.	ENCODE (XMIT) DC VOLTAGE	ENCODE (XMIT) WAVEFORM & AC V	DECODE (RECEIVE) DC VOLTAGE	DECODE (RECEIVE) WAVEFORM & AC V
CODE CONDITIONER MODULE U133 (2)				
1	---	---	---	135 Hz @ 120-270 mV p-p
2	Ground	---	Ground	
3	N/A	---	---	---
4	7.5 V	---	7.5 V	---
5	3.75 V	---	3.75 V	135 Hz @ 0.6 - 1.35 V p-p
6	3.75 V	---	3.75 V	135 Hz@ 6.1 V p-p
7	N/A	---	---	---
8	---	---	2.6 V	135 Hz @ 5.2 V p-p
10	3.75 V	---	3.75 V	135 Hz @ 6.1 V p-p
11	5.2 V	---	5.2 V	---
12	5.2 V (3) or <0.2 V (4)	---	5.2 V (3) or <0.2 V (4)	---
13	<0 V	---	0, 5.2 V (5)	---
14	≈0 V (3)	---	≈0 V (3)	---
	7.5 V (4)	---	7.5 V (4)	---
SOCKET FOR CODE PLUG (U134 REMOVED)				
1-9	5.2 V	---	5.2 V	---
10	0 V		0 V	

PIN NO.	ENCODE (XMIT) DC VOLTAGE	ENCODE (XMIT) WAVEFORM & AC V	DECODE (RECEIVE) DC VOLTAGE	DECODE (RECEIVE) WAVEFORM & AC V
DIGITAL "PL" PROCESSOR MODULE U132				
1 thru 9	0 V or 5.2 V (1)	---	0V or 5.2 V (1)	---
10	---	---	2.6 V	135 Hz@ 5.2 V p-p
11	0 V	---	0, 5.2 V (5)	---
12	2.6 V	(1) Random 5.2 V p-p	2.6 V	135 Hz@ 5.2 V p-p
13	5.2 V	---	5.2 V	---
14	Less than .8 V	---	7.5 V	---
15	0 V	---	6.8 V	---
17	0 V	---	0 V	---
ENCODER FILTER MODULE U131				
1	2.6 V	(1) Random 3.0 V p-p	2.6 V	135 Hz@ 3.0 V p-p
2	0 V	(1) Random 1.0 V p-p	0V	135 Hz@ 1.0 V p-p
3	7.5 V	---	7.5 V	---
4	7.5 V	---	7.5 V	---
5	3.5 V	Same as pin 2 but inverted	3.5 V	Same as pin 2 but inverted
6	N/A	---	N/A	---
7	Ground	---	Ground	---

TEST MEASUREMENTS ARE NOMINAL; PL SWITCH ON OR OFF AND NO CARRIER INPUT. NUMBERS IN ( ) REFER TO THE FOLLOWING NOTES:

(1) DETERMINED BY CODE PLUG U134.
(2) SLN6413A DIGITAL ENCODER-DECODER SHOULD BE IN THE DECODE (RECEIVE) MODE WITH PTT ON FIXTURE NOT DEPRESSED.
(3) PL SWITCH ON.
(4) PL SWITCH OFF.
(5) PL SWITCH ON AND PROPER DPL CODE INPUT.

EPF-7459-C

SERVICING NOTE

The digital PL modulation observed on the service monitor (without audio) is a group of random square-wave pulses with various widths, depending on the code plug. The pattern repeats every 178msec. When the transmitter is unkeyed, the 135kHz sine wave turn-off code appears at a reduced level for 120msec. Measure the pulse peak-to-peak amplitude for deviation.

DPL BOARD

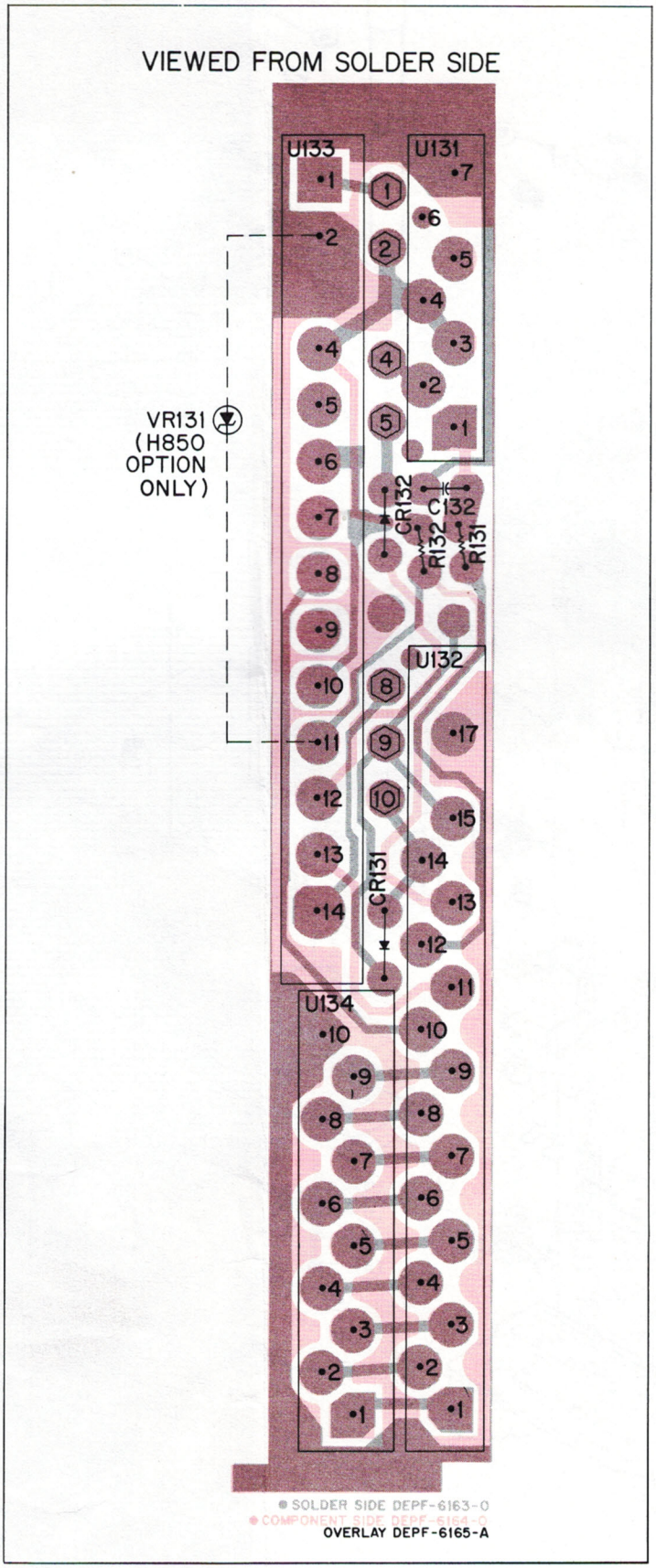
VIEWED FROM SOLDER SIDE
U133
U131
U132
U134
VR131
(H850
OPTION
ONLY)
CR132
C132
R132
R131
CR131
SOLDER SIDE DEPF-6163-0
COMPONENT SIDE DEPF-6164-0
OVERLAY DEPF-6165-A