TPN1154A POWER SUPPLY SCHEMATIC DIAGRAM

(Extracted from the MCX100 Service Manual)

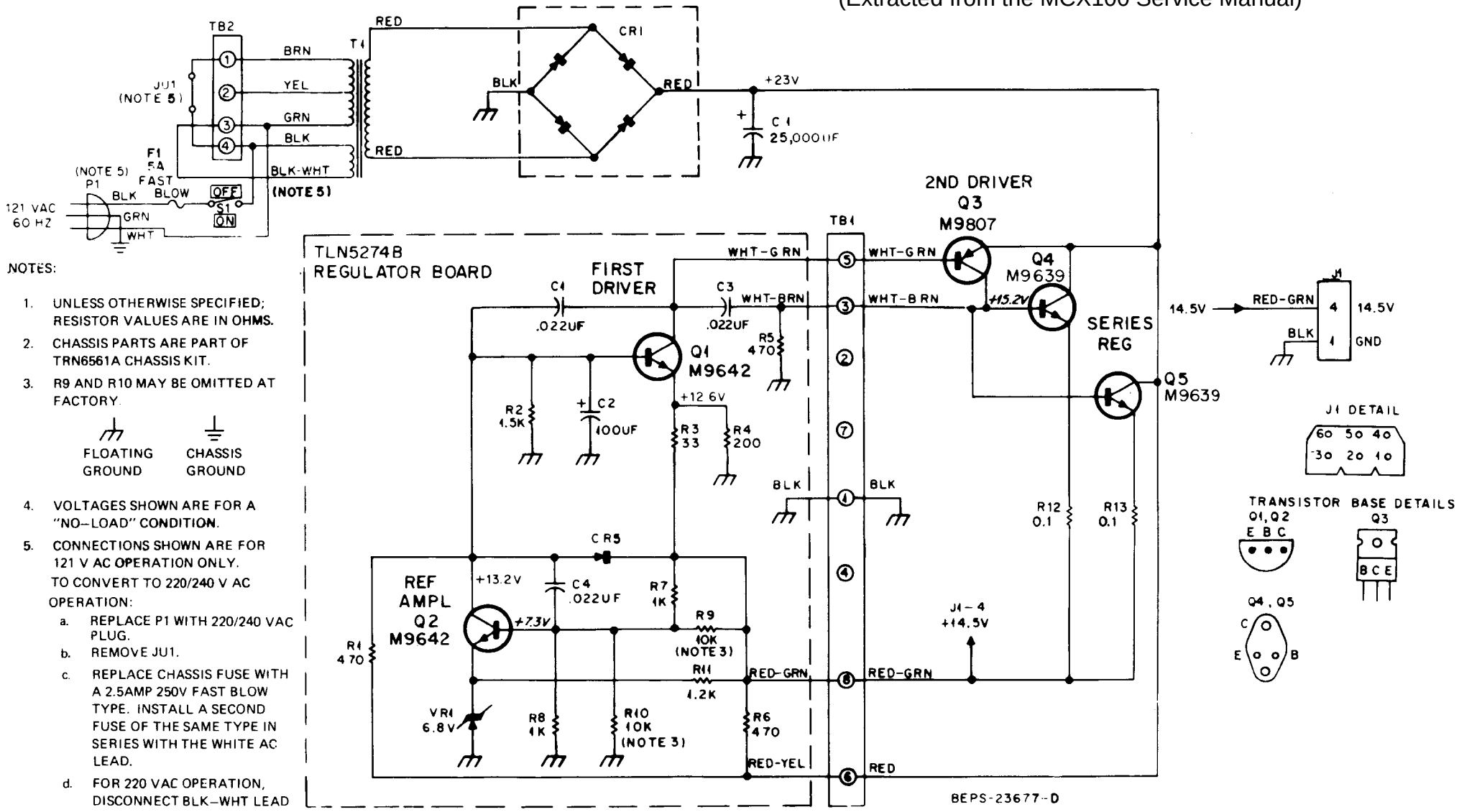

NOTES:

1. UNLESS OTHERWISE SPECIFIED; RESISTOR VALUES ARE IN OHMS.
2. CHASSIS PARTS ARE PART OF TRN6561A CHASSIS KIT.
3. R9 AND R10 MAY BE OMITTED AT FACTORY.

FLOATING GROUND — CHASSIS GROUND

4. VOLTAGES SHOWN ARE FOR A "NO-LOAD" CONDITION.
5. CONNECTIONS SHOWN ARE FOR 121 V AC OPERATION ONLY.

   TO CONVERT TO 220/240 V AC OPERATION:

   a. REPLACE P1 WITH 220/240 VAC PLUG.
   b. REMOVE JU1.
   c. REPLACE CHASSIS FUSE WITH A 2.5AMP 250V FAST BLOW TYPE. INSTALL A SECOND FUSE OF THE SAME TYPE IN SERIES WITH THE WHITE AC LEAD.
   d. FOR 220 VAC OPERATION, DISCONNECT BLK-WHT LEAD FROM TB2-3 AND RECONNECT TO TB2-2.
   e. FOR 240 VAC OPERATION, DISCONNECT BLK-WHT LEAD FROM TB2-3 AND RECONNECT TO TB2-1.