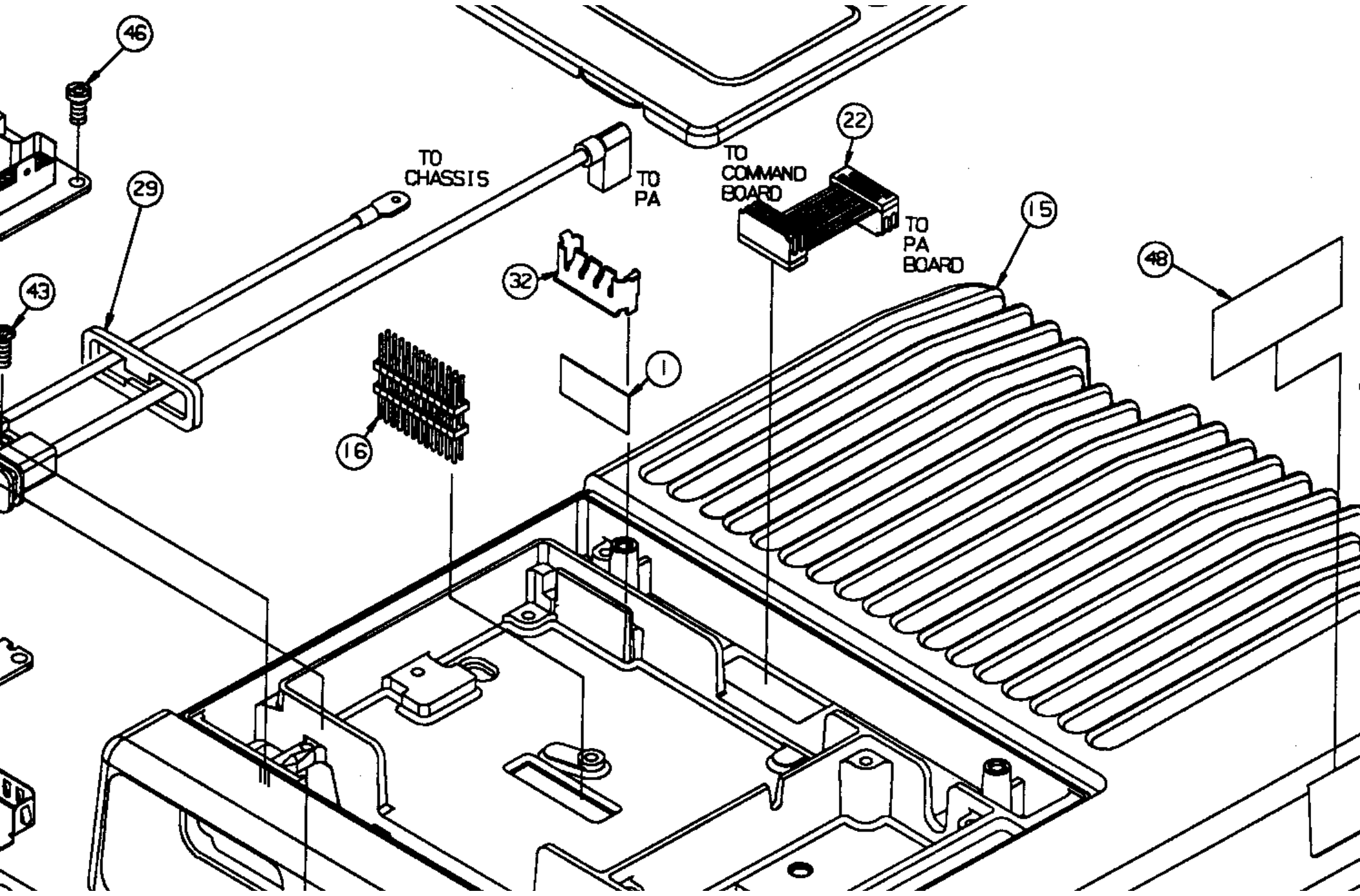
46
29
43
TO
CHASSIS
TO
PA
22
TO
COMMAND
BOARD
TO
PA
BOARD
15
48
32
1
16