SCOPE AMPLIFIER BOARD (A04)

MODEL TRL4022A
SCHEMATIC DIAGRAM, CIRCUIT BOARD
DETAIL, AND PARTS LIST

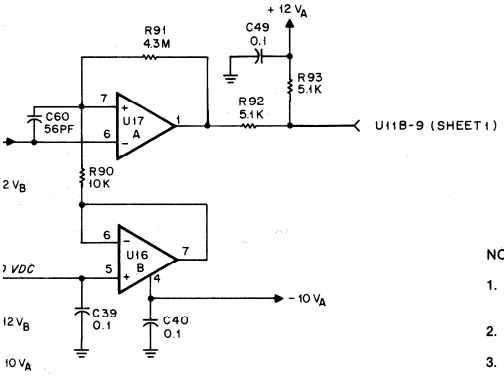

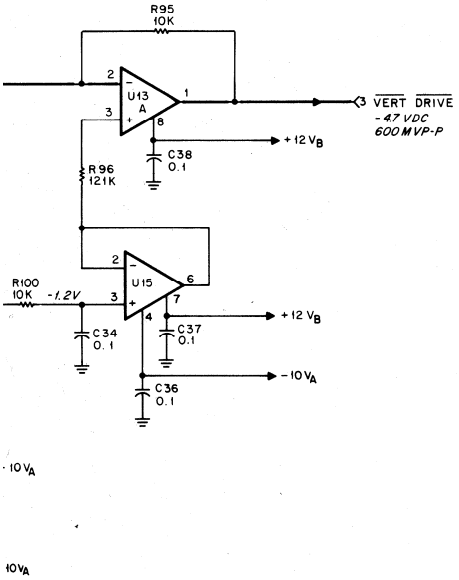

NOTES:

1. Unless otherwise indicated, all resistor values are in ohms, 1%; all capacitor values are microfarads; and inductors are in microhenries.
2. IC types are TTL and CMOS devices.
3. Types and connections for the integrated circuits used on this board are as follows:

Reference Designation	Mfgr's Description	+12 V_A (+12 V_B)	−10 V_A	−5 V_B	+5 V_A	GND	−12 V
U1	Quad Comparator	3	12				
U2	Dual Op-Amp	8	4				
U3	Quad Analog Switch	14		7			
U4	Quad Analog Switch	14				7	
U5	Op Amp	7	4				
U6	Op Amp	7	4				
U7	Voltage Comparator	8	4			1	
U8	Dual-D Dlip-Flop	14				7	
U9	Dual Retrig Monostable	16				8	
U10	Triple 3-Input NOR	14				7	
U11	Quad 2-Input NAND	14				7	
U12	Dual Retrig Monostable	16				8	
U13	Dual Op Amp	(8)	4				
U14	NPN/PNP Trans Array		16				
U15	Op Amp	(7)	4				
U16	Dual Op Amp	(8)	4				
U17	Quad Comparator	3	12				
U18	Neg Voltage Reg					1	2
U19	Dual Op Amp	8	4				
U20	Pos Voltage Reg	3				2	
U21	Quad 2-Input NAND	14		7			
U22	Triple 3-Input NOR				14	7	
U23	Octal F-F Comm Clk				20	10	
U24	Neg Voltage Reg						2

EEPS-36260-A
(SHEET 2 OF 2)

SCOPE AMPLIFIER BOARD

*Motorola No. **PEPS-36844-O***
(Sheet 3 of 3)
8/12/83-PHI

RF SYNTHESIZER (A05)

MODEL RTC1001B

1. DESCRIPTION

The rf synthesizer provides an rf signal source for the frequency range from 10 kHz to 1 GHz in 100 Hz steps. The output frequency is programmed by the microprocessor through the rf control bus and is phase-locked to the 10 MHz frequency standard. A reference divider in the module produces outputs of 500 kHz, 50 kHz, 1 kHz, 100 Hz, and 50 Hz each having the same accuracy as the frequency standard.

2. THEORY OF OPERATION

2.1 GENERAL

2.1.1 Four phase-locked loops are used to generate the output frequency; a 60.5 MHz loop; a 310-440 MHz loop; the 500 MHz-1000 MHz loop; and the 550 MHz loop. Two of these loops contain programmable dividers, controlled by the microprocessor for varying the frequency. The 310-440 MHz loop is controlled by the four most significant digits of the required frequency and operates in discrete 50 kHz increments. The 60.5 MHz loop is controlled by the three least significant digits of the required frequency and operates in discrete 50 Hz increments.

2.1.2 The output is derived from three sources, covering the ranges of 10 kHz to 250 MHz, 250 MHz to 500 MHz, and 500 MHz to 1000 MHz. In the first range, 10 kHz to 250 MHz, the output is derived by mixing the fixed 550 MHz signal with 500-1000 MHz signal programmed for frequencies from 550.01 MHz to 800 MHz. For the second range, 250 to 500 MHz, the output is the result of a divide-by-two operation on the 500-1000 MHz signal. The final range is the direct output of the 500-1000 MHz loop. The appropriate frequency source is switched to the SYNTH RF output by the Output Select switch.

2.2 310-440 MHz PHASE-LOCKED LOOP

A single 310-440 MHz VCO (Voltage Controlled Oscillator) is phase-locked to the 50 kHz reference input using a loop. The VCO output is divided down to 50 kHz using a programmable two modulus prescaler and divider. Programming of the divider is controlled by the microprocessor to give output frequencies from 310 to 440 MHz in 50 kHz steps.

2.3 60.5 MHz PHASE-LOCKED LOOP

The 60.5 MHz loop is programmable over a ±100 kHz range in 50 Hz increments. The 60.5 MHz VCO output is mixed with a 50 MHz signal from the 550 MHz loop. A programmable divider following the mixer divides the 10.5 MHz ±100 kHz signal down to the 50 Hz reference frequency. A comparison between the divider output and the reference signal by the phase/frequency detector results in an error voltage to the VCO which maintains the phase lock.

2.4 550 MHz PHASE-LOCKED LOOP

A fixed frequency of 550 MHz is obtained by dividing the 550 MHz VCO by 55 to obtain 10 MHz. The 10 MHz from the divider is compared with the 10 MHz frequency standard in the phase/frequency detector. The resulting error signal is filtered and used to correct the 550 MHz VCO to maintain the phase lock. A voltage controlled attenuator follows the 550 MHz output to control the output level of the generator output for frequencies below 1 MHz. The leveling loop in the rf input module provides the ALC VOLT control signal to maintain the required output level at the front panel rf jack.

2.5 500-1000 MHz PHASE-LOCKED LOOP

The 500-1000 MHz output is locked to either the sum or the difference of the 310-440 MHz and 60.5 MHz loop output frequencies. In the locked condition, mixing the divide-by-two output of the 500-1000 MHz VCO with the 310-440 MHz signal gives a difference frequency equal to the 60.5 MHz output. There are two frequencies of the divide-by-two output, the 310-440 MHz frequency plus 60.5 MHz and the 310-440 MHz frequency minus the 60.5 MHz frequency. One of the signals is mixed down to the correct frequency. The sense of the loop is inverted for one signal compared to

the other. Thus, the phase switch following the phase/frequency detector determines the frequency the loop locks on.

2.6 MODULATION CONTROL

Modulation of the tuning voltage for the 60.5 MHz VCO provides the frequency modulation of the rf output. Since the modulation sensitivity changes by a factor of two when the 250-500 MHz source is selected, the modulation control provides programmable gain control to maintain constant sensitivity at the FM MOD input. Additionally, the wideband modulation mode requires a gain of four beyond that for the narrowband mode. Thus, under control of the microprocessor, the modulation control selects gains of 1, 2, 4, and 8 for the FM MOD input. Input modulation sensitivities are 5 kHz/volt and 20 kHz/volt for narrow and wideband FM input.

2.7 MODULE CONTROL

Control information is latched into four-bit control latches which are loaded by the microprocessor through the rf control bus. The four-bit RF ADD BUS Ø-3 data is decoded by the address decoder to determine into which control latch the four-bit RF DATA BUS Ø-3 data is to be stored. Synchronization of the data transfer is the function of the RF BUS EN line. One control latch output, LO/HI BAND SEL, is applied to the rf input module to control the frequency range of the output amplifier.

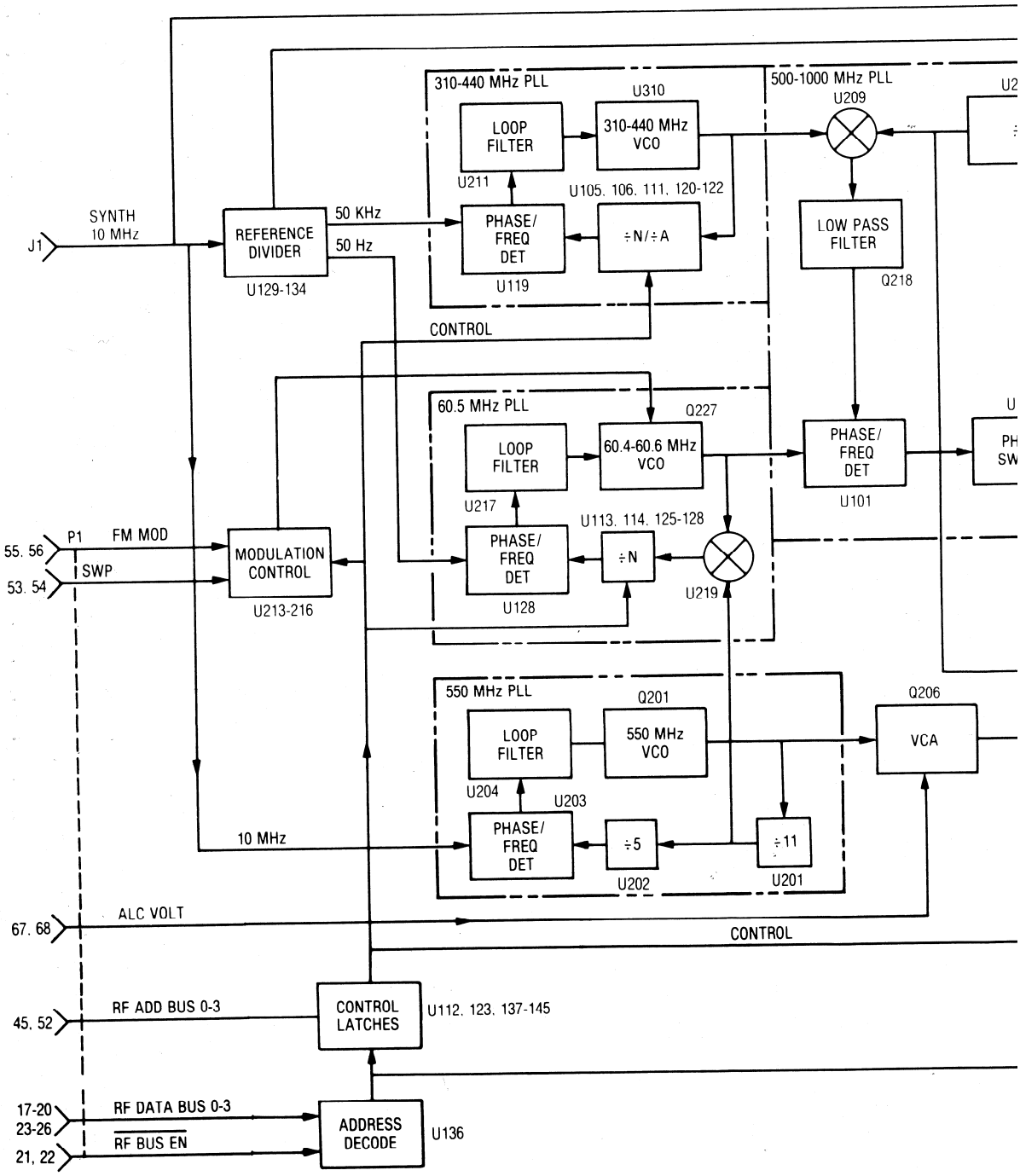

Figure 1. RF Synthesizer Functional Block Diagram

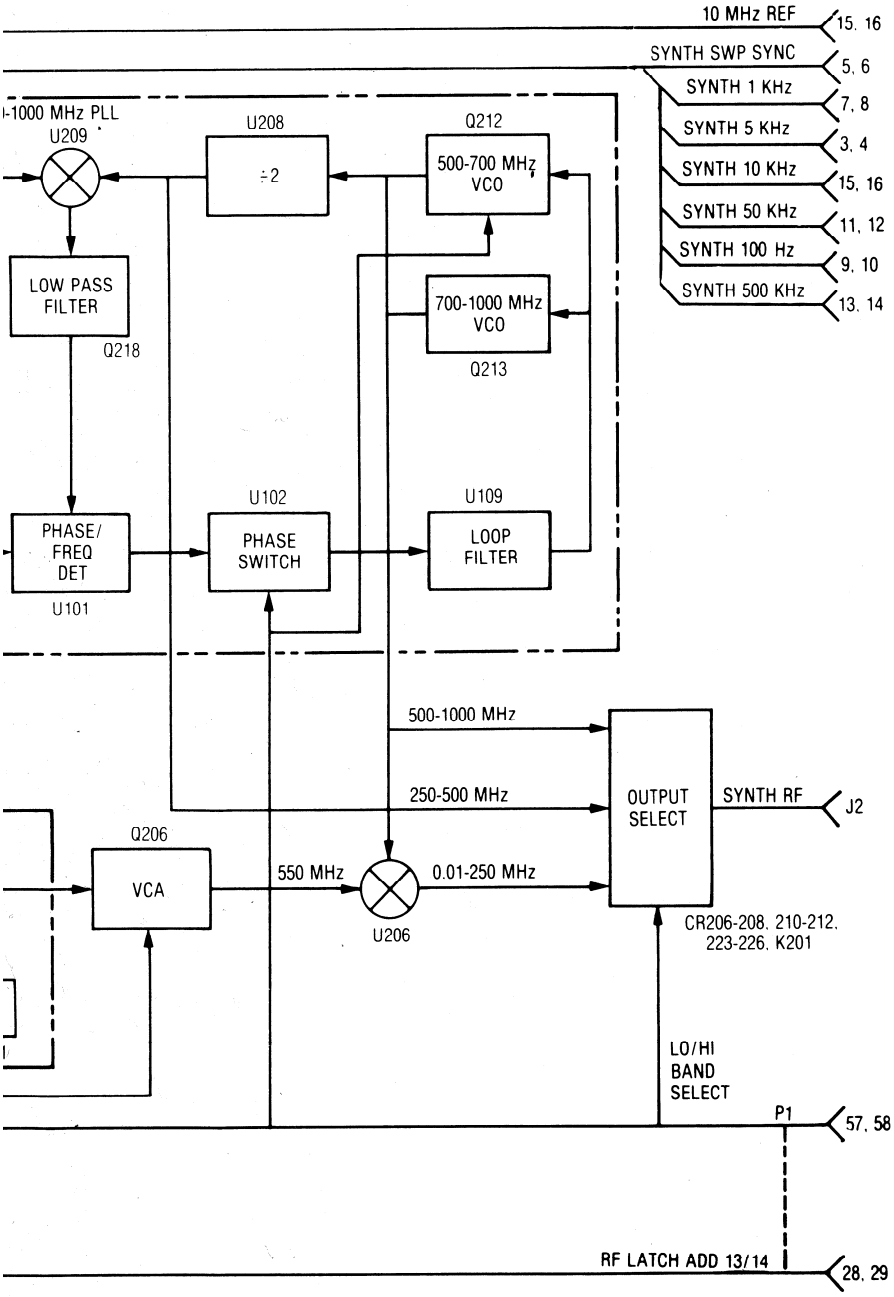

nctional Block Diagram

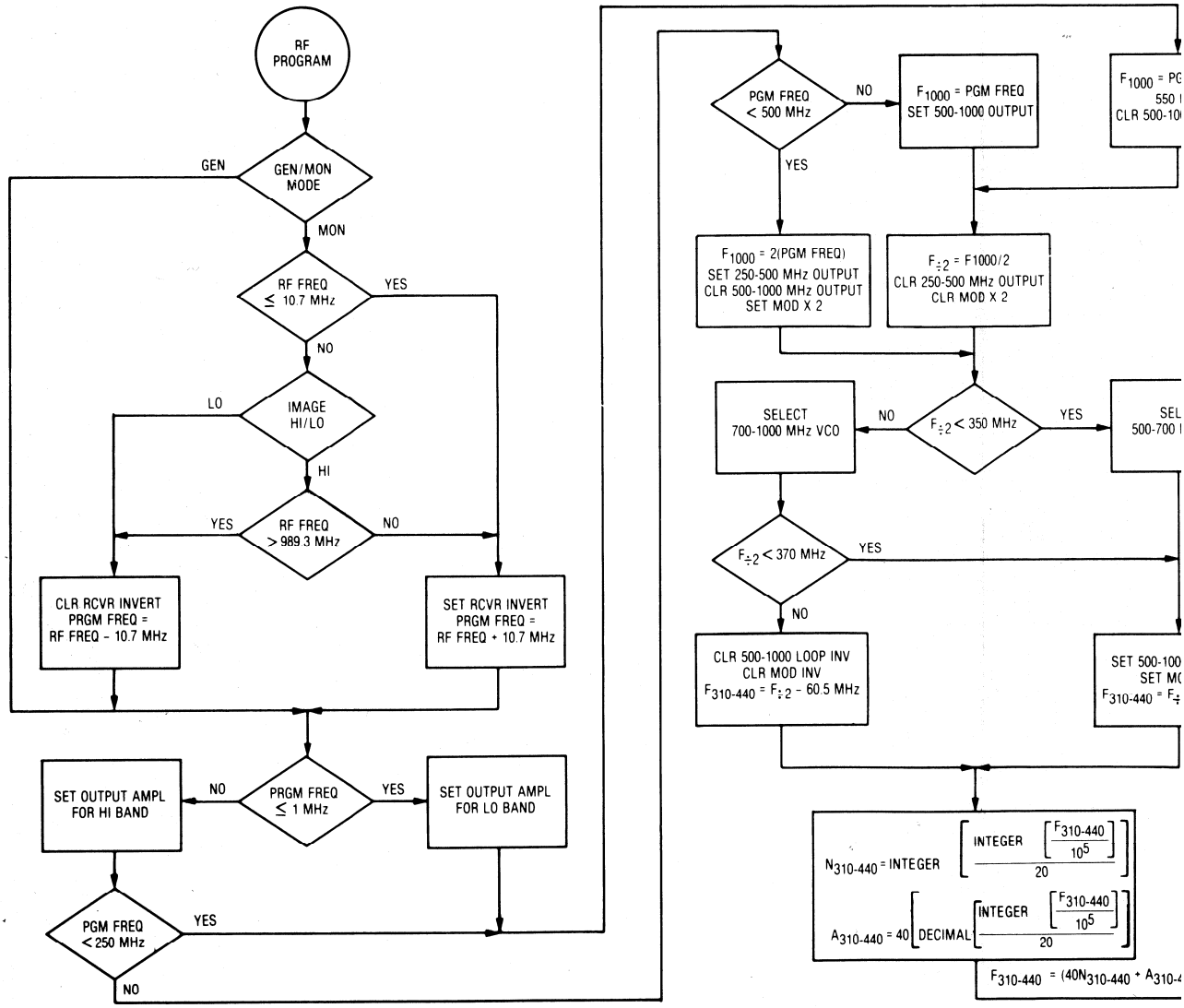

Figure 2. Frequency Programming Flow Dia

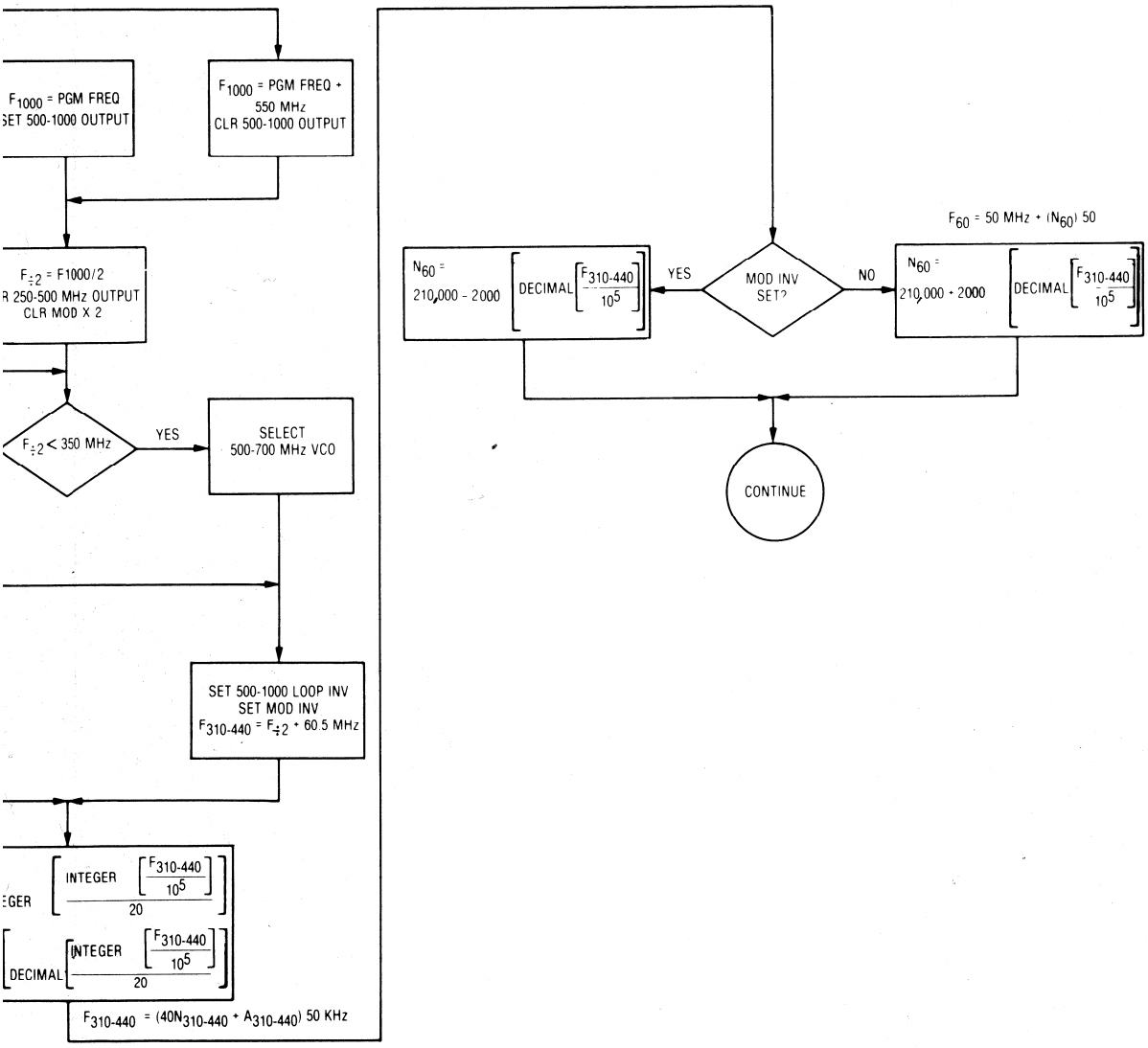

quency Programming Flow Diagram

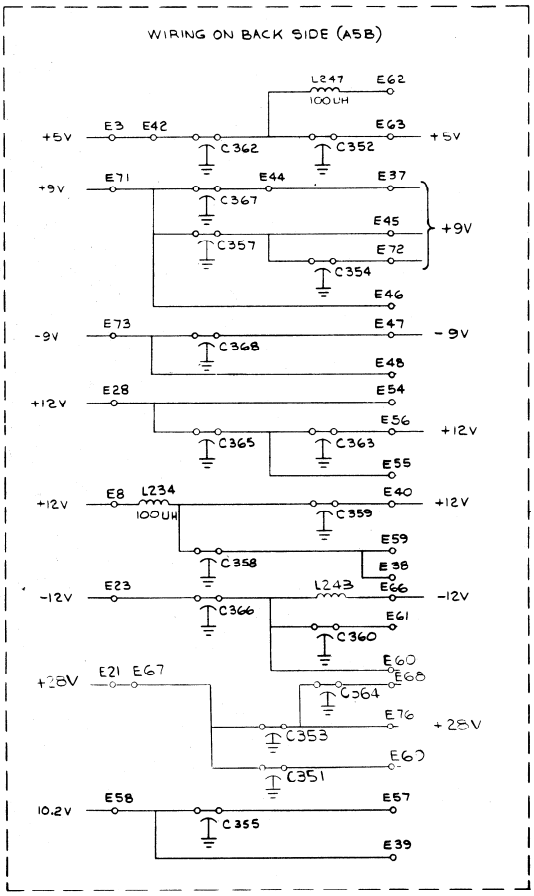
WIRING ON BACK SIDE (A5B)
L247
100 UH
E62
+5V
E3
E42
C362
C352
E63
+5V
+9V
E71
E44
E37
C367
E45
C357
E72
C354
+9V
E46
-9V
E73
E47
C368
-9V
E48
+12V
E28
E54
E56
C365
C363
+12V
E55
+12V
E8
L234
100 UH
E40
C359
+12V
E59
C358
E38
-12V
E23
L243
E66
C366
-12V
E61
C360
E60
+28V
E21
E67
E68
C364
E76
C353
+28V
E67
C351
10.2V
E58
E57
C355
E39

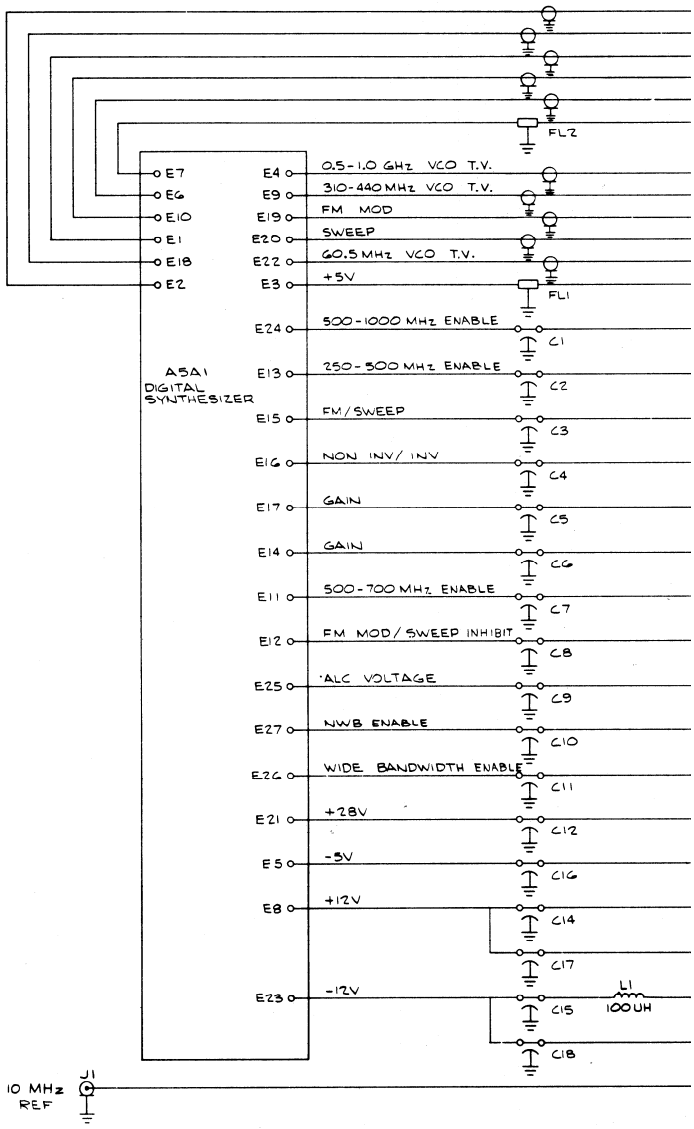
FL2
E7
E6
E10
E1
E18
E2
E4
0.5-1.0 GHz VCO T.V.
E9
310-440 MHz VCO T.V.
E19
FM MOD
E20
SWEEP
E22
60.5 MHz VCO T.V.
E3
+5V
FL1
E24
500-1000 MHz ENABLE
C1
A5A1
DIGITAL
SYNTHESIZER
E13
250-500 MHz ENABLE
C2
E15
FM/SWEEP
C3
E16
NON INV/INV
C4
E17
GAIN
C5
E14
GAIN
C6
E11
500-700 MHz ENABLE
C7
E12
FM MOD/SWEEP INHIBIT
C8
E25
ALC VOLTAGE
C9
E27
NWB ENABLE
C10
E26
WIDE BANDWIDTH ENABLE
C11
E21
+28V
C12
E5
-5V
C16
E8
+12V
C14
C17
E23
-12V
L1
100 UH
C15
C18
10 MHz
REF
J1

RF SYNTHESIZER (A05)

MODEL RTC1001B
SCHEMATIC DIAGRAM, CIRCUIT BOARD
DETAIL, AND PARTS LIST

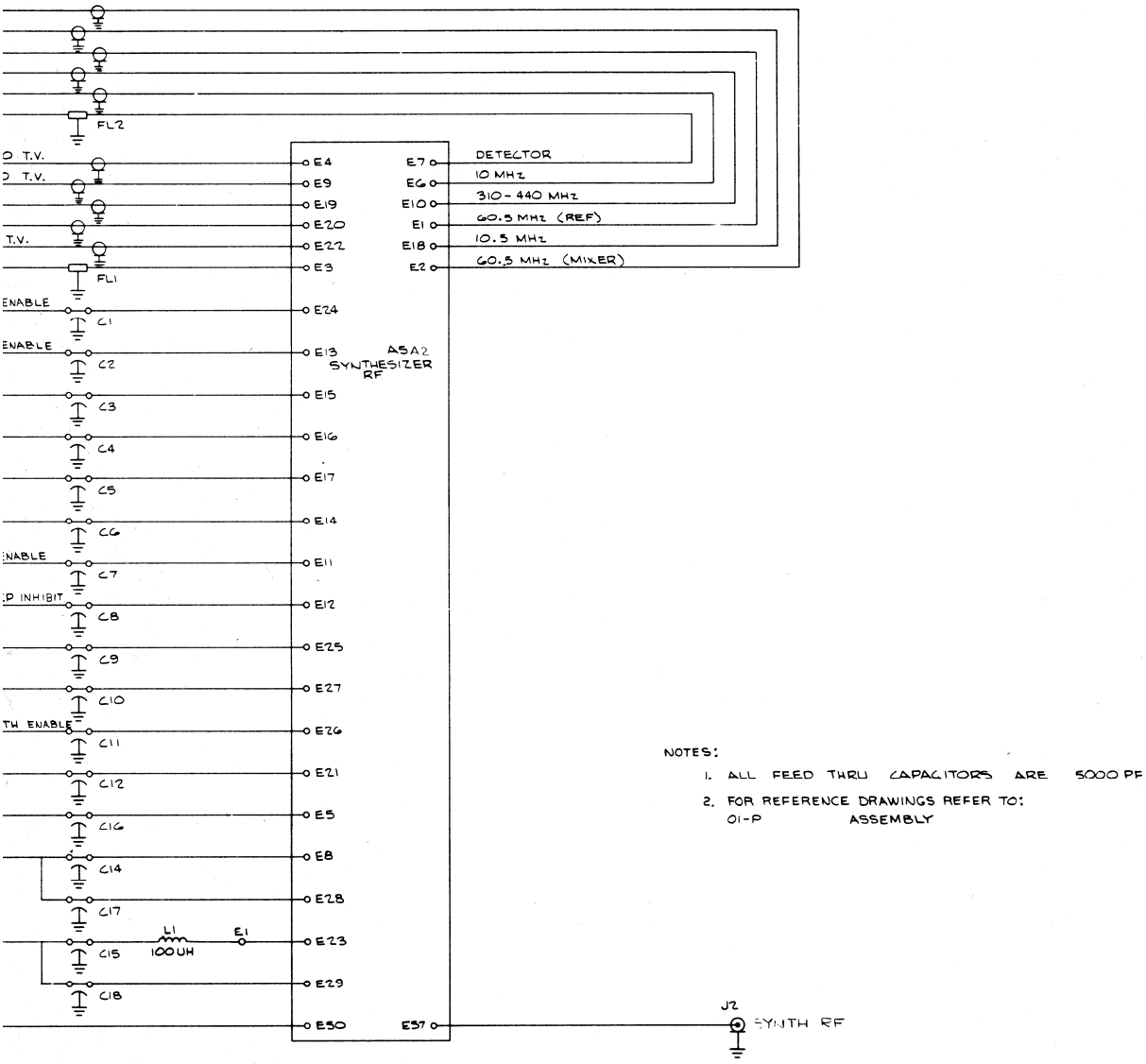

NOTES:

1. ALL FEED THRU CAPACITORS ARE 5000 PF
2. FOR REFERENCE DRAWINGS REFER TO:
   01-P ASSEMBLY

RF SYNTHESIZER

Motorola No. ***PEPS-37063-O***
(Sheet 1 of 2)
8/12/83-PHI

RF SYNTHESIZER (A05)

MODEL RTC1001B
SCHEMATIC DIAGRAM, CIRCUIT BOARD DETAIL, AND PARTS LIST

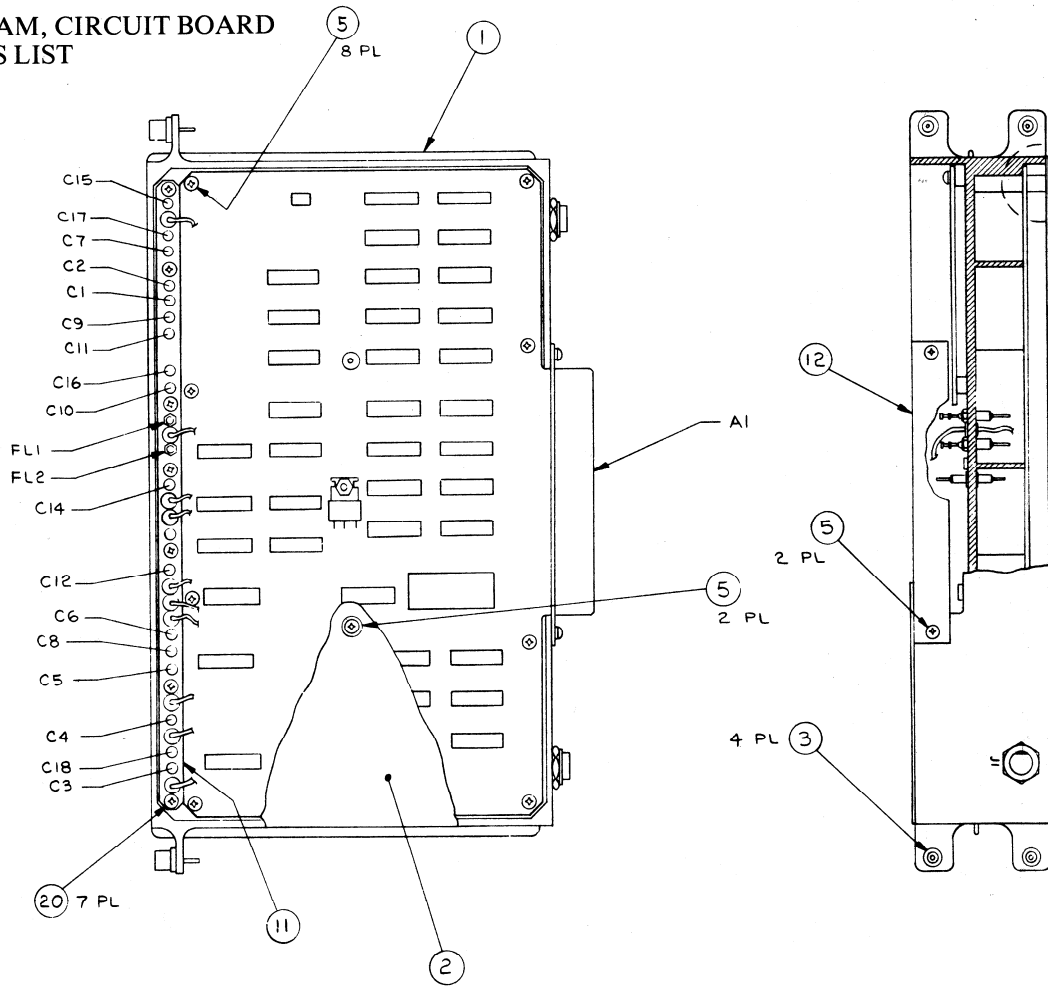

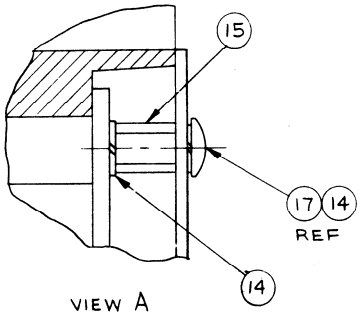

VIEW A
SCALE: 4/1
19 PLACES

parts list

RTC1001B Synthesizer Kit

REFERENCE SYMBOL	MOTOROLA PART NO.	
		capacitor
C1 thru 12	21-82543H03	5000
C14 thru 17	21-82543H03	5000
		filter:
FL1	91-87679C01	1500 pF @
		coil, rf:
L1	24-80369A37	choke; 10
REF. NO.		**MECHANICAL P**
2	15-80335A37	COVER,
3	5-84500B03	EYELET,
4	42-84284B01	RETAINE
5	3-138804	SCREW,
10	15-80335A36	COVER,
11	26-80370A67	SHIELD
12	64-80370A68	PLATE, c
13	3-139581	SCREW,
14	4-114583	LOCKWA
15	43-80370A69	SPACER,
16	30-80377A09	CABLE, c
17	3-136786	SCREW,
20	3-139012	SCREW,
21	29-80377A75	TERMIN

*Motorola No. **PEPS-37063-O***
(Sheet 2 of 2)
8/12/83-PHI

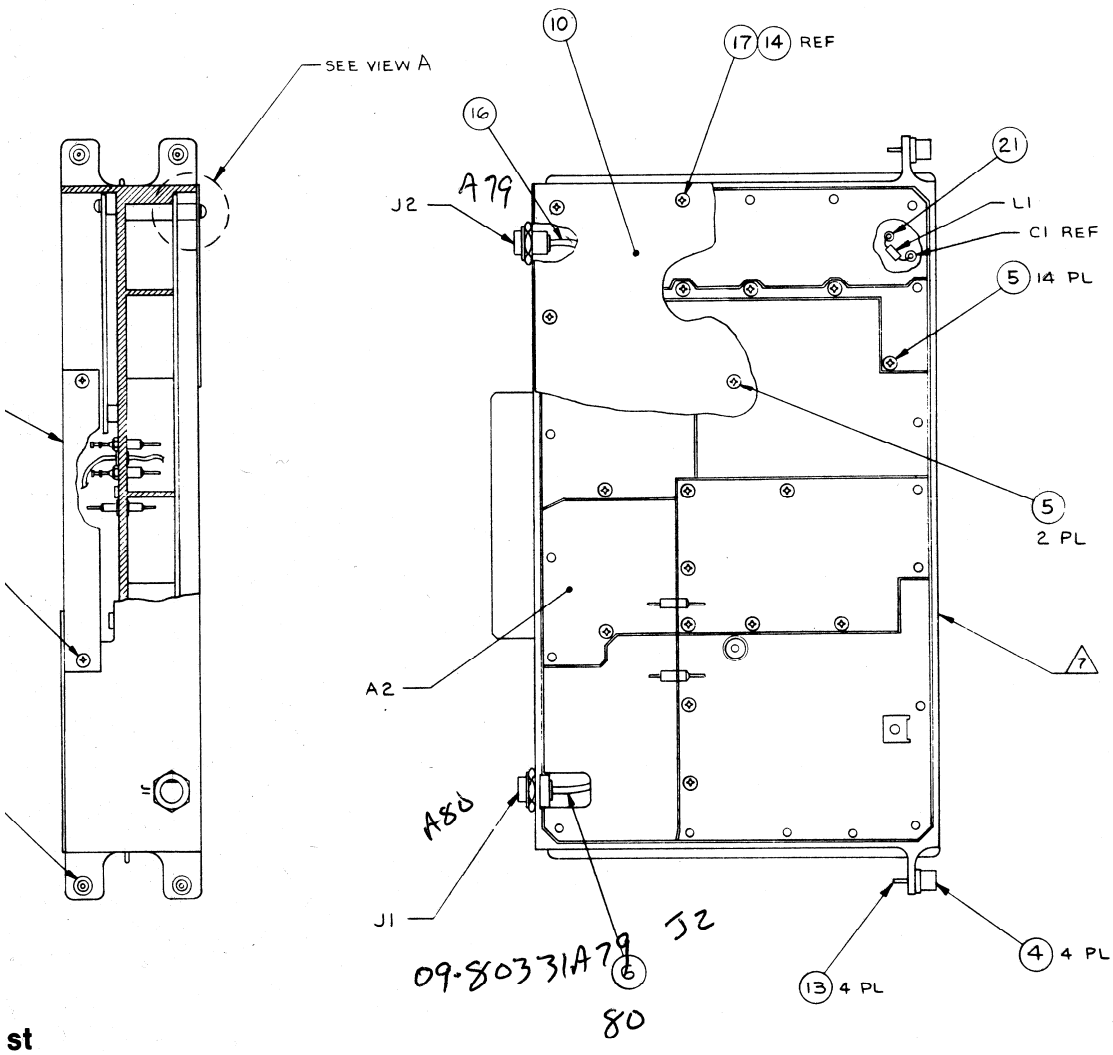

st

hesizer Kit PL-8482-O

E MOTOROLA PART NO.	DESCRIPTION
	capacitor, fixed pF: + 80-20%; 500:
21-82543H03	5000
21-82543H03	5000
	filter:
91-87679C01	1500 pF @ 25 °C
	coil, rf:
24-80369A37	choke; 100 uH
MECHANICAL PARTS	
15-80335A37	COVER, digital synthesizer
5-84500B03	EYELET, special; 4 used
42-84284B01	RETAINER; 4 used
3-138804	SCREW, machine; 4-40 × 5/16"; 28 used
15-80335A36	COVER, synthesizer RF
26-80370A67	SHIELD
64-80370A68	PLATE, connector
3-139581	SCREW, machine; 4-40 × 5/16"; 4 used
4-114583	LOCKWASHER, #4 split; 38 used
43-80370A69	SPACER, MF 4-40; 19 used
30-80377A09	CABLE, coaxial RG196A/U
3-136786	SCREW, machine; 4-40 × 1/4"; 19 used
3-139012	SCREW, machine; 4-40 × 1/4"; 7 used
29-80377A75	TERMINAL

Crimp on = ~~Coaxial~~ coiat

parts list

RTC4009B RF Synthesizer Digital Board — PL-8502-O

REFERENCE SYMBOL	MOTOROLA PART NO.	DESCRIPTION
		capacitor, pF ± 10%; 100 V: unless otherwise stated
C101	23-80369A65	30 uF + 75-10%; 16 V
C102 thru 105	21-82187B14	1000
C106	21-84494B46	180 ± 3%; 500 V
C107	21-82372C10	.05 uF ± 20; 25 V
C108	23-84665F01	10 uF; 25 V
C109	21-82428B59	.01 uF + 80-20%; 200 V
C110	23-80369A61	10 uF ± 20%; 35 V
C111	23-82397D50	0.22 uF ± 20%; 35 V
C112 thru 114	21-82428B59	.01 uF + 80-10%; 200 V
C115, 116	21-84494B37	11 ± 5%; 500 V
C117, 118	21-84494B24	39 ± 5%; 500 V
C119, 120	21-82428B10	3300
C121	21-82428B59	.01 uF + 80-20%; 200 V
C122	21-80369A82	0.1 uF ± 20%
C123	21-82187B07	470 ± 10%; 500 V
C124	21-80369A82	0.1 uF ± 20%
C125, 126	21-82187B14	1000
C127	23-82397D04	15 pF ± 20%; 15 V
C128	21-80370A02	2200
C129	23-80369A61	10 uF ± 20%; 35 V
C130	21-82428B59	.01 uF + 80-10%; 200 V
C131	21-80369A99	.01 uF
C132	21-82187B14	1000
C133	23-84665F01	10 uF; 25 V
C134 thru 137	21-82187B14	1000
C138	23-84665F01	10 uF; 25 V
C139	21-82187B14	1000
C140	23-84665F01	10 uF; 25 V
C141	21-82187B14	1000
C142	23-80369A61	10 uF ± 20%; 35 V
C143	21-82187B04	270; 500 V
C144	21-80376A12	33 ± 5%; 50 V (chip)
C151	23-84665F04	1.0 uF ± 20%; 50 V
C152	23-84665F10	100 uF; 25 V
C158	23-84665F01	10 uF; 25 V
C161	23-84665F01	10 uF; 25 V
C162 thru 168	21-82187B14	1000
C169, 170	23-84665F10	100 uF; 25 V
C171	23-84665F01	10 uF; 25 V
C172	21-80369A99	.01 uF
C173	21-82187B14	.001 uF
		diode:
CR101	48-84616A01	hot carrier
CR102, 103, 104	48-83617C01	silicon
CR105	48-86850C47	silicon
CR106	48-82617C01	silicon
		coil:
L101, 102	24-83977B02	
L103	24-80370A39	inductor, 12 mH
		transistor:
Q101	48-84308A92	NPN
Q102	48-869570	NPN; type M9570
Q103	48-869571	PNP; type M9571
Q104	48-869570	NPN; type M9570
Q105	48-84308A92	NPN
Q106	48-86851C32	NPN
Q107	48-869570	NPN; type M9570
Q108	48-2089C01	NPN
		resistor: ± 5%; 1/4 W: unless otherwise stated
R101	6-124A73	R10k
R102	6-124A49	1k
R103 thru 106	6-124A73	10k
R107	6-124B16	560k
R108	6-124A49	1k
R109	6-124A53	1.5k
R110	6-124A90	51k
R111, 112, 113	6-124A56	2.0k
R114	6-125A45	680; 1/2 W
R115	6-124A56	2.0k
R116	6-124A41	470
R117	6-124A56	2.0k
R118, 119, 120	6-124A41	470
R121	6-124B19	750k
R122	18-83452F19	variable, 100k
R124, 125, 126	6-124A49	1k
R127, 128	6-124A41	470
R129, 130	6-124A53	1.5k
R131	6-124A73	10k
R132, 133	6-124A53	1.5k
R134	6-124A39	390
R135	6-124A56	2.0k
R136	6-124A59	2.7k
R137	6-124A25	100
R138	6-124A61	3.3k
R139	6-124A71	8.2k
R140	6-124A39	390
R141	6-124A49	1k
R142	6-185A18	51; 1/8 W
R143	6-124A49	1k
R144, 145	6-124A41	470
R146	6-124A51	1.2k
R147	6-124A07	18
R148	6-124A53	1.5k
R149	6-124A35	270
R150, 151	6-124A41	470
R152	6-124A57	2.2k
R153	6-124A23	82
R154, 155	6-124A77	15k
R156	6-124A69	6.8k
R157, 158, 159	6-124A49	1k
R160	6-124A73	10k
R161	6-124A49	1k
R162	6-124A41	470
R163	6-124A73	10k
R164	6-124A65	4.7k
R165	6-124A41	470
R166	6-124A56	2.0k
R167, 168	6-124A41	470
R169	6-125A13	33; 1/2 W
R170	6-124A47	820
R171	6-125A43	560; 1/2 W
R172	6-124A63	3.9k
R173	6-124A73	10k
R174	6-124A27	120
R175	6-185A49	1000; 1/8 W
		integrated circuit:
U101	51-80365A01	phase frequency detector
U102	51-80365A03	quad exclusive OR gate
U103	51-82884L48	quad bilateral switch
U104	51-80365A07	op amp
U105	51-84561L53	modulus prescaler
U106	51-84561L55	dual D flip-flop
U107	51-83629M07	op amp
U108	51-82884L48	quad bilateral switch
U109	51-83629H07	op amp
U110	51-80365A05	op amp
U111	51-82609M54	4-bit binary synch up/down counter
U112	51-82884L15	quad clocked "D" latch
U113	51-80365A05	counter control logic unit
U114	51-84561L45	dual 4-input AND gate
U115	51-82884L48	quad bilateral switch
U116	51-83629M07	op amp
U117, 118	51-80365A08	op amp
U119	51-84371K99	phase-frequency detector
U120, 121, 122	51-82609M54	4-bit binary synch up/down counter
U123	51-82884L15	quad clocked "D" latch
U124 thru 127	51-82609M54	4-bit binary synch up/down counter
U128	51-83629M26	voltage regulator
U129	51-82609M02	dual JK flip-flop
U130	51-84561L03	hex inverter
U131	51-82609M02	dual JK flip-flop
U132, 133	51-82609M68	dual decade counter
U134	51-82884L12	dual 4-bit decade counter
U135	51-84561L03	hex inverter
U136	51-82884L32	4-bit latch/4-16 line decoder
U137 thru 145	51-82884L15	quad clocked "D" latch
U146	51-82884L04	quad 2-input NOR gate
		voltage regulator:
VR101	51-80365A17	3-terminal
VR102, 103	48-83193A59	Zener, 5.6 V ± 5%; 0.4 W
VR104	48-82256C50	Zener, 3.09 V ± 5%; 0.4 W

REF. NO.	MECHANICAL PARTS	
1	84-80335A22	PWB, digital synthesizer
2	SN63WRP3	SOLDER
3	11-14167A01	INK, BLACK
4	MS35206-214	SCREW, Phillips; 4-40 × 0.312"
5	4-7007	WASHER, flat; No. 4
6	4-114583	WASHER, lock; No. 4
7	2-7019	NUT, hex; 4-40
9		WIRE, 24
10	M23053/5-206-C	INSULATION SLEEVING; 0.250 CLR

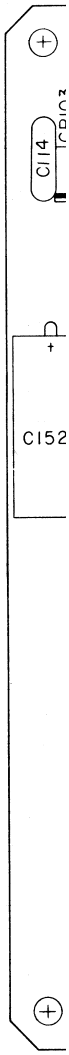

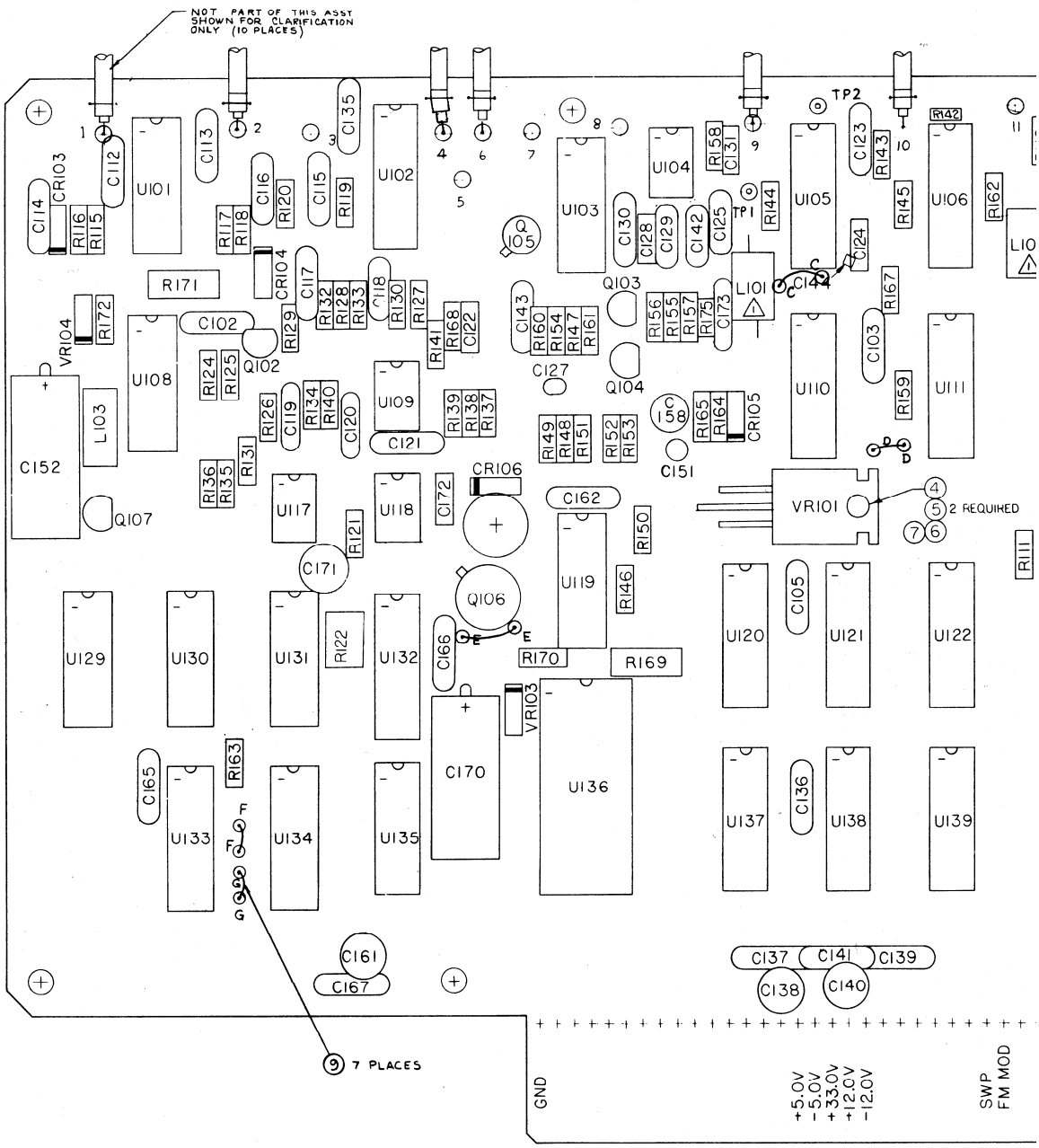

ounter

ounter

ounter

2"

50 CLR

RF SYNTHESIZER (A05)

DIGITAL BOARD

MODEL RTC4009B
SCHEMATIC DIAGRAM, CIRCUIT BOARD
DETAIL, AND PARTS LIST

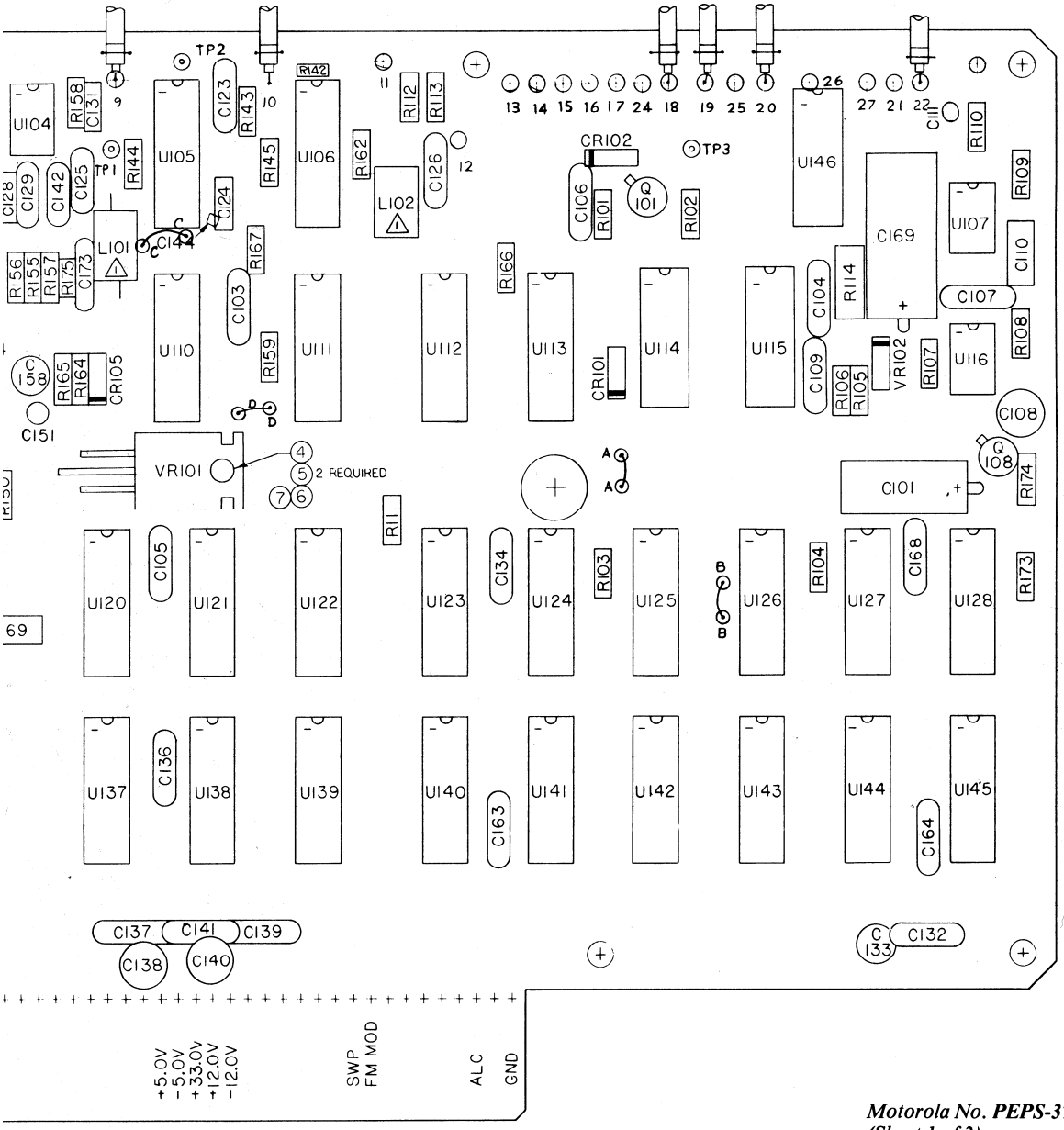

RF SYNTHESIZER DIGITAL BOARD

Motorola No. PEPS-37064-O
(Sheet 1 of 3)
8/12/83-PHI

RF SYNTHESIZER (A05)

DIGITAL BOARD

MODEL RTC4009B
SCHEMATIC DIAGRAM, CIRCUIT BOARD
DETAIL, AND PARTS LIST

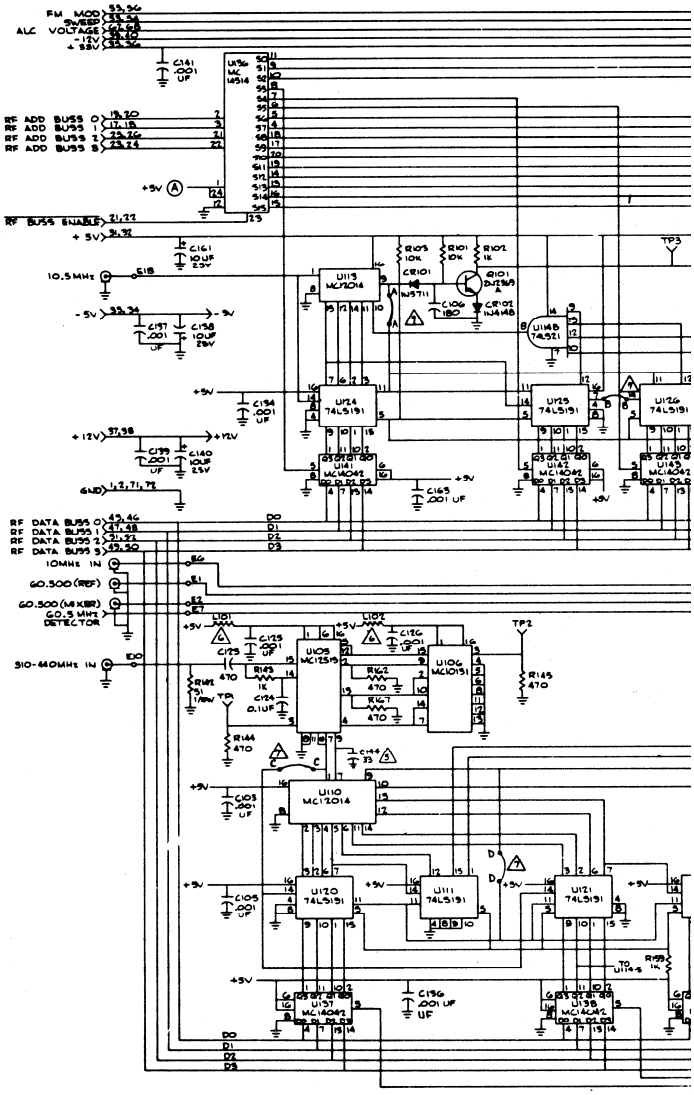

Motorola No. ***PEPS-37064-O***
(Sheet 2 of 3)
8/12/83-PHI

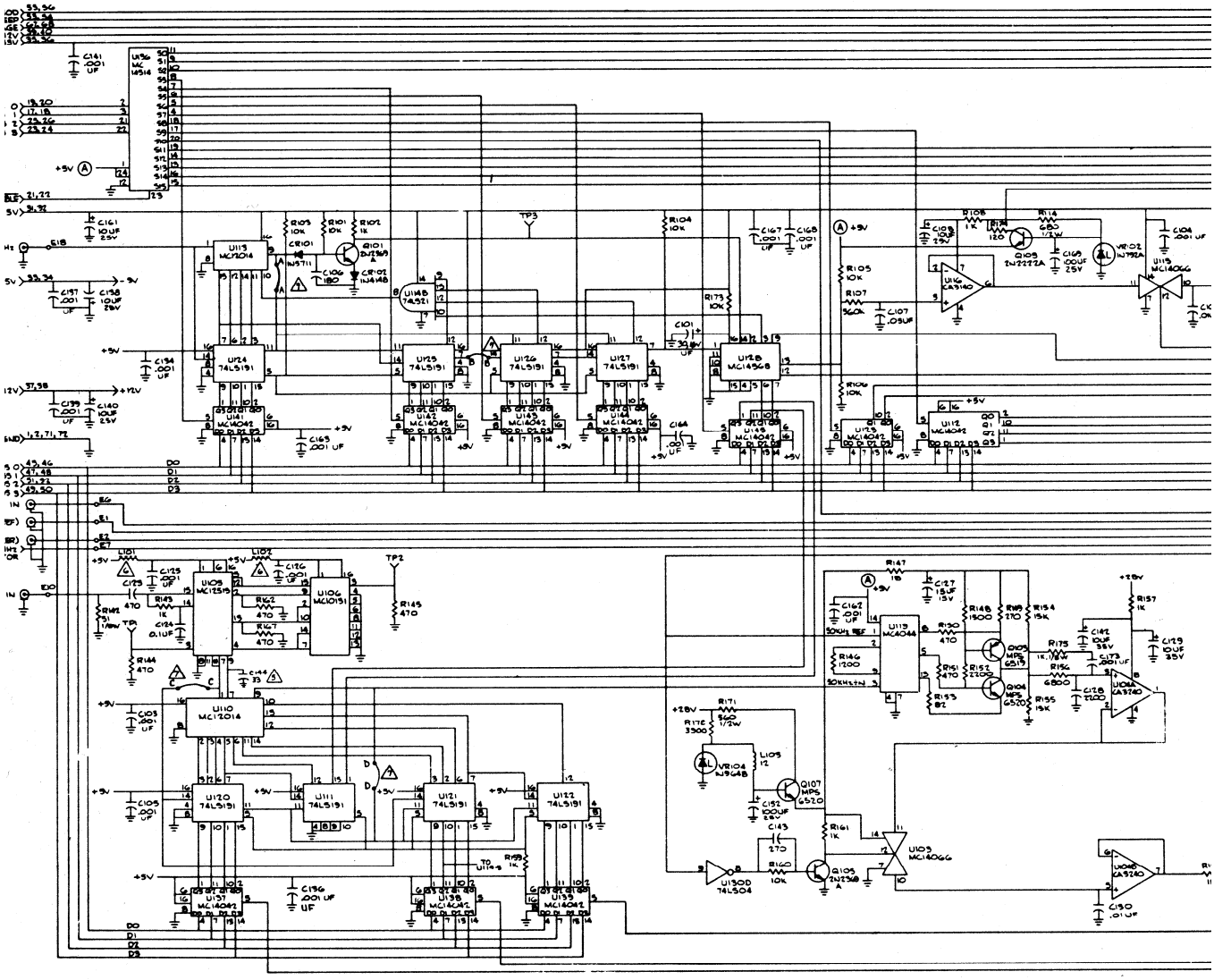
U113 MC12014
U124 74LS191
U125 74LS191
U126 74LS191
U127 74LS191
U128 MC14556B
U141 MC14042
U142 MC14042
U143 MC14042
U144 MC14042
U145 MC14042
U112 MC14042
U116 CA3140
U115 MC14066
U105 MC12519
U106 MC10151
U110 MC12014
U120 74LS191
U111 74LS191
U121 74LS191
U122 74LS191
U137 MC14042
U138 MC14042
U139 MC14042
U136 MC14514
U119 MC14044
U103 MC14066
U130D 74LS04
U130A CA3240
U130B CA3240
Q107 MPS 6520
Q105 2N2368
Q109 2N2222A
Q104 MPS 6520
Q105 MPS 6519
VR101 1N4148
VR102 1N752A
VR104 1N964B
+5V
+12V
+28V
TP2
TP3

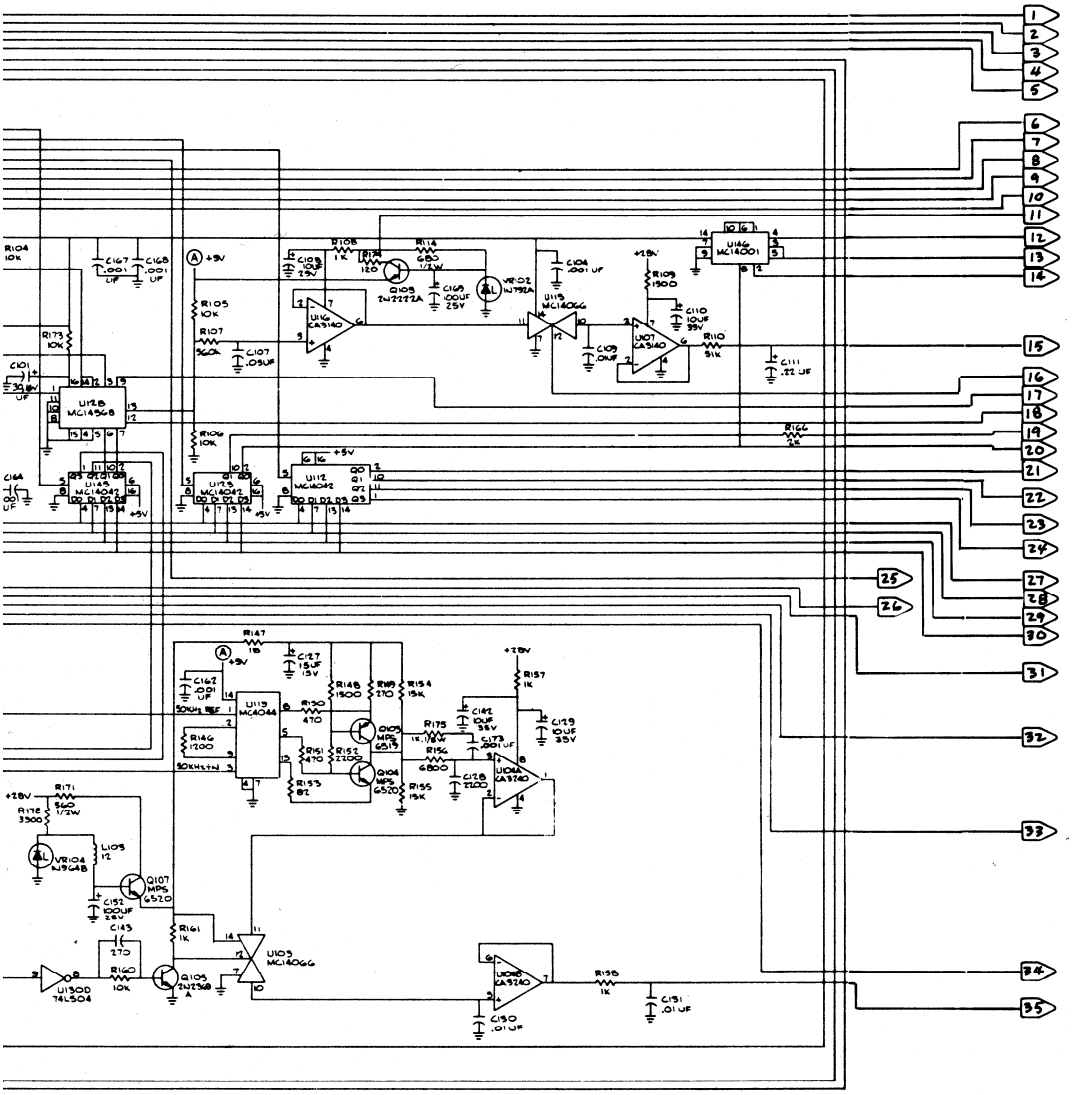
U128
MC14568
U145
MC14042
U173
MC14042
U112
MC14042
U116
CA3140
U107
CA3140
U119
MC14066
U146
MC14001
U113
MC4044
U104
CA3240
U105
MC14066
U130D
74LS04
U106
CA3240
+5V
+28V
+9V
1
2
3
4
5
6
7
8
9
10
11
12
13
14
15
16
17
18
19
20
21
22
23
24
25
26
27
28
29
30
31
32
33
34
35

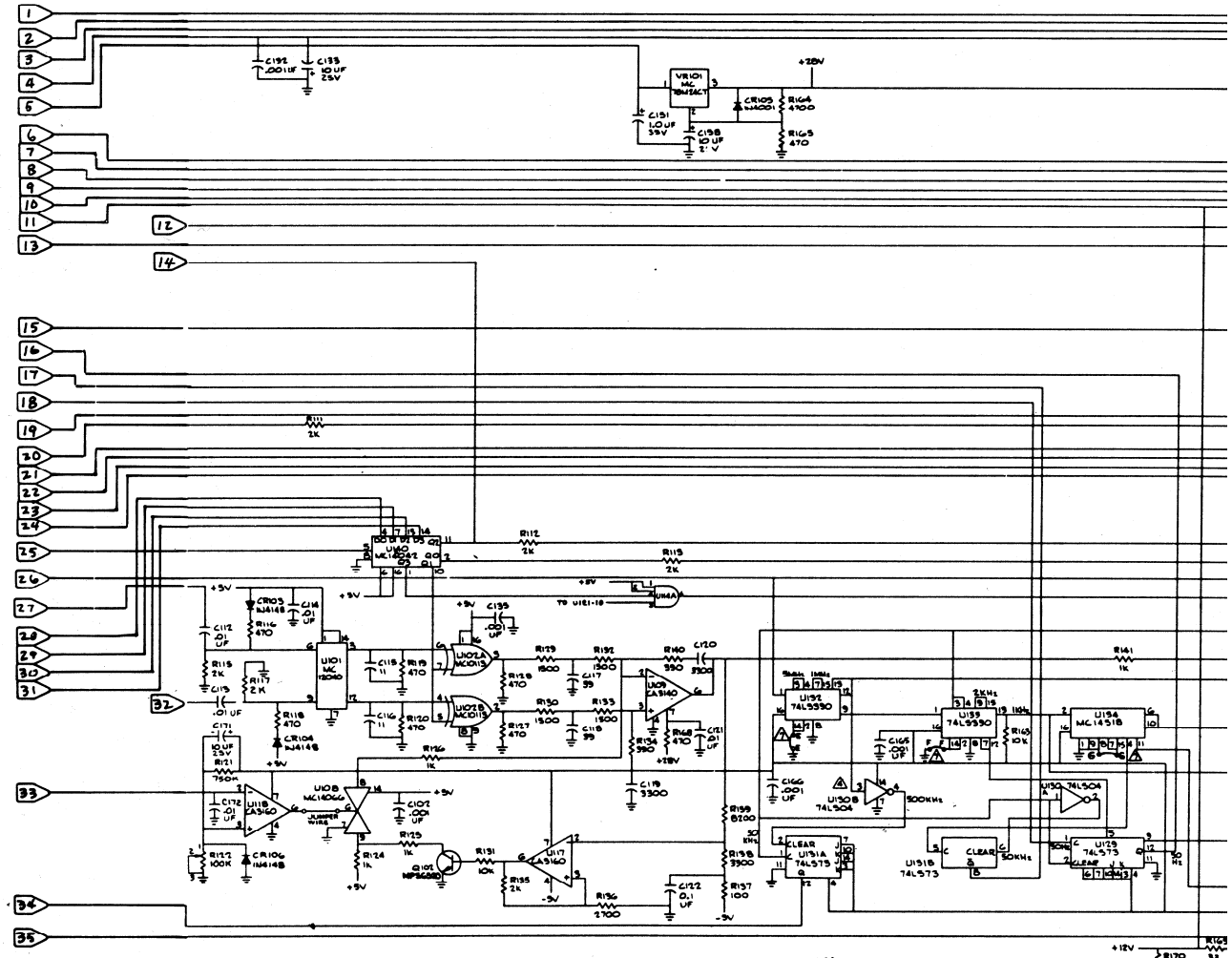

NOTES:

1. PARTIAL REFERENCE DESIGNATIONS ARE SHOWN FOR COMPLETE DESIGNATION PREFIX WITH 1A5.
2. FOR REFERENCE DRAWINGS REFER TO:
   01-P00358N PWB ASSY
   01-P00388N MODULE ASSY
3. UNLESS OTHERWISE SPECIFIED:
   ALL RESISTORS ARE IN OHMS ±5 PCT. 1/4 WATT.
   ALL CAPACITORS ARE IN PF.
   ALL INDUCTORS ARE IN MH.
   ALL VOLTAGES ARE DC.

△ EXTRA INPUTS ON 74LS04 (U130, U195) GROUNDED.

△ CHIP CAPACITOR

△ COIL, VK 200-10/3B

△ JUMPER WIRES. MAY BE REMOVED FOR TROUBLESHOOTING.

RF SYNTHESIZER (A05)

DIGITAL BOARD

MODEL RTC4009B
SCHEMATIC DIAGRAM, CIRCUIT BOARD
DETAIL, AND PARTS LIST

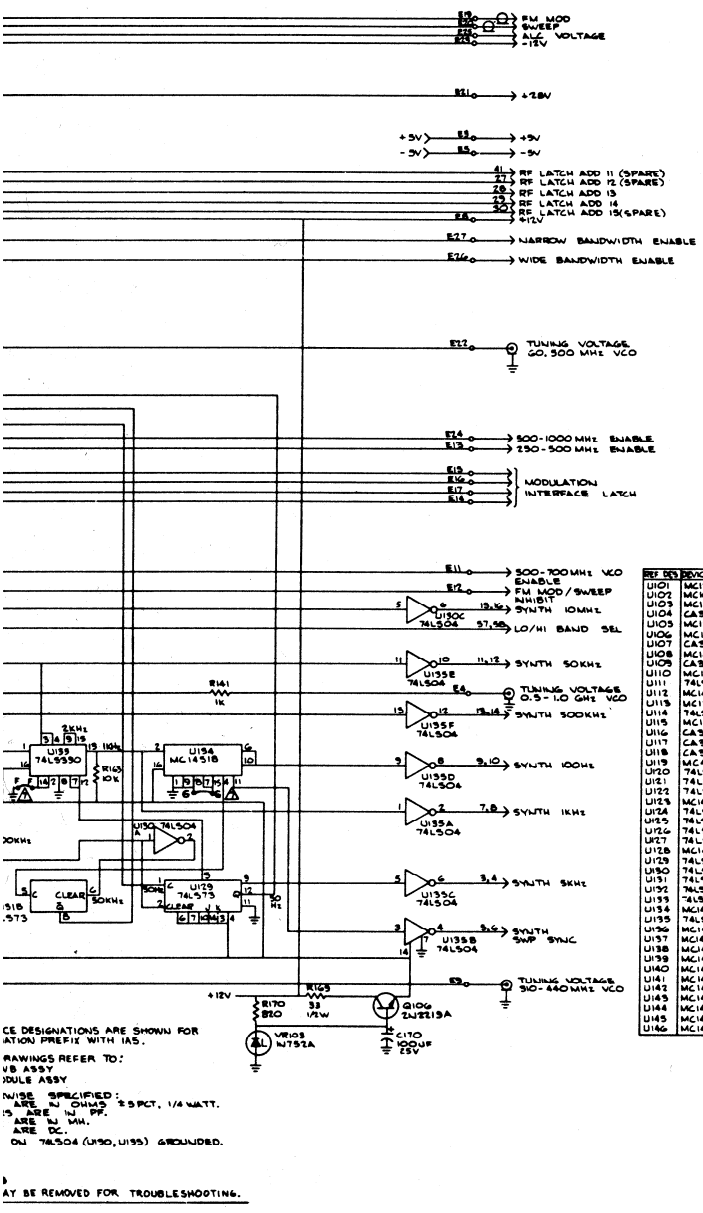

REF DES	DEVICE TYPE	GND	+5V	-5V	+12V	NO CONN
U101	MC12040L	7	1,14			2,4,8,10,11,13
U102	MC10118L	8,9	1,16			4,11,12,13,14,15
U103	MC14066	7				1,2,3,4,8,9,13
U104	CA3240	4				
U105	MC12518L	9				
U106	MC10131L	4,5,6,8,11,12,13				
U107	CA3140	4				1,5,8
U108	MC14066	7	14			1,2,3,4,5,8,9,12,13
U109	CA3140	4				1,5,8
U110	MC12014L	8	16			15
U111	74LS191N5	4,8,9,10	16			2,3,6,7,13
U112	MC14042	8	6,16			3,9,12,15
U113	MC12014L	8	16			15,1,2,3,5,6,7
U114	74LS21N5	7	14,1,2			3,11
U115	MC14066	7	14			1,2,3,4,5,8,9,13
U116	CA3140	4				1,5,8
U117	CA3160			4		1,5,8
U118	CA3160	4				1,5,8
U119	MC4044	4,7	14			2,10,11,12
U120	74LS191N5	4,8	16			12,13
U121	74LS191N5	4,8	16			12,13
U122	74LS191N5	4,8	16			2,3,6,7,13
U123	MC14042	8	6,16			1,2,3,9,11,12,15
U124	74LS191N5	4,8	16			12,13
U125	74LS191N5	4,8	16			2,3,6,13
U126	74LS191N5	4,8	16			2,3,6,13
U127	74LS191N5	4,8	16			2,3,6,13
U128	MC14568	4,9,8,10,11,15	16			
U129	74LS73N5	11				8,13
U130	74LS04N5	7,10,11,12,13				
U131	74LS73N5	11				8,13
U132	74LS390N5	2,8,14				3,6,10,11
U133	74LS390N5	2,8,14				3,6,10,11
U134	MC14518	1,7,8,9,15				3,5,12,13,14
U135	74LS04N5	7				
U136	MC14514	12	1,24			
U137	MC14042	8	6,16			3,9,12,15
U138	MC14042	8	6,16			3,9,12,15
U139	MC14042	8	6,16			3,9,12,15
U140	MC14042	8	6,16			3,9,12,15
U141	MC14042	8	6,16			3,9,12,15
U142	MC14042	8	6,16			3,9,12,15
U143	MC14042	8	6,16			3,9,12,15
U144	MC14042	8	6,16			3,9,12,15
U145	MC14042	8	6,16			3,9,12,15
U146	MC14001	7,9	14			11,12,13

CE DESIGNATIONS ARE SHOWN FOR
ATION PREFIX WITH IAS.

RAWINGS REFER TO:
UB ASSY
DULE ASSY

WISE SPECIFIED:
ARE IN OHMS ±5 PCT. 1/4 WATT.
S ARE IN PF.
ARE IN MH.
ARE DC.
ON 74LS04 (U130, U135) GROUNDED.

AY BE REMOVED FOR TROUBLESHOOTING.

RF SYNTHESIZER DIGITAL BOARD

Motorola No. PEPS-37064-O
(Sheet 3 of 3)
8/12/83-PHI

RF SYNTHESIZER (A05)

RF BOARD

MODEL RTC4010B
SCHEMATIC DIAGRAM, CIRCUIT BOARD
DETAIL, AND PARTS LIST

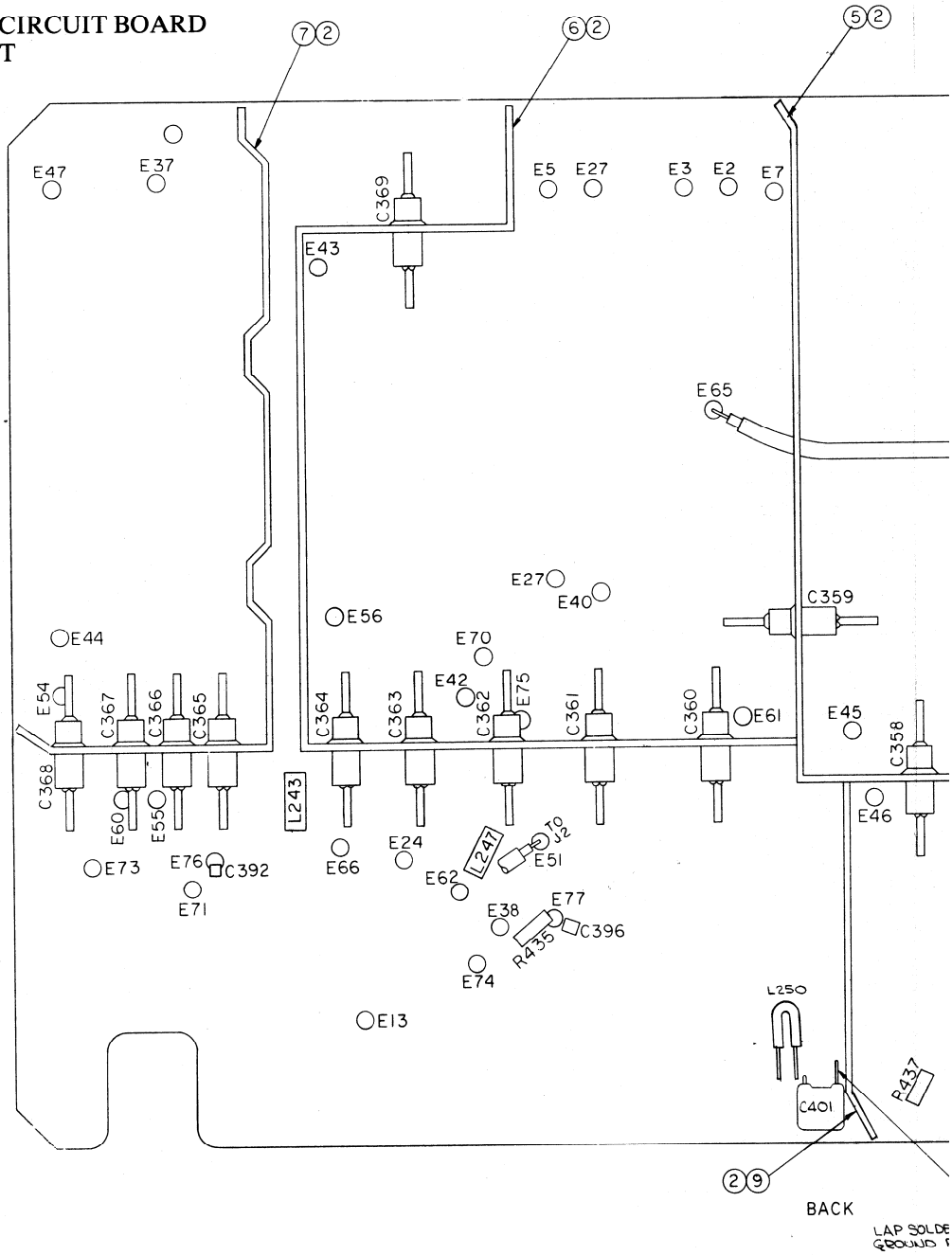

Motorola No. PEPS-37065-O
(Sheet 1 of 6)
8/12/83-PHI

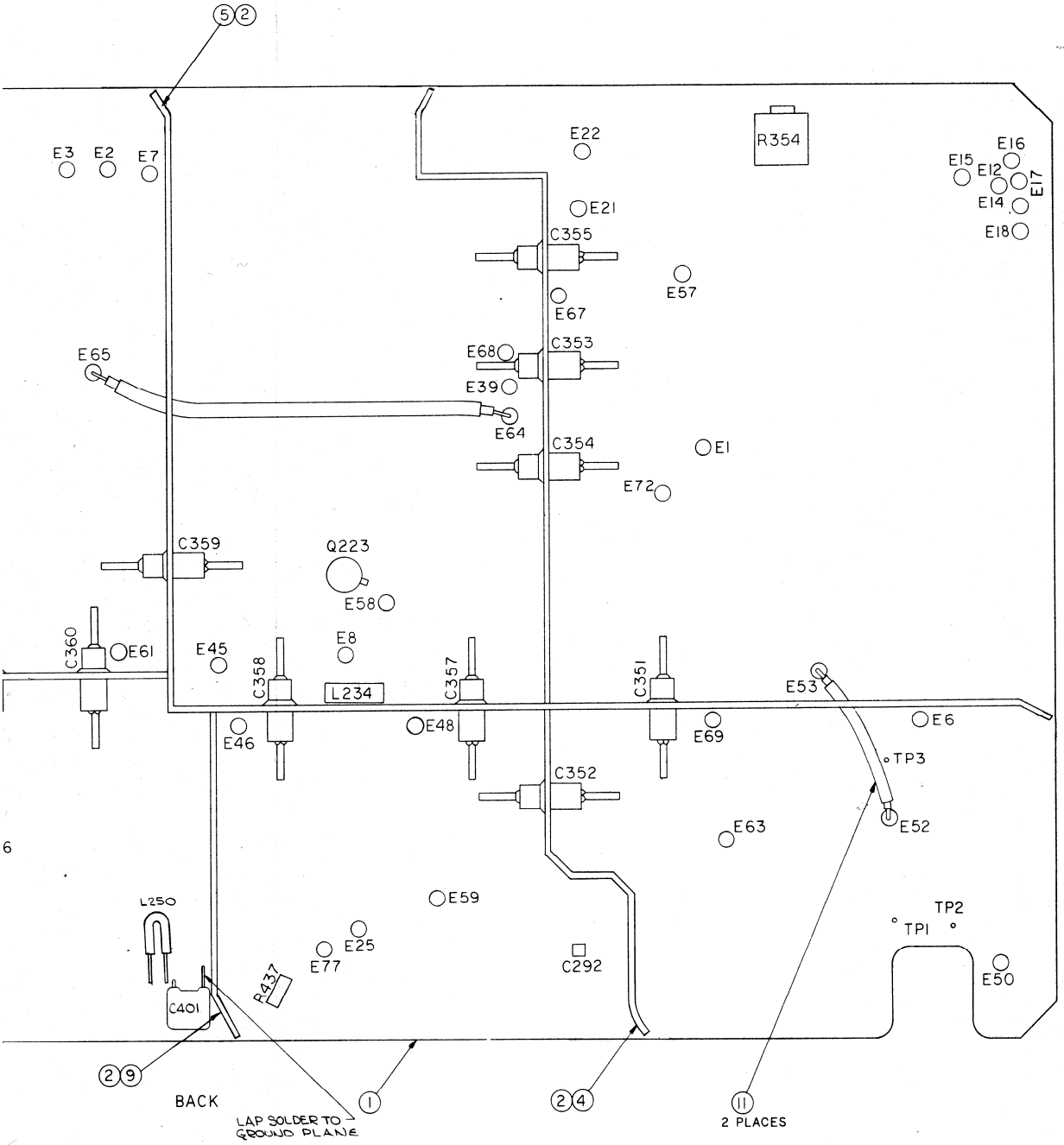
5 2
E3
E2
E7
E22
R354
E16
E15
E12
E17
E14
E18
E21
C355
E57
E67
E65
E68
C353
E39
E64
C354
E1
E72
C359
Q223
E58
C360
E61
E45
E8
C358
L234
C357
C351
E53
E46
E48
E69
E6
TP3
C352
E52
E63
6
L250
E59
TP2
TP1
E25
E77
C292
E50
R437
C401
2 9
BACK
1
LAP SOLDER TO GROUND PLANE
2 4
11
2 PLACES

NOTES:

1. VALUE OF COMPONENT TO BE SELECTED IN TEST.

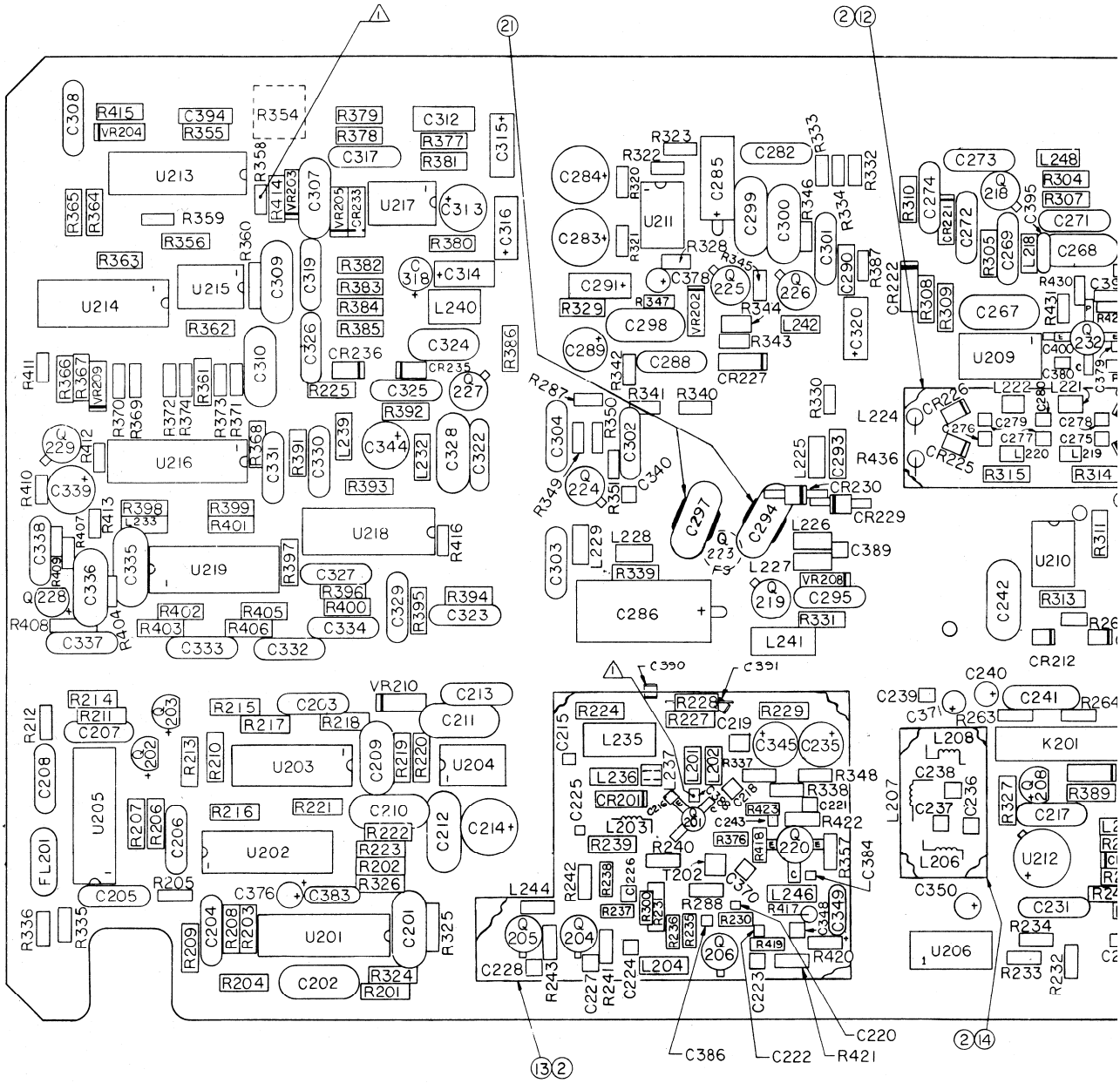

SC

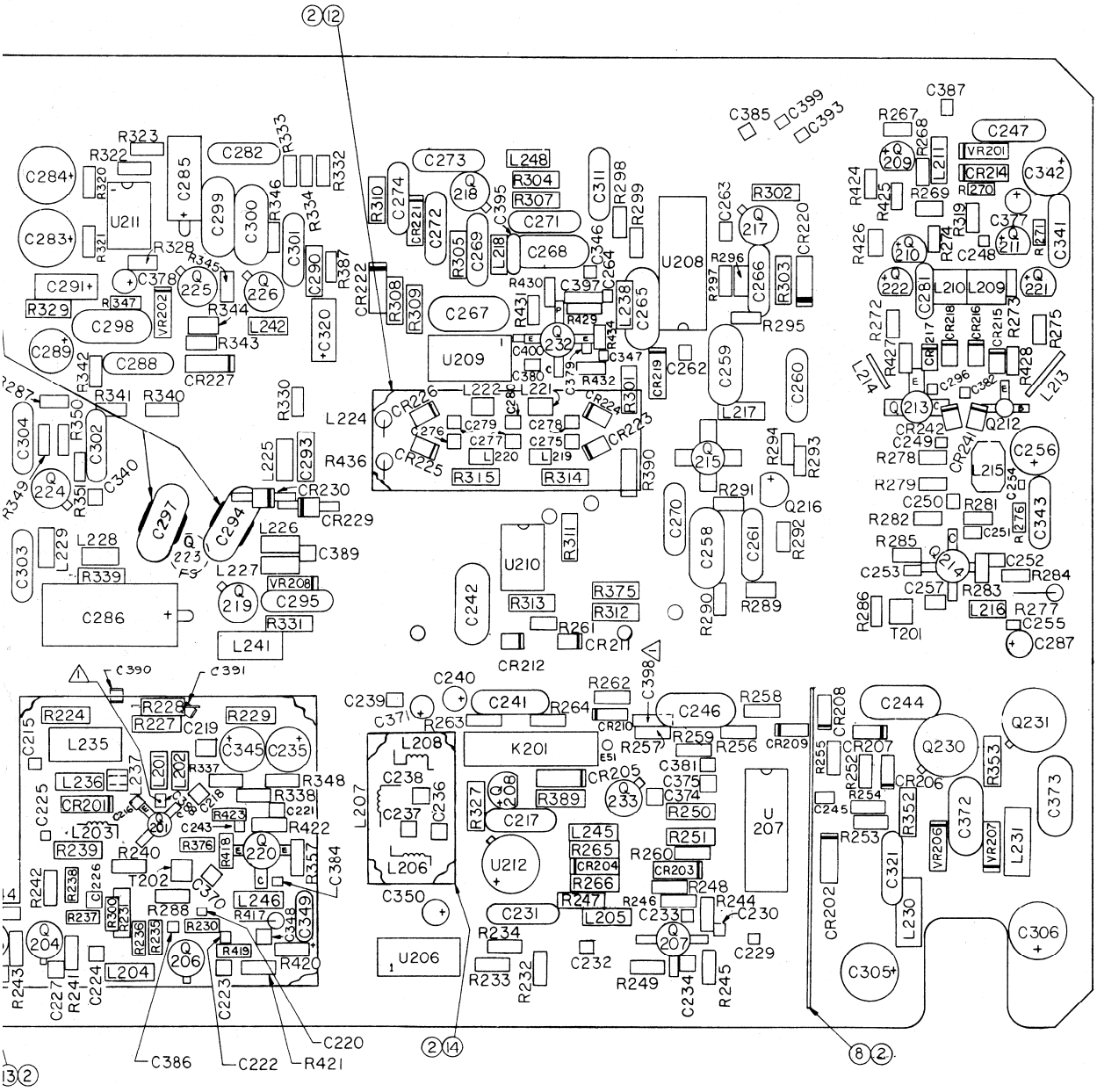

2 12
2 14
8 2
13 2
C284
C283
R323
R322
R320
R321
U211
C285
C282
R333
R332
R334
R346
C299
C300
C301
C290
R387
R328
C378
R345
Q225
Q226
C291
R347
R329
VR202
R344
R343
C298
L242
C320
C289
R342
C288
CR227
R287
R341
R340
R330
C304
R350
C302
R349
Q224
R351
C340
C303
L229
L228
R339
C297
C294
Q223
L225
C293
CR230
CR229
R436
L226
C389
L227
VR208
Q219
C295
R331
C286
L241
R310
C274
CR221
C272
CR222
R308
R309
R305
C269
L218
C273
L248
R304
R307
Q218
C395
C271
C268
C311
R298
R299
C346
C264
R430
C397
R429
R431
C267
U209
C400
C380
Q232
R434
C347
C379
R432
L238
C265
R301
L222
L221
C280
L224
CR226
C276
C279
C277
L220
C278
C275
L219
CR224
CR223
CR225
R315
R314
R390
U208
C263
R302
Q217
C220
R296
R297
C266
R303
R295
CR219
C262
C259
C260
L217
Q215
R294
R293
R291
Q216
C270
C258
C261
R292
R290
R289
U210
R311
R313
R375
R312
C242
R261
CR211
CR212
C398
C385
C399
C393
C387
R267
R268
C247
Q209
L211
VR201
CR214
C342
R424
R425
R269
R270
R319
C377
Q211
R271
C341
R426
Q210
R274
C248
Q222
C281
L210
L209
Q221
R272
R427
L214
CR217
CR218
CR216
CR215
R273
R275
R428
L213
C296
C382
Q213
CR242
Q212
C249
CR241
R278
C256
L215
R279
C250
R281
C254
R282
R276
C251
C343
R285
C252
C253
Q214
R284
C257
R283
R286
T201
L216
R277
C255
C287
C390
C391
C215
R224
R228
R227
C219
R229
L235
C345
C235
L236
C237
L201
L202
R337
C218
R348
R338
CR201
C216
C221
C225
L203
Q201
C243
R423
R422
R239
R240
R376
R418
Q220
C384
R357
T202
C370
R242
R238
C226
L246
R237
R300
R231
R288
R417
C348
C349
Q204
R236
R235
R230
Q206
R419
R420
R243
C227
R241
C224
L204
C223
C220
C386
C222
R421
C239
C240
C371
C241
R263
R264
R262
CR210
C246
R258
L208
C238
C236
L207
C237
L206
K201
E51
R257
R259
R256
CR209
CR205
C381
C375
C374
R327
Q208
R389
Q233
C217
R250
U212
L245
R265
CR204
R266
R251
R260
CR203
U207
C350
R247
R246
R248
R244
C233
C230
C231
L205
R234
Q207
U206
R233
R232
C232
C229
R249
C234
R245
CR208
C244
Q230
Q231
R255
CR207
R252
CR206
R353
R254
C245
R352
C372
R253
VR206
VR207
L231
C373
C321
CR202
L230
C305
C306

RF SYNTHESIZER (A05)

RF BOARD

MODEL RTC4010B
SCHEMATIC DIAGRAM, CIRCUIT BOARD
DETAIL, AND PARTS LIST

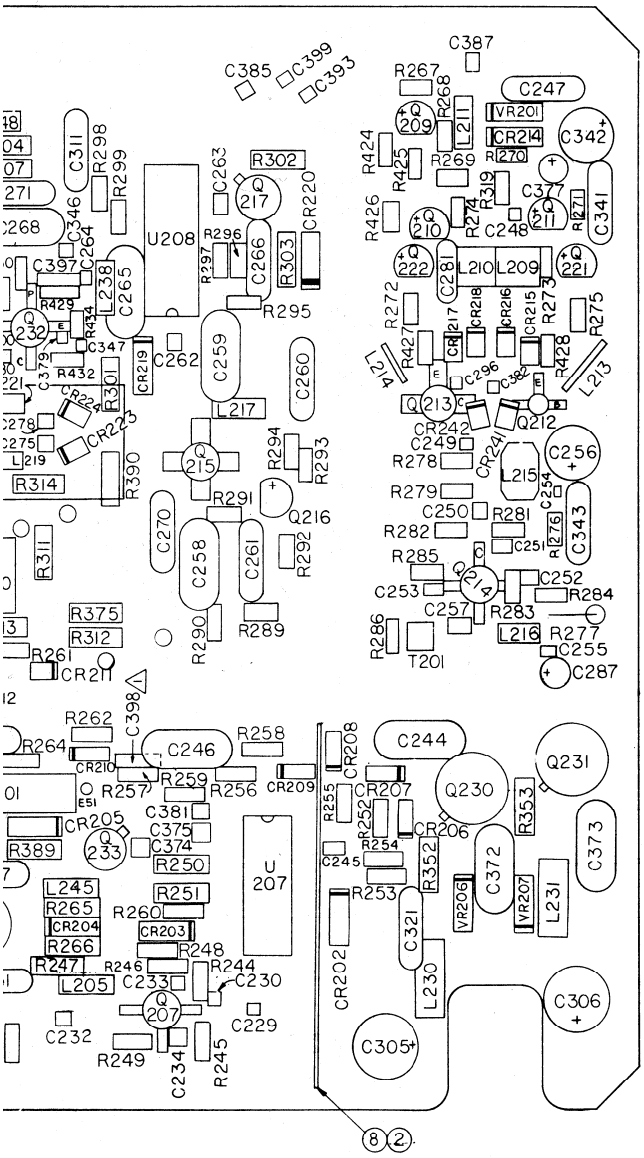

RF SYNTHESIZER RF BOARD

*Motorola No. **PEPS-37065-O***
(Sheet 2 of 6)
8/12/83- PHI

RF SYNTHESIZER (A05)

RF BOARD

MODEL RTC4010B
SCHEMATIC DIAGRAM, CIRCUIT BOARD DETAIL, AND PARTS LIST

Motorola No. ***PEPS-37065-O***
(Sheet 3 of 6)
8/12/83-PHI

parts list

RTC4010B RF Synthesizer RF Board — PL-8520-O

REFERENCE SYMBOL	MOTOROLA PART NO.	DESCRIPTION
		capacitor: pF ± 10%; 100 V: unless otherwise stated
C201, 202	21-82187B14	1000
C203 thru 208	21-82428B59	.01 uF + 80-10%; 200 V
C209, 210	21-82187B08	220; 500 V
C211, 212	21-84494B04	100 ± 5%; 500 V
C213	21-82428B59	.01 uF + 80-10%; 200 V
C214	23-84665F01	10 uF; 25 V
C215	21-80376A17	100; 50 V (chip)
C216	21-80376A10	22 ± 5%; 50 V (chip)
C217	21-82187B14	1000; 100 V
C218	21-80376A10	22 ± 50%; 50 V (chip)
C219	21-80376A26	2200; 50 V (chip)
C220	21-80376A17	100; 50 V (chip)
C221	21-80376A10	22 ± 5%; 50 V (chip)
C222	21-80376A25	1000; 50 V (chip)
C223	21-80376A17	100; 50 V (chip)
C224, 225	21-80376A25	1000; 50 V (chip)
C226	21-80376A17	100; 50 V (chip)
C227, 228, 229	21-80376A10	22; 50 V (chip)
C230	21-80376A26	2200; 50 V (chip)
C231	21-82187B14	1000; 100 V
C232	21-80376A10	22 ± 5%; 50 V (chip)
C233, 234	21-80376A08	15 ± 5%; 50 V (chip)
C235	23-84665F01	10; 50 V (chip)
C236	21-80376A06	10 ± 5%; 50 V (chip)
C237, 238	21-80376A10	22 ± 5%; 50 V (chip)
C239	21-80376A06	10; 50 V (chip)
C240	23-83441B15	1.0 uF ± 20%; 35 V
C241	21-82428B59	.01 uF + 80-20%; 200 V
C242	21-84494B04	100 ± 5%; 500 V
C243	21-80376A26	2200; 50 V (chip)
C244	21-84494B01	51 ± 5%; 500 V
C245	21-80376A10	22 ± 5%; 50 V (chip)
C246	21-84494B01	51 ± 5%; 500 V
C247	21-82428B59	.01 uF + 80-20%; 200 V
C248	21-80376A11	27 ± 5%; 50 V (chip)
C249, 250	21-80376A10	22 ± 5%; 50 V (chip)
C251	21-80376A26	2200; 50 V (chip)
C252, 253	21-80376A08	15 ± 5%; 50 V (chip)
C254, 255	21-80376A26	2200; 50 V (chip)
C256	23-84665F01	10 uF; 25 V
C257	21-80376A17	100; 50 V (chip)
C258, 259	21-84494B24	39 ± 5%; 500 V
C260, 261	21-82428B59	.01 uF + 80-20%; 200 V
C262, 263	21-80376A25	1000; 50 V (chip)
C264	21-80376A17	100; 50 V (chip)
C265	21-84494B04	100 ± 5%; 500 V
C266	21-82428B59	.01 uF + 80-20%; 200 V
C267	21-84494B34	68 ± 5%; 500 V
C268	21-859936	15 ± 5%; 500 V
C269, 270	21-82428B59	.01 uF + 80-20%; 200 V
C271	21-84494B06	120 ± 5%; 500 V
C272, 273	21-82428B59	.01 uF + 80-20%; 200 V
C274	21-865922	390; 500 V
C275, 276	21-80376A03	3.9 ± 0.25%; 50 V (chip)
C277	21-80376A07	12 ± 5%; 50 V (chip)
C278, 279	21-80376A05	5.6 ± 0.25%; 50 V (chip)
C280	21-80376A09	18 ± 5%; 50 V (chip)
C281	23-82397D04	15 uF ± 20%; 15 V
C282	21-80369A99	.01 uF
C283, 284	23-84665F02	15 uF; 25 V
C285	23-80369A64	6.8 uF; 35 V
C286	23-84665F10	100 uF; 25 V
C287	23-83441B18	4.7 uF ± 20%; 20 V
C288	21-82428B59	.01 uF + 80-20%; 200 V
C289	23-84665F01	10 uF; 25 V
C290	21-80370A03	6800
C291	23-80368A62	15 uF ± 20%; 35 V
C292	21-80376A17	100 ± 20%; 50 V (chip)
C293	21-80370A04	.011 uF
C294	21-859934	10 ± 5%; 500 V
C295	21-82428B10	3300
C296	21-80376A01	1.5 ± 0.5 pF; 50 V (chip)
C297	21-859936	15 ± 5%; 500 V
C298	21-84494B47	6 ± 0.5 pF; 500 V
C299, 300	21-84494B74	6 ± 0.5 pF; 500 V
C301 thru 304	21-82187B14	1000
C305, 306	23-84665F02	15 uF; 25 V
C307, 308	21-82372C10	.05 uF ± 20%; 25 V
C309	21-84494B45	56 ± 5%; 500 V
C310	21-84494B38	15 ± 5%; 500 V
C311	21-82187B14	1000
C312	23-82397D50	0.22 uF ± 20%; 35 V
C313	23-84665F01	10 uF; 25 V
C314, 315, 316	23-80369A61	10 uF ± 20%; 35 V
C317	22-82428B59	.01 uF + 80-20%; 200 V
C318	23-83441B15	1.0 uF ± 20%; 35 V
C319	21-82428B59	.01 uF + 80-20%; 200 V
C320	23-80369A62	15 uF ± 20%; 35 V
C321	21-82187B14	1000
C322, 323	21-82428B59	.01 uF + 80-20%; 200 V
C324	21-80369A88	22 ± 5%; 500 V
C325, 326	21-82187B08	220; 500 V
C327	21-82187B14	1000
C328	21-80369A83	2 ± 0.5 pF; 500 V

REFEREN(SYMBOL
C329
C330
C331 thru 33
C335
C336
C337, 338
C339
C340
C341
C342
C343
C344, 345
C346, 347
C348
C349
C350
C351 thru 36
C370
C371
C372, 373
C374, 375
C376, 377
C378
C379
C380
C381
C382
C383
C384
C385, 386
C387
C388
C389
C390 thru 39
C394, 395
C396
C397
C398
C399, 400
C401
C500
C501
CR201
CR202 thru 2
CR206 thru 2
CR214
CR215, 216
CR217, 218
CR219, 220
CR221, 222
CR223 thru 2
CR227
CR229, 230
CR233
CR235, 126
CR241, 242
FL201
K201
L201, 202
L203
L204, 205
L206, 207, 20
L209, 210
L211
L213, 214
L215
L216, 217
L218
L219, 220
L221, 222
L224
L225
L226, 227
L228
L229
L230, 231
L232
L233
L234, 235
L236
L237
L238
L239
L240
L241
L242