goes low at the first low-to-high transition of the PL tone. COUNT ENABLE is low and U8 counts the 10 MHz input. On the next low-to-high transition of the tone, COUNT ENABLE goes high, the counter interrupt is latched, and U5 toggles causing U23B to reset and U3 to be preset.

2.3.4 If the subaudible tone frequency is below 16 Hz, U23-14 goes high before U3 completes its cycle. The abort pulse generated at U7-12 drives U3 to the preset state, clears U8, and forces a counter interrupt. U23B acts as a timer to ensure that the control logic does not get hung up when PL input is absent.

2.4 ANALOG-TO-DIGITAL CONVERTER

2.4.1 The analog-to-digital (A/D) converter, U9, changes the input voltage on the AD INPUT line into a 10-bit data word. The A/D converter accepts input voltages in the range of 0-999 mV full scale. A separate sign bit from the AIB is read by the microprocessor through U11 to indicate input polarity.

2.4.2 The +2.49 V dc supplied by Zener diode VR1 is inverted by U12. The reference current developed through R20, R21, and R22 sets the full scale voltage of the A/D converter. The zero voltage offset of U9 is cancelled by adjusting R17.

2.4.3 An A/D conversion is initiated when U1 decodes the AD START command. When the conversion is completed, U9-23 goes high and clocks the A/D interrupt latch U13B. The interrupt informs the microprocessor that data is available. After the processor reads the A/D data, U13B is reset.

2.5 PEAK DETECTOR SWITCHING

The 1-of-4 select, U15, selects one of four signals for application to the peak detectors on the AIB. The signals are the MOD; REC AUD; CAR & MOD LEVEL OUT; and PCT AM.

2.6 SPEAKER AUDIO SWITCHING

U17A switches MOD or REC AUD to the speaker volume control. U17C serves as a speaker audio mute switch. The return from the wiper of the volume control is summed by U16B with the keyboard response tone from U25C and the alarm tone from U25B. The generate modulation and recovered audio are buffered separately by U16A and U18A which drive the front panel MOD and DEMOD OUT jacks.

2.7 AM AUDIO SWITCHING

U17B gates modulation audio plus a dc bias signal onto the AM MOD line when the unit is in AM generate mode. The dc bias reduces the rf output level to provide sufficient modulation headroom for AM.

COUNTER BOARD (A10)

MODEL RTL4106A
SCHEMATIC DIAGRAM, CIRCUIT BOARD DETAIL,
AND PARTS LIST

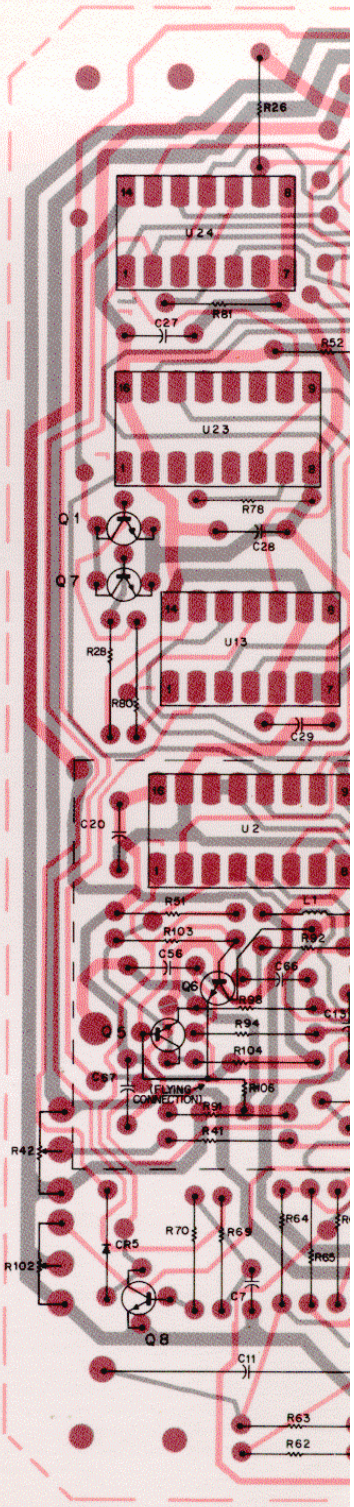

Motorola No. ***PEPS-36851-O***
(Sheet 1 of 2)
8/12/83-PHI

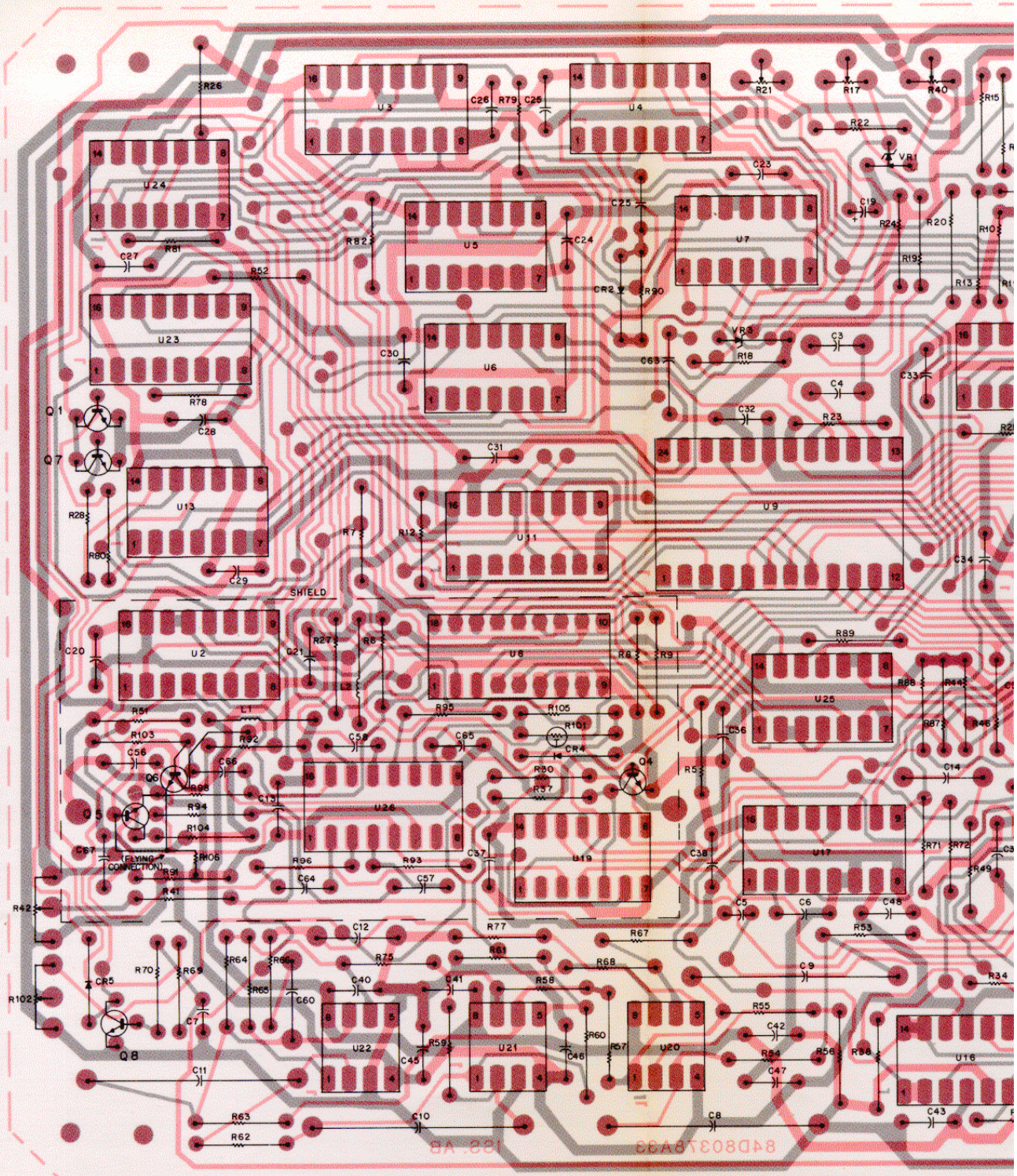

SHOWN FROM COMPONENT SIDE

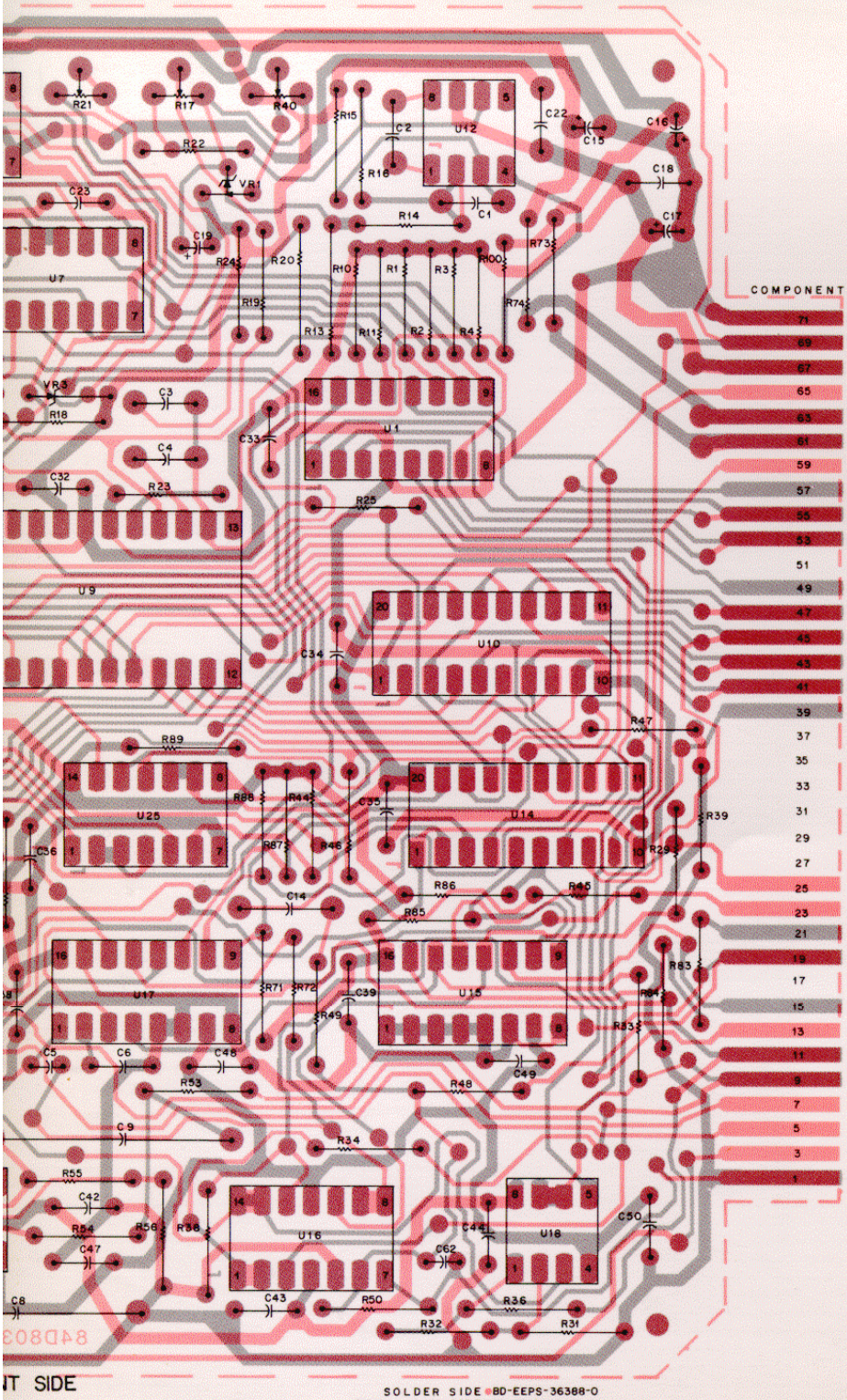

COMPONENT	SIDE	SOLDER SIDE
71	GND	(72) GND
69	10 MHZ	(70) $\overline{IRQ}$
67	+5V	(68) +5V
65		(66) AC/DC SEL
63	+12V	(64) +12V
61	−12V	(62) −12V
59		(60) PK DET
57	SIGN	
55	A0	(56) A1
53	A2	(54) A3
51		
49	$\overline{STB}$ 2	
47	D0	(48) D1
45	D2	(46) D3
43	D4	(44) D5
41	D6	(42) D7
39	$\overline{RQR}$.	
37		
35		
33		
31		
29		
27		
25		(26) MOD
23		(24) 1KHZ
21	CAR & MOD LEVEL OUT	
19	VOL 1	(20) VOL 2
17		
15	PCT AM	
13		(14) AD INPUT
11	AM MOD	(12) DEMOD OUT
9	REC AUD	(10) MOD OUT
7		(8) COUNTER INT
5		(6) AD INT
3		(4) 10.7 MHZ
1	SIG GND	(2) AUDIO

NT SIDE

SOLDER SIDE BD-EEPS-36388-0
COMPONENT SIDE BD-EEPS-36389-0
OL-EEPS-36390-B

parts

RTL4106A C

REFERE SYMB
C1
C2
C3
C4
C5
C6
C7
C8, 9, 10, 1
C12
C13
C14
C15, 16, 17
C18
C19
C20, 21
C22 thru 3
C37
C38 thru 5
C51 thru 5
C55
C56
C57
C58
C59
C60
C61
C62
C63
C64
C65
C66
C67
CR1
CR2
CR3
CR4
CR5
L1, 2
Q1
Q2, 3
Q4, 5
Q6
Q7, 8
R1 thru 5
R6
R7
R8
R9, 10, 11
R12
R13
R14
R15
R16
R17
R18
R19
R20
R21
R22
R23
R24
R25
R26, 27
R28
R29
R30
R31
R32
R33
R34
R35
R36
R37
R38, 39
R40
R41
R42
R43
R44
R45
R46, 47
R48
R49, 50
R51
R52
R53, 54

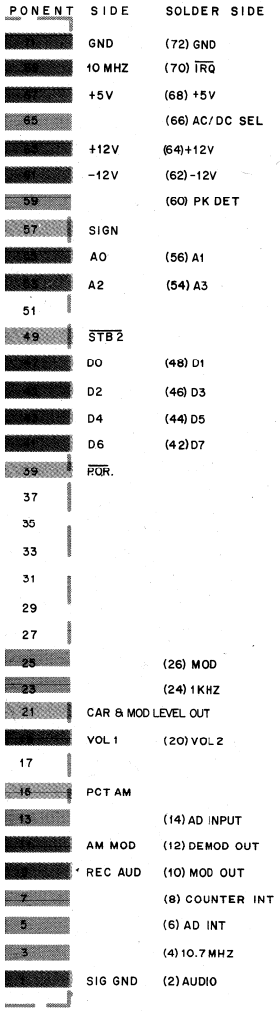

parts list

RTL4106A Counter Board — PL-8465-O

REFERENCE SYMBOL	MOTOROLA PART NO.	DESCRIPTION
		capacitor, fixed; pF ± 5%; 500 V: unless otherwise stated
C1	21-84494B46	180 ± 3%
C2	21-84494B42	27
C3	21-82187B10	270
C4	21-84494B34	68
C5	23-84908L01	2.2 uF ± 20%; 50 V
C6	21-82428B21	.01 uF + 10-30%; 100 V
C7	21-82187B27	.002 uF ± 10%; 100 V
C8, 9, 10, 11	8-84326A20	.0129 uF ± 2%; 50 V
C12	21-874352	1200 pF ± 5%; 300 V
C13	21-82372C07	.05 uF + 80-20%; 25 V
C14	21-82372C03	0.1 uF + 80-20%; 25 V
C15, 16, 17	23-84665F01	10 uF + 100-10%; 25 V
C18	21-82428B21	.01 uF + 10-30%; 100 V
C19	23-84665F01	10 uF + 100-10%; 25 V
C20, 21	21-82372C07	.05 uF + 80-20%; 25 V
C22 thru 36	21-82428B21	.01 uF + 10-30%; 100 V
C37	21-82372C07	.05 uF + 80-20%; 25 V
C38 thru 50	21-82428B21	.01 uF + 10-30%; 100 V
C51 thru 54		NOT USED
C55	21-82187B20	.001 uF ± 10%; 100 V
C56	21-82372C07	.05 uF + 80-20%; 25 V
C57	21-82187B14	.001 uF ± 10%; 100 V
C58	21-859937	24
C59		NOT USED
C60	21-82372C03	0.1 uF + 80-20%; 25 V
C61		NOT USED
C62	8-11017A03	.0022 uF ± 5%; 50 V
C63	21-82372C03	0.1 uF + 80-20%; 25 V
C64	21-82537B22	560 pF ± 5%; 100 V
C65	21-82372C07	.05 uF + 80-20%; 25 V
C66	21-82187B14	.001 uF ± 10%; 100 V
C67	21-82372C07	.05 uF + 80-20%; 25 V
		diode: (see note)
CR1		NOT USED
CR2	48-83654H01	silicon
CR3		NOT USED
CR4	48-83654H01	silicon
CR5	48-84616A01	silicon
		coil, rf:
L1, 2	24-82549D41	choke: 100 uH
		transistor: (see note)
Q1	48-869570	NPN; type M9570
Q2, 3		NOT USED
Q4, 5	48-869570	NPN; type M9570
Q6	48-869528	NPN; type M9528
Q7, 8	48-869570	NPN; type M9570
		resistor, fixed: ± 5%; 1/4 W: unless otherwise stated
R1 thru 5	6-11009C83	27k
R6	6-11009C65	4.7k
R7	6-11009C83	27k
R8	6-11009C49	1k
R9, 10, 11	6-11009C83	27k
R12	6-11009C73	10k
R13	6-10621B94	1.00k ± 1%; 1/8 W
R14	6-83175C03	10k ± 1%
R15	6-10621C63	5.11k ± 1%; 1/8 W
R16	6-83175C03	10k ± 1%
R17	18-83452F14	variable; 10k
R18	6-10621C27	2.15k ± 1%; 1/8 W
R19	6-10621D88	100k ± 1%; 1/8 W
R20	6-84444A75	110k ± 1%; 1/8 W
R21	18-83452F14	variable; 10k
R22	6-10621C75	6.81k ± 1%; 1/8 W
R23	6-10621D88	100k ± 1%; 1/8 W
R24	6-10621A97	100 ± 1%; 1/8 W
R25	6-10621D88	100k ± 1%; 1/8 W
R26, 27	6-11009C83	27k
R28	6-11009C73	10k
R29	6-10621C70	6.04k ± 1%; 1/8 W
R30	6-11009C61	3.3k
R31	6-10621C63	5.11k ± 1%; 1/8 W
R32	6-10621D42	33.2k ± 1%; 1/8 W
R33	6-10621C70	6.04k ± 1%; 1/8 W
R34	6-11009C43	560
R35		NOT USED
R36	6-11009C43	560
R37	6-11009C73	10k
R38, 39	6-10621C53	4.02k ± 1%; 1/8 W
R40	18-83452F14	variable; 10k
R41	6-11009C75	12k
R42	18-83452F01	variable; 2k
R43		NOT USED
R44	6-11009C83	27k
R45	6-11009C67	5.6k
R46, 47	6-11009C63	3.9k
R48	6-11009C74	11k
R49, 50	6-11009C91	56k
R51	6-11009C73	10k
R52	6-11009C83	27k
R53, 54	6-10621D84	90.9k ± 1%; 1/8 W

REFERENCE SYMBOL	MOTOROLA PART NO.	
R55	6-11009C74	11k
R56	6-11009C77	15k
R57, 58, 59	6-10621D58	48.7k ± 1%; 1
R60	6-11009D14	470k
R61, 62, 63	6-10621D58	48.7k ± 1%; 1
R64, 65	6-11009C81	22k
R66	6-11009D06	220k
R67	6-11009C65	4.7k
R68	6-11009C99	120k
R69	6-11009C85	33k
R70	6-11009C60	3k
R71	6-11009C83	27k
R72	6-11009C59	2.7k
R73, 74	6-11009C01	10
R75	6-11009C98	110k
R76		NOT USED
R77	6-124B30	2.2 meg
R78, 79	6-11009C49	1k
R80	6-11009C73	10k
R81	6-11009C49	1k
R82	6-11009C83	27k
R83	6-10621C70	6.04k ± 1%; 1
R84	6-10621C53	4.02k ± 1%; 1
R85 thru 89	6-11009C83	27k
R90	6-11009C73	10k
R91, 92	6-11009C65	4.7k
R93, 94	6-11009C56	2k
R95	6-11009C66	5.1k
R96	6-11009C63	3.9k
R97		NOT USED
R98	6-11009C73	10k
R99		NOT USED
R100	6-11009C43	560
R101		NOT USED
R102	18-83452F09	variable; 1k
R103	6-11009C97	100k
R104	6-11009C60	3k
R105	6-11009C45	680
R106	6-11009C49	1k
		thermistor:
RT101	6-80378A45	20k @ 25°C
		integrated cir
U1	51-84561L41	1 of 8 decode
U2	51-84561L48	quad 1 of 2 M
U3	51-82884L26	4-bit, up/dowr
U4	51-82884L51	quad AND ga
U5	51-82884L13	dual D flip-flo
U6	51-82884L04	quad NOR ga
U7	51-82884L03	hex inverter
U8	51-80365A20	32-bit counte
U9	51-80365A28	A/D converte
U10	51-82609M56	octal driver
U11	51-84561L77	hex driver
U12	51-80365A27	operational a
U13	51-82884L13	dual D flip-flo
U14	51-82609M17	octal flip-flop
U15	51-82884L54	dual 4 to 1 mu
U16	51-84561L75	quad operatic
U17	51-82884L65	triple 2 to 1 m
U18	51-80365A07	dual operatio
U19	51-82848M19	hex Schmitt t
U20, 21, 22	51-80365A07	dual operatio
U23	51-82884L12	dual decode c
U24	51-82884L13	dual D flip-flo
U25	51-82884L48	quad analog s
U26	51-80365A31	PLL
		voltage regul
VR1	51-80365A11	Zener
VR2		NOT USED
VR3	48-82256C15	Zener; type, 5
		mechanical parts
	45-80395A41	EJECTOR (GF
	26-80378A78	SHIELD
	9-84881F01	SOCKET, 24 c
	9-84881F06	SOCKET, 18 c
	84-80378A33	CIRCUIT BOA

note: For optimum performance, diodes, transistc be ordered by Motorola part numbers.

DESCRIPTION
acitor, fixed; pF ± 5%; 500 V:
ess otherwise stated
± 3%
uF ± 20%; 50 V
uF + 10-30%; 100 V
uF ± 10%; 100 V
9 uF ± 2%; 50 V
0 pF ± 5%; 300 V
uF + 80-20%; 25 V
uF + 80-20%; 25 V
F + 100-10%; 25 V
uF + 10-30%; 100 V
F + 100-10%; 25 V
uF + 80-20%; 25 V
uF + 10-30%; 100 V
uF + 80-20%; 25 V
uF + 10-30%; 100 V
T USED
uF ± 10%; 100 V
uF + 80-20%; 25 V
uF ± 10%; 100 V
T USED
uF + 80-20%; 25 V
T USED
2 uF ± 5%; 50 V
uF + 80-20%; 25 V
pF ± 5%; 100 V
uF + 80-20%; 25 V
uF ± 10%; 100 V
uF + 80-20%; 25 V
de: (see note)
T USED
on
T USED
on
on
, rf:
ke: 100 uH
sistor: (see note)
V; type M9570
T USED
V; type M9570
V; type M9528
V; type M9570
stor, fixed: ± 5%; 1/4 W:
ess otherwise stated
k ± 1%; 1/8 W
± 1%
k ± 1%; 1/8 W
± 1%
able; 10k
k ± 1%; 1/8 W
k ± 1%; 1/8 W
k ± 1%; 1/8 W
able; 10k
k ± 1%; 1/8 W
k ± 1%; 1/8 W
± 1%; 1/8 W
k ± 1%; 1/8 W
k ± 1%; 1/8 W
k ± 1%; 1/8 W
k ± 1%; 1/8 W
k ± 1%; 1/8 W
T USED
k ± 1%; 1/8 W
able; 10k
able; 2k
T USED
k ± 1%; 1/8 W

REFERENCE SYMBOL	MOTOROLA PART NO.	DESCRIPTION
R55	6-11009C74	11k
R56	6-11009C77	15k
R57, 58, 59	6-10621D58	48.7k ± 1%; 1/8 W
R60	6-11009D14	470k
R61, 62, 63	6-10621D58	48.7k ± 1%; 1/8 W
R64, 65	6-11009C81	22k
R66	6-11009D06	220k
R67	6-11009C65	4.7k
R68	6-11009C99	120k
R69	6-11009C85	33k
R70	6-11009C60	3k
R71	6-11009C83	27k
R72	6-11009C59	2.7k
R73, 74	6-11009C01	10
R75	6-11009C98	110k
R76		NOT USED
R77	6-124B30	2.2 meg
R78, 79	6-11009C49	1k
R80	6-11009C73	10k
R81	6-11009C49	1k
R82	6-11009C83	27k
R83	6-10621C70	6.04k ± 1%; 1/8 W
R84	6-10621C53	4.02k ± 1%; 1/8 W
R85 thru 89	6-11009C83	27k
R90	6-11009C73	10k
R91, 92	6-11009C65	4.7k
R93, 94	6-11009C56	2k
R95	6-11009C66	5.1k
R96	6-11009C63	3.9k
R97		NOT USED
R98	6-11009C73	10k
R99		NOT USED
R100	6-11009C43	560
R101		NOT USED
R102	18-83452F09	variable; 1k
R103	6-11009C97	100k
R104	6-11009C60	3k
R105	6-11009C45	680
R106	6-11009C49	1k
		thermistor:
RT101	6-80378A45	20k @ 25°C
		integrated circuit: (see note)
U1	51-84561L41	1 of 8 decoder
U2	51-84561L48	quad 1 of 2 MUX
U3	51-82884L26	4-bit, up/down counter
U4	51-82884L51	quad AND gate
U5	51-82884L13	dual D flip-flop
U6	51-82884L04	quad NOR gate
U7	51-82884L03	hex inverter
U8	51-80365A20	32-bit counter
U9	51-80365A28	A/D converter
U10	51-82609M56	octal driver
U11	51-84561L77	hex driver
U12	51-80365A27	operational amplifier
U13	51-82884L13	dual D flip-flop
U14	51-82609M17	octal flip-flop
U15	51-82884L54	dual 4 to 1 multiplexer
U16	51-84561L75	quad operational amplifier
U17	51-82884L65	triple 2 to 1 multiplexer
U18	51-80365A07	dual operational amplifier
U19	51-82848M19	hex Schmitt trigger
U20, 21, 22	51-80365A07	dual operational amplifier
U23	51-82884L12	dual decode counter
U24	51-82884L13	dual D flip-flop
U25	51-82884L48	quad analog switch
U26	51-80365A31	PLL
		voltage regulator: (see note)
VR1	51-80365A11	Zener
VR2		NOT USED
VR3	48-82256C15	Zener; type, 5.1 V
	mechanical parts	
	45-80395A41	EJECTOR (GRN); 2 used
	26-80378A78	SHIELD
	9-84881F01	SOCKET, 24 contact
	9-84881F06	SOCKET, 18 contact
	84-80378A33	CIRCUIT BOARD

note: For optimum performance, diodes, transistors, and integrated circuits must be ordered by Motorola part numbers.

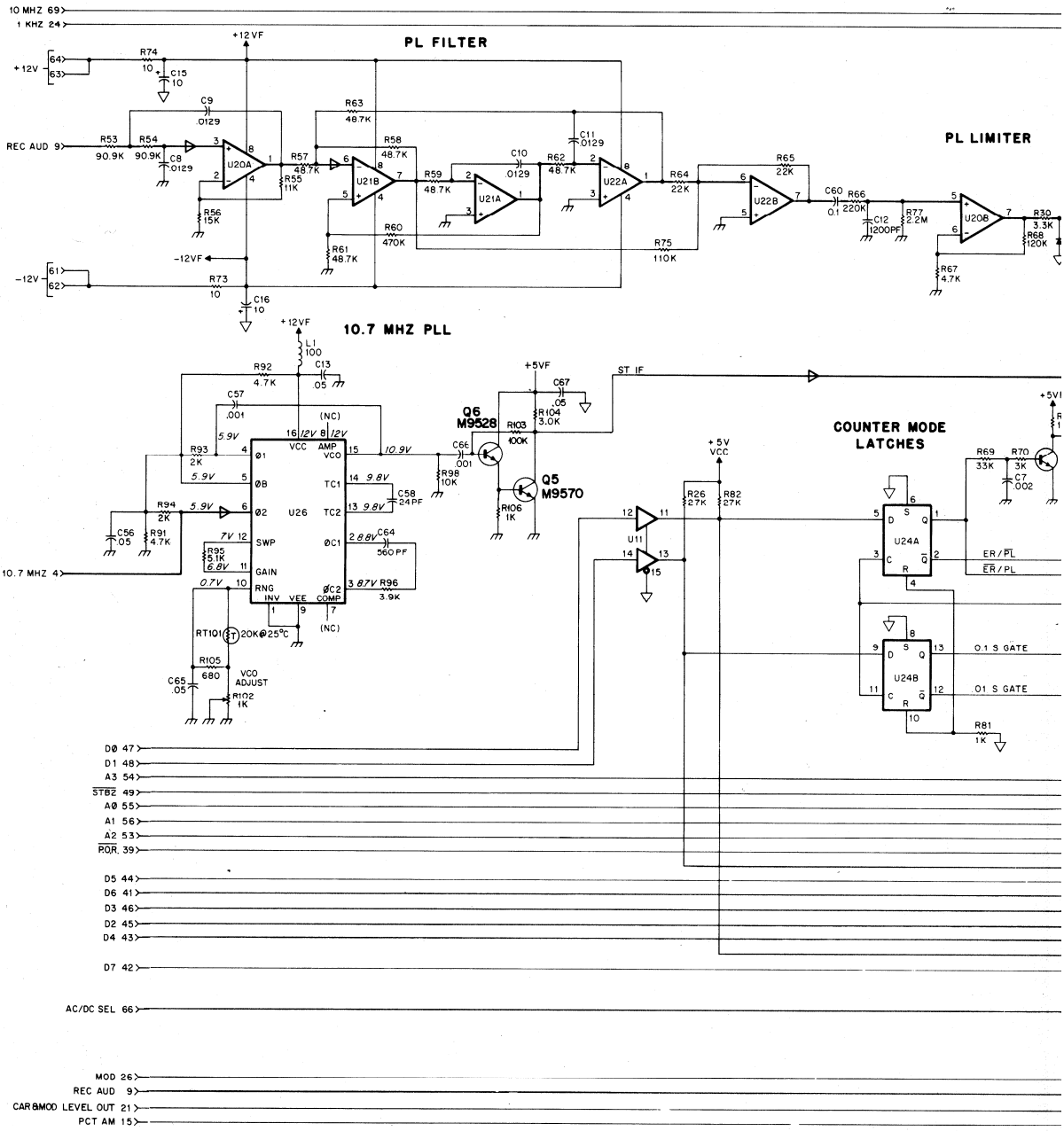
PL FILTER
PL LIMITER
10.7 MHZ PLL
COUNTER MODE LATCHES
10 MHZ 69
1 KHZ 24
+12V
-12V
REC AUD 9
+12VF
-12VF
+5VF
ST IF
10.7 MHZ 4
U20A
U21B
U21A
U22A
U22B
U20B
U26
U11
U24A
U24B
Q6 M9528
Q5 M9570
RT101 20K@25°C
VCO ADJUST R102 1K
ER/PL
0.1 S GATE
.01 S GATE
D0 47
D1 48
A3 54
STB2 49
A0 55
A1 56
A2 53
PQR 39
D5 44
D6 41
D3 46
D2 45
D4 43
D7 42
AC/DC SEL 66
MOD 26
REC AUD 9
CAR&MOD LEVEL OUT 21
PCT AM 15

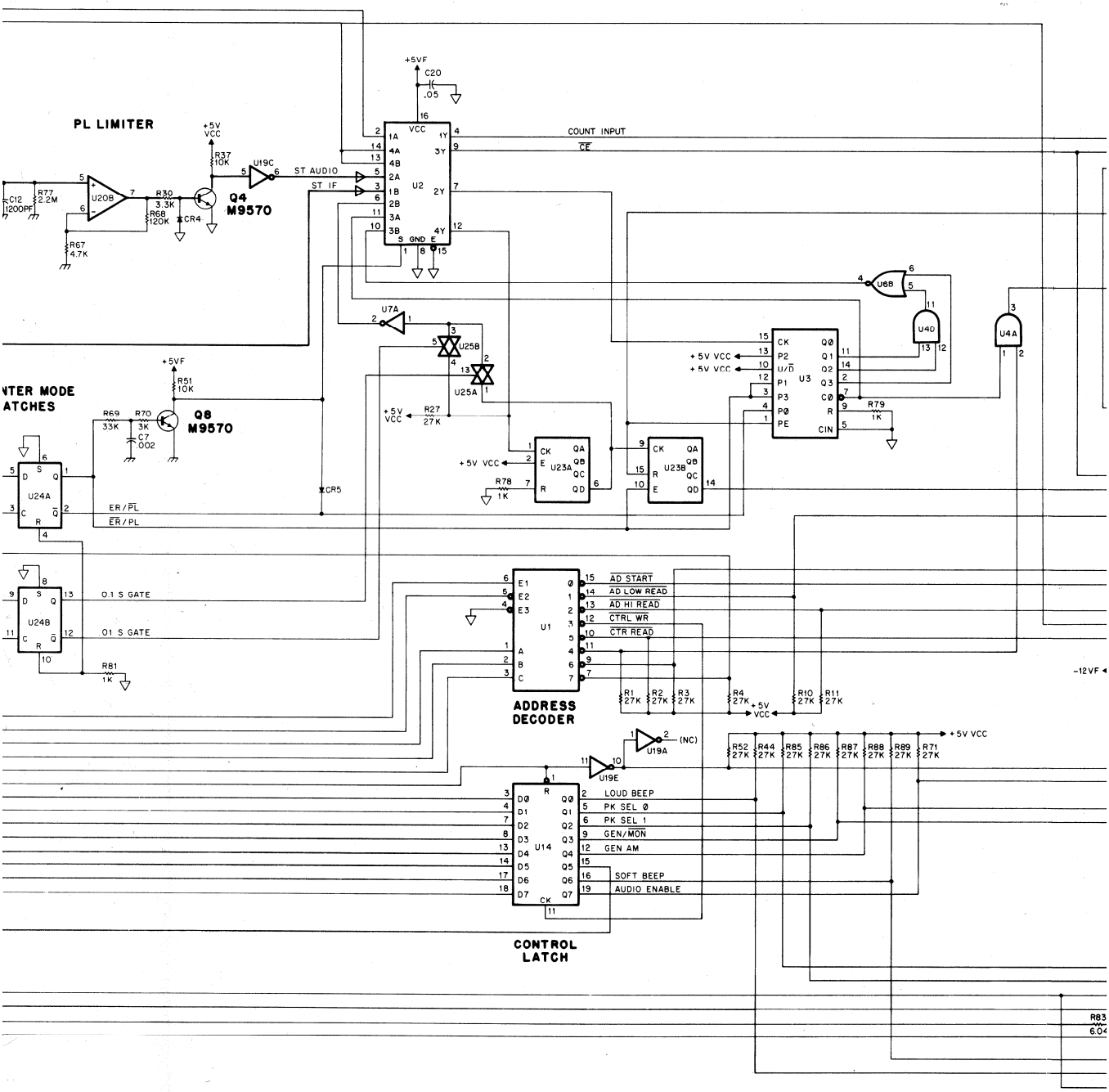
PL LIMITER
+5V VCC
R37 10K
U19C
ST AUDIO
ST IF
Q4 M9570
C12 1200PF
R77 2.2M
U20B
R30 3.3K
R68 120K
CR4
R67 4.7K
+5VF
C20 .05
U2
COUNT INPUT
CE
U7A
U25B
U25A
R27 27K
+5V VCC
U68
U4D
U4A
U3
R79 1K
+5V VCC
+5V VCC
NTER MODE
ATCHES
+5VF
R51 10K
Q8 M9570
R69 33K
R70 3K
C7 .002
U24A
U24B
ER/PL
ER/PL
0.1 S GATE
.01 S GATE
R81 1K
CR5
U23A
U23B
R78 1K
+5V VCC
U1
AD START
AD LOW READ
AD HI READ
CTRL WR
CTR READ
ADDRESS DECODER
R1 27K
R2 27K
R3 27K
R4 27K
R10 27K
R11 27K
+5V VCC
-12VF
U19A
(NC)
U19E
R52 27K
R44 27K
R85 27K
R86 27K
R87 27K
R88 27K
R89 27K
R71 27K
+5V VCC
U14
LOUD BEEP
PK SEL 0
PK SEL 1
GEN/MON
GEN AM
SOFT BEEP
AUDIO ENABLE
CONTROL LATCH
R83

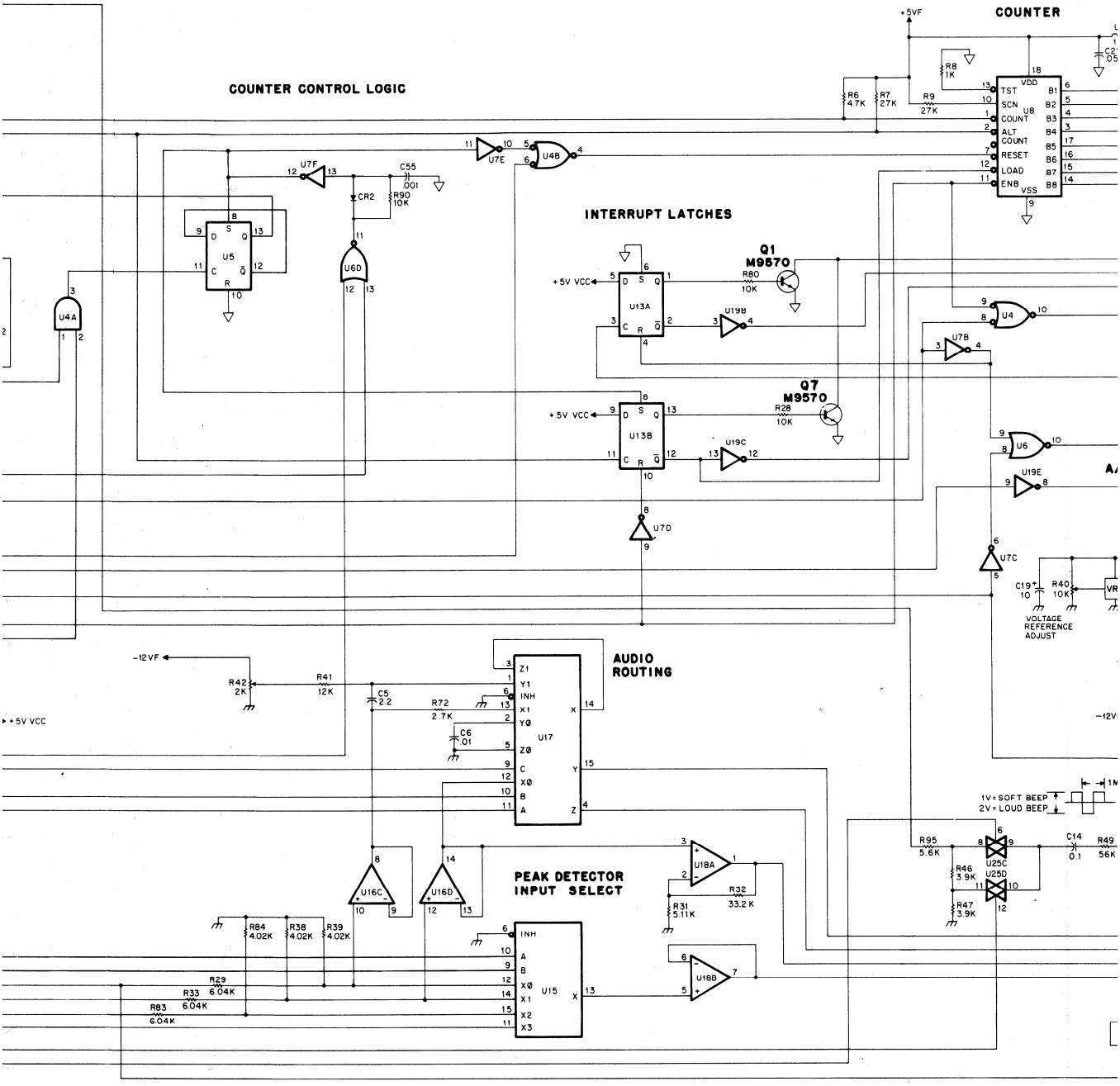
COUNTER
COUNTER CONTROL LOGIC
INTERRUPT LATCHES
AUDIO ROUTING
PEAK DETECTOR INPUT SELECT
VOLTAGE REFERENCE ADJUST
1V=SOFT BEEP
2V=LOUD BEEP
+5VF
+5V VCC
-12VF
U8
U5
U4A
U4B
U7E
U7F
U6D
U13A
U13B
U19B
U19C
U19E
U7D
U7C
U7B
U4
U6
Q1
M9570
Q7
M9570
U17
U15
U16C
U16D
U18A
U18B
U25C
U25D
R6 4.7K
R7 27K
R8 1K
R9 27K
R80 10K
R28 10K
R90 10K
C55 .001
CR2
R41 12K
R42 2K
C5 2.2
R72 2.7K
C6 .01
R84 4.02K
R38 4.02K
R39 4.02K
R29 6.04K
R33 6.04K
R83 6.04K
R31 5.11K
R32 33.2K
R95 5.6K
R46 3.9K
R47 3.9K
C14 0.1
R49 56K
C19 10
R40 10K

SCHEM

NOTES:

1. Unless otherwis microfarads, and
2. IC types are TTL a
3. Integrated circuit

Reference Designation	
U1	
U2	(
U3	
U4	(
U5, U13, U24	
U6	(
U7	
U8	
U9	
U10	(
U11	
U12	(
U14	(
U15	
U16	(
U17	
U18, 20, 21, 22	
U19	
U23	
U25	(
U26	

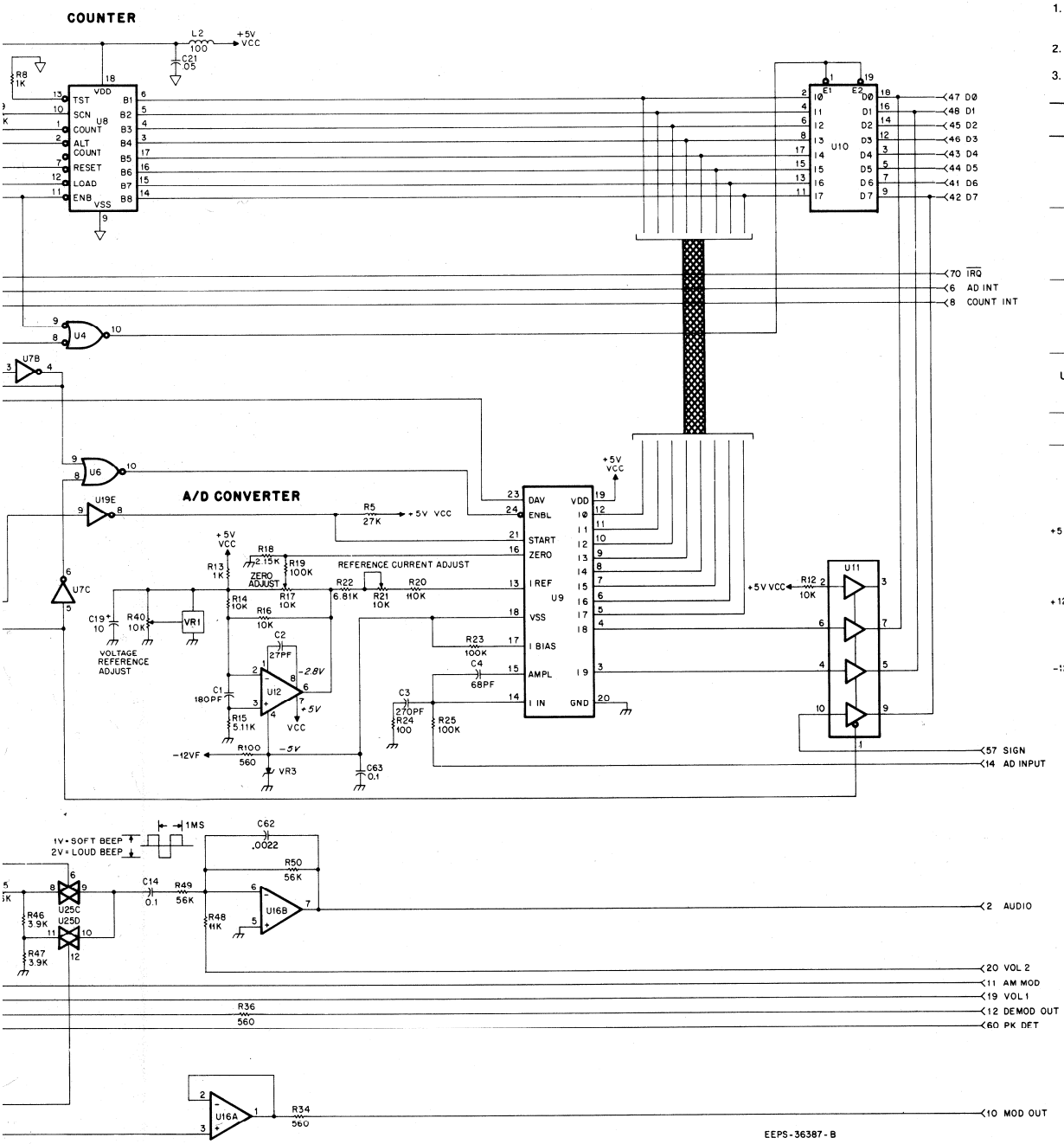

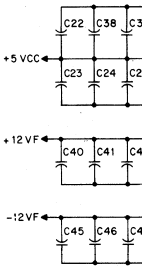

SIGNAI

COUNTER BOARD (A10)

MODEL RTL4106A
SCHEMATIC DIAGRAM, CIRCUIT BOARD DETAIL, AND PARTS LIST

NOTES:

1. Unless otherwise indicated, all resistors are in ohms, all capacitors are microfarads, and all inductors are microhenries.
2. IC types are TTL and CMOS devices.
3. Integrated circuit connections for this board are as follows:

Reference Designation	Mfgr's Description	+12 F	+5 V	Pwr GND	Sig GND	−5 V	−12 F
U1	1 of 8 Decoder		16	8			
U2	Quad 2 to 1 Multiplier		16	8			
U3	4 Bit Up/Down Counter		16	8			
U4	Quad AND Gate		14	7			
U5, U13, U24	Dual D Flip-Flop		14	7			
U6	Quad NOR		14	7			
U7	Hex Inverter		14	7			
U8	32 Bit Counter		18	9			
U9	A/D Converter		19		20		
U10	Octal Buffer		20	10			
U11	Hex Buffer		16	8			
U12	Op Amp		7				
U14	Octal D Flip-Flop		20	10			
U15	Dual 4 to 1 Multiplexer		16		8, 6		7
U16	Quad Op Amp	4					11
U17	Triple 2 to 1 Multiplexer		16		8, 6		7
U18, 20, 21, 22	Dual Op Amp	8					4
U19	Hex Schmitt Trigger		14	7			
U23	Dual Decade Counter		16	8			
U25	Quad Analog Switch		14	7			
U26	PLL	16		9			

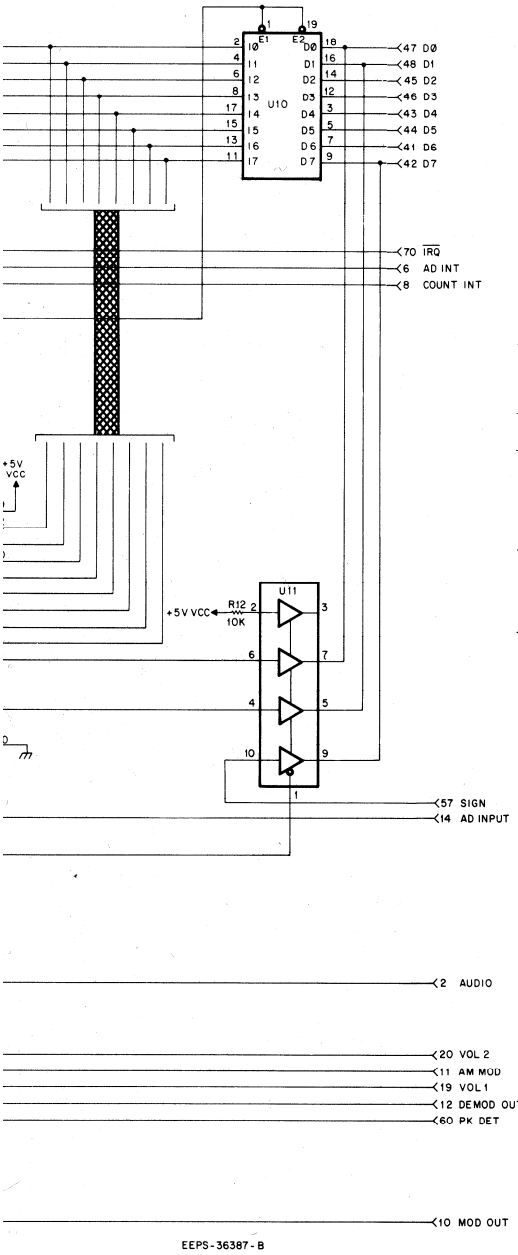

EEPS-36387-B

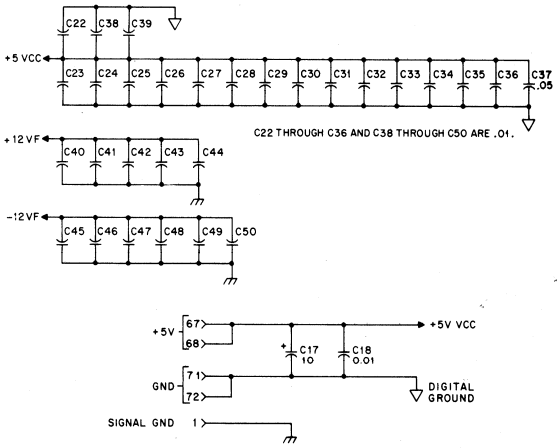

COUNTER BOARD

*Motorola No. **PEPS-36851-O***
(Sheet 2 of 2)
8/12/83-PHI

RF MODULE (A11)

MODEL RTL1014A

1. DESCRIPTION

1.1 The rf module is comprised of four sections: (1) wideband amplifier board, (2) rf wattmeter board, (3) rf interconnect board, and (4) rf mechanics. The rf mechanics include a feedthrough plug assembly (P7A & B) that interconnects the three printed circuit boards on a casting; a 0-70 dB Rotary STEP Attenuator with associated coaxial cable; two bottom covers and an RF VERNIER control.

1.2 Electrically, the rf module provides four primary rf functions: (1) high level generate (HI GEN) provides an rf output signal (AM, FM, or CW; 200 kHz-1 GHz) adjustable over the +13 dBm to −75 dBm (1.0 V to 40 uV) range; (2) low level generate (GEN) provides an rf output signal, as above for HI GEN, adjustable over the −48 dBm to −134 dBm (890 uV to .045 uV) range; (3) power monitor (PWR MON) provides a means of rf power measurement (1 MHz-1 GHz; 0.5-125 W @ ±10% accuracy), and (4) sensitive monitor (SENS MON) provides a means of "off the air" reception. The rf module also provides the necessary signal routing, analog signals for system processing, the status/control signals for each of the four functions, via an interface cable to the system control bus on the main interconnect board.

2. THEORY OF OPERATION

(Refer to functional block diagram and schematic diagrams)

2.1 RTL4095A RF INTERCONNECT BOARD

2.1.1 General

This printed circuit board provides the main interface to the system bus through a 24-pin ribbon cable and plug (J302).

2.1.2 Control Functions

2.1.2.1 U301 decodes address information and selects the network to read or drive the data bus (through J302), whenever $\overline{\text{STROBE 1}}$ goes low (enabled). Address 1100 (A3-AØ) selects two-thirds of U302, 1101 selects U303 and one third of U302 and 1110 selects U304. When the first portion of U302 is selected, the $\overline{\text{TEMP}}$ status and PROTECT signals (from the rf wattmeter board) appear on DØ and D7 of the data bus, respectively. The 0 and 10 positions of the Rotary STEP Attenuator position indicator switch (S1) appear on DØ and D1, respectively, and the 20 through 70 positions appear on D2 through D7, when the second portion of U302, and U303, are selected.

2.1.2.2 Resistors R301, R302, and R305-R312 provide pull-up current for the inputs of U302 and U303. Switch S1 is mounted on the rear shaft of the Rotary STEP Attenuator. When S1 is not in the 0 dB position, transistor Q303 is biased on and DS301 provides a visual indication of this condition to the user. When U304 is enabled via U301, the system mode functions are latched in to define the configuration of the wideband amplifier board, the rf wattmeter board, and the GEN ON/OFF condition. When U304, Q4 output is low, transistors Q302 and Q301 in turn are biased on, thus providing the switched +5 volts required to power the wideband amplifier board in both HIGH and LOW LEVEL GENERATE.

2.1.3 PROM Operation

2.1.3.1 A fused-link PROM U305 is used to provide module calibration data to the system microprocessor in the power monitor (PWR MON) and both high and low level generate (HI GEN and GEN) functions. The PROM is organized as two banks of 16 8-bit words. The four address lines (A3-AØ) select one of the 16 words of memory, while one of the two banks is selected by the latched WATTMETER ENABLE line of U304. When the power monitor (PWR MON) function has been selected, the WATTMETER ENABLE line is set high, addressing one-half of the PROM.

2.1.3.2 As the computer requires data, $\overline{\text{STROBE 3}}$ goes low (enabled), turning on transistor Q304 and providing +5 volts to U305-16. When the WATTMETER ENABLE line is low, the generate (GEN) func-

tion is implied and the other half of the PROM is available to be read by the microprocessor. The PROM is factory programmed uniquely for each rf module during final test and *must always remain with that particular unit.*

2.1.4 RF Output/Modulation Control

2.1.4.1 Potentiometer R320 is the RF VERNIER control and provides a variable dc voltage to the wideband amplifier board (J301-16), resulting in a 16 dB (minimum) range of rf output level in both high and low level generate (HI GEN and GEN). In the CW or FM generate modes, pin 18 of J302 "floats" and has no effect on the operation of the control.

2.1.4.2 However, in the AM mode, both modulating audio and a dc level shift are present at J302-18, resulting in a downward shift of the rf output level by approximately 4 dB. This is required to minimize distortion at high modulation levels. Since both the dc and audio levels are controlled by this potentiometer, the percentage of modulation tends to remain constant as the rf level is varied. Capacitors C332 and C333 and resistor R319 provide audio frequency compensation.

2.1.5 DC Voltage Distribution

Each power supply line (+5 V, +12 V, & −12 V) is filtered on this board before distribution to the other boards in the module. The LO/HI BAND (J302-15), CAR & MOD LEVEL OUT (J302-16), ALC (J302-14) and POWER METER (J302-17) are all analog signals and are not processed on this board.

2.2 RTL4094A RF WATTMETER BOARD

2.2.1 Detector, Differential, and Summing Amplifiers

2.2.1.1 In the power monitor (PWR MON) function rf power from the radio under test, is applied to J101, and attenuated by a 14 dB, 125 W attenuator AT101. This reduced power level is applied to 50-ohm load AT102 through relay K101. The peak of the voltage produced across the load is detected by diode CR105 and the resulting dc level is applied to a three-stage instrumentation style amplifier U101A, C, and D.

2.2.1.2 Thermistor RT101 provides compensation for changes in the internal temperature of the compartment, while diode CR107 and operational amplifier U101A provide temperature compensation for diode CR105. The detected signal is amplified by U101C, the output of which is summed in U101D, differentially with the output of the reference amplifier U101A. The signal at the output of U101D is passed directly through the rf interconnect board to the analog interface board for additional processing. Because of the diode detector CR105, this output signal is directly proportional to the square of the power applied. Potentiometer R143 provides Offset adjustment, while R122 provides Gain adjustment. For 125 watts of input power, the 50 ohm load AT102 dissipates only 5 watts, with the balance absorbed by the 14 dB, 125 watt attenuator AT101.

2.2.2 RF Switch and Over Power Protection

2.2.2.1 Operational amplifier U102 (connected as a comparator) and transistors Q101 and Q102 are used to provide control of relays K101 and K102. Since Q101 provides an inverting signal to Q102, relay K101 is always energized when K102 is not (exclusive OR configuration). This condition is forced: (1) if the system microprocessor causes the latched WATTMETER ENABLE line to go high, or; (2) the detector network, consisting of diodes CR101 and CR109 responds (through resistor R132) to an rf voltage at the input to AT101. The dc level produced from either source is summed at pin 2 of U102; U102 output goes low and turns off transistor Q101 (and thus relay K102) and enables relay K101 via transistor Q102.

2.2.2.2 Diodes CR108 and VR101 act to speed up the opening of relay K102's contacts should condition (2) above occur. Also, under this condition, transistor Q101 causes the PROTECT line output signal to go high, which informs the system microprocessor that rf power may have been applied to J101, while the FUNCTION switch was set to other than the PWR MON position. Also, in the PWR MON function, capacitive coupling around relay K102 allows enough signal to pass through J102 to enable the receiver to monitor the modulation on the rf power source.

2.2.2.3 In the sensitive monitor (SENS MON) or high level generate (HI GEN) functions, relay K101 is set the same as for PWR MON, via the WATTMETER ENABLE line. Also, relay K103 is closed, since the system microprocessor sets the latched ANTENNA ENABLE line high, turning on transistor Q103. In the former case, signals present at the ANTENNA connector (J6 on the front panel) are routed to J106, through relay K103 to J102, through the Rotary STEP Attenuator AT3 and finally to the first mixer on the wideband amplifier board. Likewise, in the high level generate (HI GEN) function, a signal generated by the wideband amplifier board is routed to ANTENNA connector J6.

2.2.3 Over Temperature Protection

The 14 dB, 125 watt attenuator AT101 is capable of dissipating 125 watts for approximately two minutes, at which time the temperature of the device exceeds the 100° C temperature rating. Thermistor RT102, resting on the head of one of the attenuator flange mounting screws, decreases in resistance to a point that causes the output of comparator U101B to go low. This signal

causes the microprocessor to activate the service monitor audible alarm and disable certain functions until the applied rf power is removed and AT101 has had ample time to cool off.

2.3 RTL4093A WIDEBAND AMPLIFIER BOARD

2.3.1 General

The wideband amplifier board performs essentially two functions: First, in the generate (GEN and HI GEN) functions, the board amplifies a −10 dBm ±5 dB signal from the rf synthesizer module, providing an rf output signal of uniform and level response in the 200 kHz-1 GHz range. This signal in the high level generate (HI GEN) function is in the +13 dBm to −5 dBm range (using the RF VERNIER control with the Rotary STEP Attenuator AT3 set to 0 dB). This range may be extended to −75 dBm (using the Rotary STEP Attenuator AT3 set to 70 dB). Likewise, in the low level generate (GEN) function, the signal is in the −48 dBm to −64 dBm range (using the RF VERNIER control and the built-in 14 dB attenuator AT101 on the RF wattmeter board with the Rotary STEP Attenuator AT3 set to 0 dB). This range may be extended to −134 dBm (using the Rotary STEP Attenuator AT3 set to 70 dB). Second, in the sensitive monitor (SENS MON) function, this board in conjunction with the receiver board enables the reception of "off the air" AM, FM or CW signals in the 1 MHz-1 GHz spectrum.

2.3.2 Control Inputs

This section executes the desired front panel functions available on the service monitor. Comparator U209 sets up the correct circuit conditions for the low and high level generate (GEN and HI GEN), and power monitor and sensitive monitor (PWR MON and SENS MON) functions, and provides buffered inputs for all four control lines. In HI GEN, U209D-14 goes high; in GEN, U209B-7 goes high and in PWR MON/SENS MON, U209C-8 goes high. When the rf synthesizer frequency is operating below 1 MHz, the LO/HI BAND line, U209A-1 goes high. This forces U210, via diode CR205, high for maximum gain in the rf amplifier chain and also activates U208A which routes the ALC error voltage produced by U206A over to the rf synthesizer leveling circuits via the ALC line. In addition, U208D switches in additional rf bypassing for the detectors at these lower frequencies.

2.3.3 RF Amplifier, HI GEN Switch & 30 dB Attenuator

2.3.3.1 The rf amplifier chain is comprised of hybrid devices U201-U205. The overall gain (when all five devices are active) is approximately 25 dB.

2.3.3.2 Devices U201 and U202 are active in all four functions (HI GEN, GEN, PWR MON and SENS MON). The HI GEN switching transistor Q206 turns on and applies voltage to devices U203-U205 in all functions except GEN. In the GEN function, transistor Q206 turns off, thereby removing voltage from stages U203-U205. Also, the 30 dB attenuator (R229, R230, R248 and R249) is switched in series with the GEN output path to further reduce the signal.

2.3.4 HI GEN Detector, GEN Detector, & Level Control

2.3.4.1 In the HI GEN function, when all amplifier stages are active, the HI GEN detector (CR217, C222, and L220) is also active, providing a dc voltage to the automatic leveling control (ALC) circuits. Since in this case, amplifier U203 is enabled (through transistor Q206), U203-1 has approximately 1.0 volt of dc bias. This back biases GEN detector diode CR231 as it is also biased (in part) by the same network (R266, R272 and R223) as the HI GEN detector.

2.3.4.2 In the GEN function, when only amplifier stages U201-202 are active, amplifier U203 input bias drops to 0 volts. This allows the GEN detector diode CR231 to become slightly forward biased thereby producting a dc voltage to the ALC circuits. Also, an additional dc biasing network (CR232, VR205, R283 and R284) is switched in via comparator U209B-7 output going high. This improves performance at the lowest levels of rf output because of an increase of forward biased diode CR231.

2.3.4.3 The outputs of both detectors are summed together at a high gain operational amplifier U207; U207 output is varying as a function of the rf level in either HI GEN or GEN. This output is routed via the CAR & MOD LEVEL OUT line to the analog interface board. The microprocessor processes this signal, along with the Rotary STEP Attenuator switch position data from the rf interconnect board, to display the correct rf output level (in dBm or microvolts) being produced, as well as any amplitude modulation that may be present on the rf carrier. The same output signal is also one of the two signals applied to summing amplifier U206A.

2.3.4.4 The AM MOD AUDIO signal from the rf interconnect board passes through analog gate U208C (switched on in either HI GEN or GEN by U209D or U209B, respectively) to amplifier U206B, and is the second signal to be summed at U206A. The output of U206A is therefore proportional to the level set by the RF VERNIER control and the detected rf level generated. The second signal becomes the reference for the first and acts to set the desired rf level. This output of U206A (through amplifier/buffer U210 and Q207), provides bias to a PIN diode attenuator network CR206, U207, and CR208 that essentially varies the gain of the rf amplifier line up.

2.3.5 Mixer, Matching Network & I-F Amplifier

2.3.5.1 Mixer E201 is a passive, double balanced type mixer and is employed only in the PWR MON and SENS MON functions. Diodes CR222 and CR223 will clamp excessive rf levels present at the mixer rf input port. The mixer injection signal is supplied from the rf synthesizer module, amplified to + 10 dBm by devices U201-U205 and attenuated by a 3 dB pad (R277, R278 and R279) to approximately 7 dBm. The mixer injection level is fixed at +7 dBm by resistor R211 supplying a fixed bias on the D.C. REF & AUD IN line via analog switch U208B, thereby indirectly controlling the bias on the PIN diode attenuator to provide constant rf amplifier gain. The injection frequency is *always* 10.7 MHz above or below (high or low side injection, respectively) the rf input signal such that a 10.7 MHz i-f output signal results from the mixing process.

2.3.5.2 Matching network (C228, C229 and L212) is a tunable filter that matches the mixer 50 ohm output port to the high impedance presented by Q213 gate.

2.3.5.3 10.7 MHz i-f amplifier stage Q213 provides approximately 20 dB of gain. Capacitor C232 is variable and provides a match between the relatively high drain output impedance of Q213 and the low termination impedance required at the ceramic filter input. Ceramic filters, FL201 and FL202, provide wide-band filtering of the 10.7 MHz i-f signal.

2.3.6 RF Switching

The HI GEN and GEN signals are routed through relays K202 and K203, respectively. In HI GEN, relays K201, K203 and K204 are open. In GEN, relay K201 is closed and relays K202 and K204 are open. In PWR MON and SENS MON, relays K201 and K204 are closed while K202 and K203 are open.

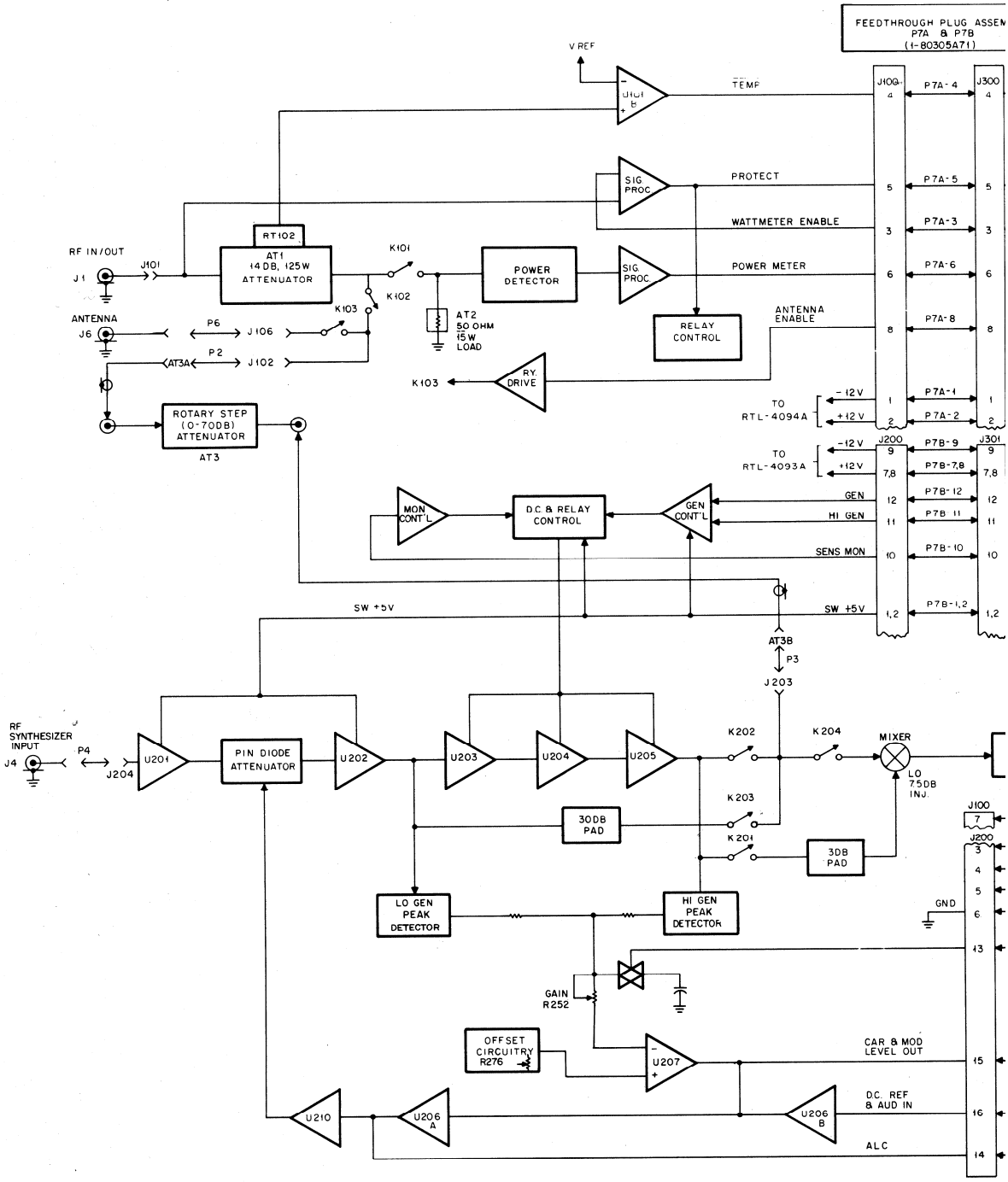
FEEDTHROUGH PLUG ASSEM
P7A & P7B
(1-80305A71)
V REF
U101 B
TEMP
J100
P7A-4
J300
SIG PROC
PROTECT
P7A-5
WATTMETER ENABLE
P7A-3
RT102
AT1
14 DB, 125W
ATTENUATOR
RF IN/OUT
J1
J101
K101
K102
POWER DETECTOR
SIG PROC
POWER METER
P7A-6
K103
AT2
50 OHM
15 W
LOAD
RELAY CONTROL
ANTENNA ENABLE
P7A-8
ANTENNA
J6
P6
J106
P2
AT3A
J102
K103
RY. DRIVE
TO
RTL-4094A
-12V
+12V
P7A-1
P7A-2
ROTARY STEP
(0-70DB)
ATTENUATOR
AT3
J200
J301
TO
RTL-4093A
-12V
+12V
P7B-9
P7B-7,8
MON CONT'L
D.C. & RELAY CONTROL
GEN CONT'L
GEN
HI GEN
P7B-12
P7B-11
SENS MON
P7B-10
SW +5V
SW +5V
P7B-1,2
AT3B
P3
J203
RF SYNTHESIZER INPUT
J4
P4
J204
U201
PIN DIODE ATTENUATOR
U202
U203
U204
U205
K202
K204
MIXER
LO 7.5DB INJ.
K203
30DB PAD
K201
3DB PAD
J100
J200
GND
LO GEN PEAK DETECTOR
HI GEN PEAK DETECTOR
GAIN R252
OFFSET CIRCUITRY R276
U207
CAR & MOD LEVEL OUT
U210
U206 A
U206 B
D.C. REF & AUD IN
ALC

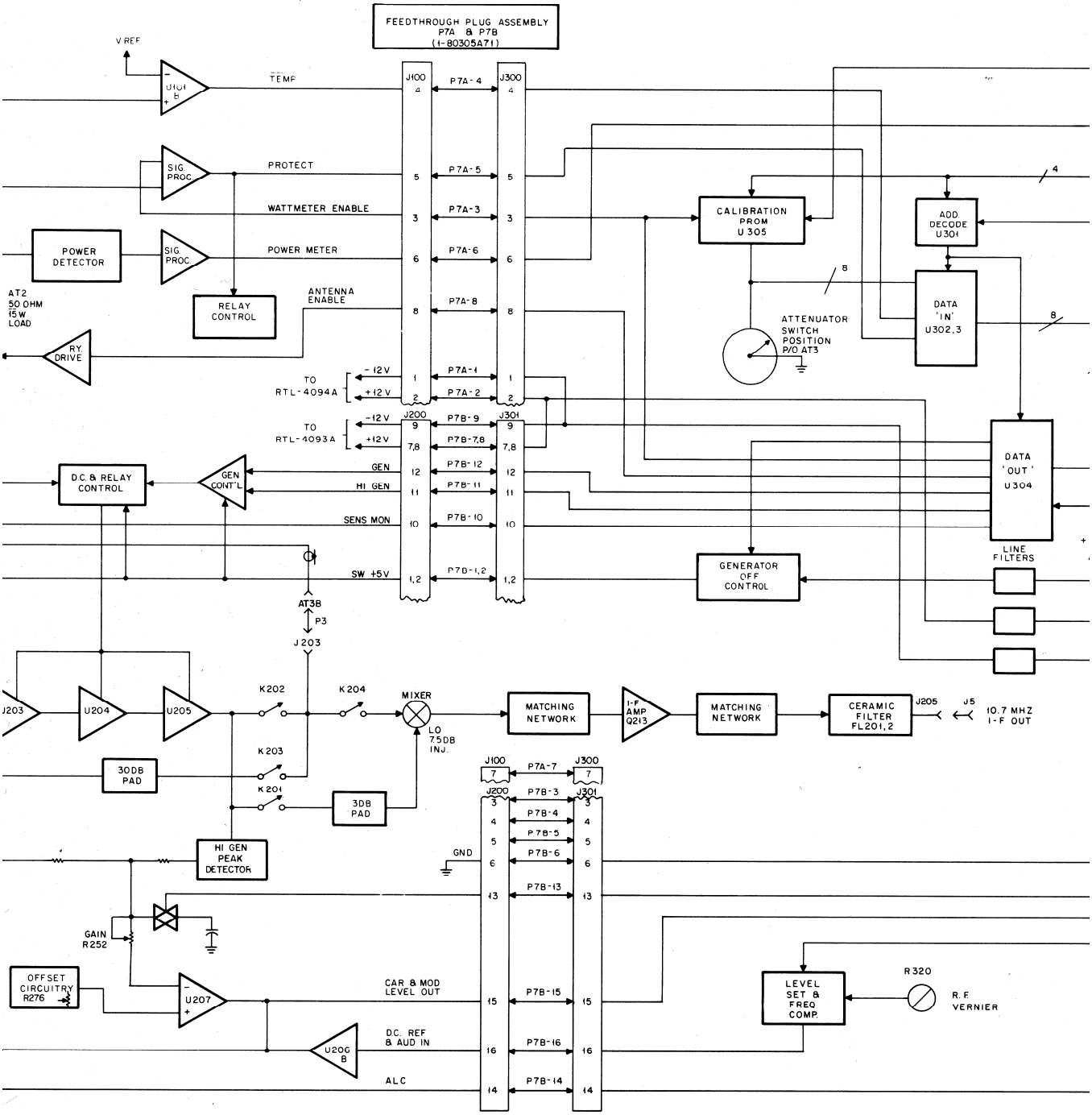
FEEDTHROUGH PLUG ASSEMBLY
P7A & P7B
(1-80305A71)
V REF
U101 B
TEMP
J100
J300
P7A-4
SIG PROC
PROTECT
P7A-5
WATTMETER ENABLE
P7A-3
POWER DETECTOR
SIG PROC
POWER METER
P7A-6
CALIBRATION PROM U305
ADD. DECODE U301
DATA 'IN' U302,3
AT2
50 OHM
15 W
LOAD
RELAY CONTROL
ANTENNA ENABLE
P7A-8
ATTENUATOR SWITCH POSITION P/O AT3
RY DRIVE
-12 V
+12 V
TO RTL-4094A
P7A-1
P7A-2
J200
J301
TO RTL-4093A
P7B-9
P7B-7,8
DATA 'OUT' U304
D.C. & RELAY CONTROL
GEN CONT'L
GEN
HI GEN
P7B-12
P7B-11
SENS MON
P7B-10
LINE FILTERS
SW +5V
P7B-1,2
GENERATOR OFF CONTROL
AT38
P3
J203
U203
U204
U205
K202
K204
MIXER
LO 7.5DB INJ.
MATCHING NETWORK
I-F AMP Q213
MATCHING NETWORK
CERAMIC FILTER FL201,2
J205
J5
10.7 MHZ I-F OUT
K203
30DB PAD
K201
30DB PAD
HI GEN PEAK DETECTOR
P7A-7
P7B-3
P7B-4
P7B-5
P7B-6
GND
P7B-13
GAIN R252
OFFSET CIRCUITRY R276
U207
CAR & MOD LEVEL OUT
P7B-15
LEVEL SET & FREQ COMP.
R320
R.F. VERNIER
U206 B
DC. REF & AUD IN
P7B-16
ALC
P7B-14

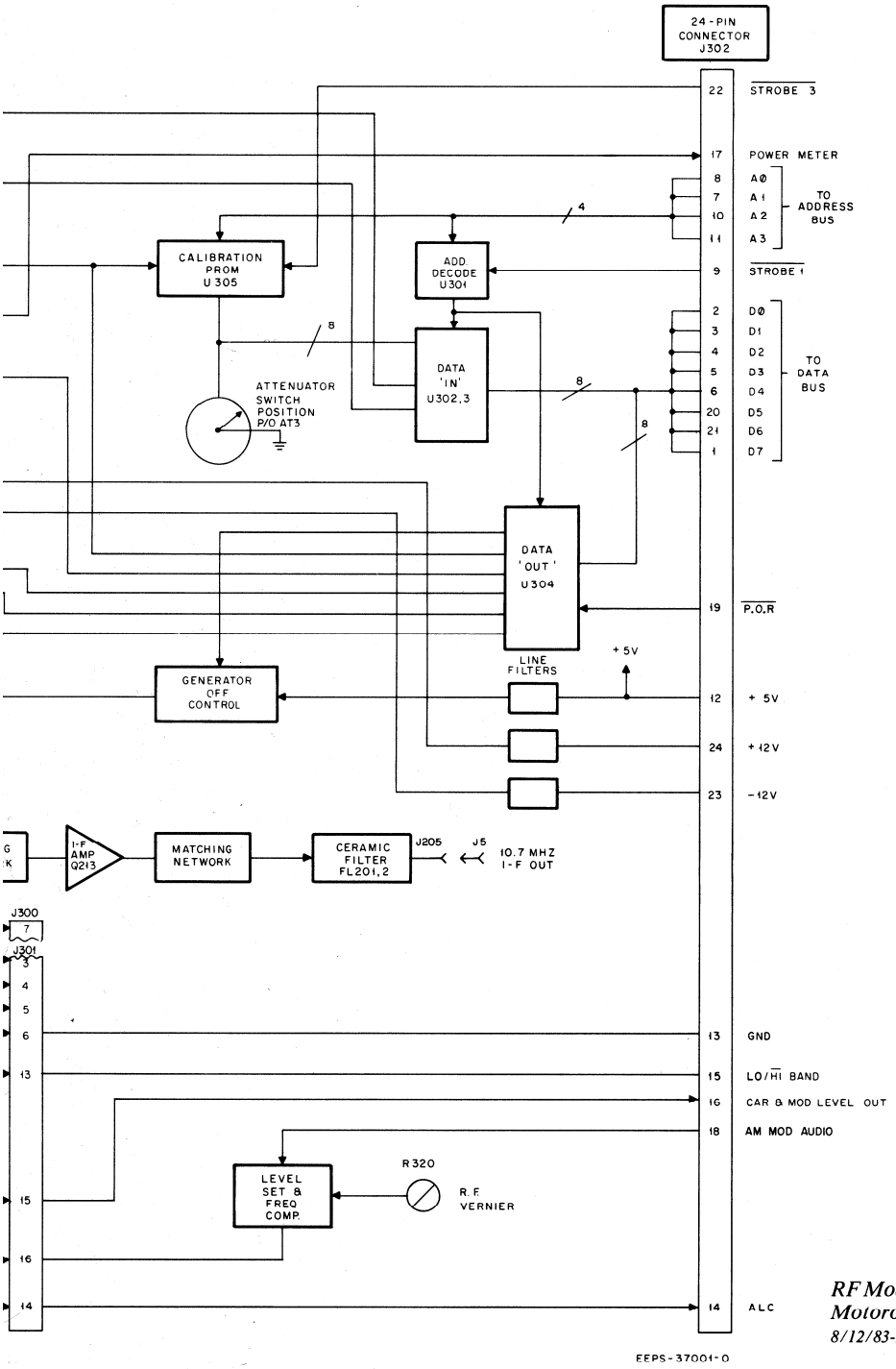

RF Module Functional Block Diagram
*Motorola No. **EEPS-37001-O***
8/12/83-PHI

RF MODULE (A11)

MODEL RTL1014A
INTERCONNECT DIAGRAM AND PARTS LIST

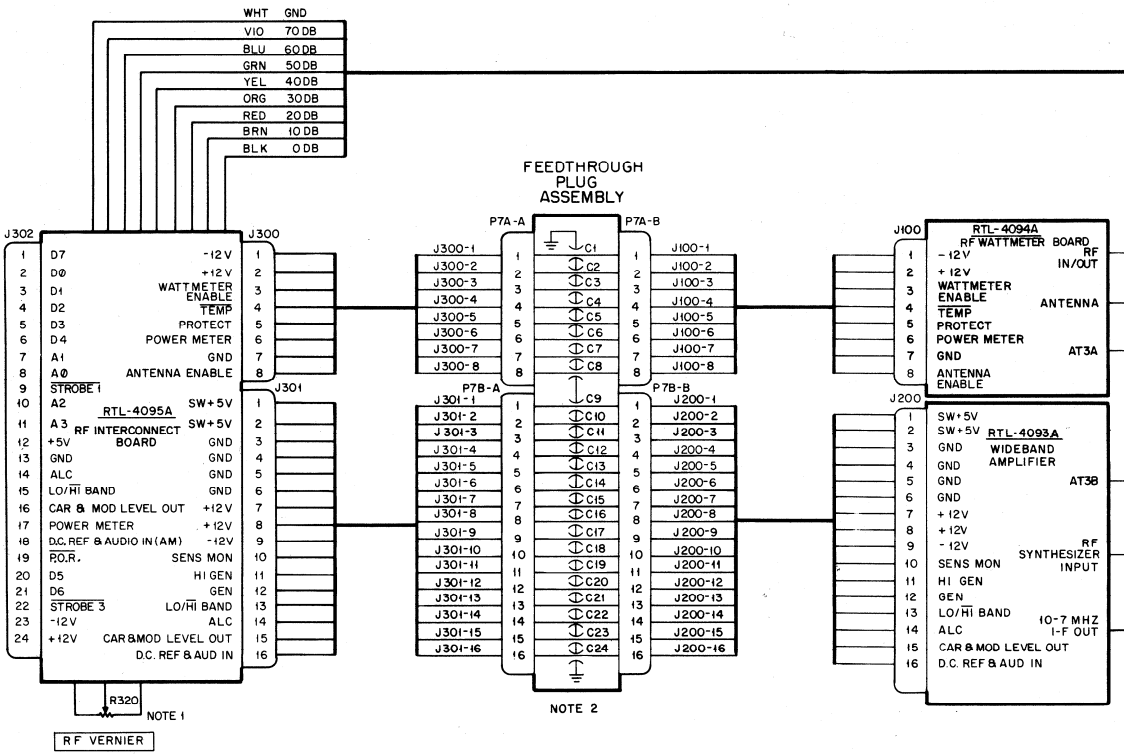

NOTES:

1. R320 is a front panel control. It is physically attached to the RTL-4095A.
2. Feedthrough capacitors C1 through C24 are 470 pF.
3. Rotary step attenuator AT3 is a front panel control. It is physically attached to the RTL-1014A RF module.
4. J1 and J6 are front panel connectors.

*Motorola No. **PEPS-37074-O***
8/12/83-PHI

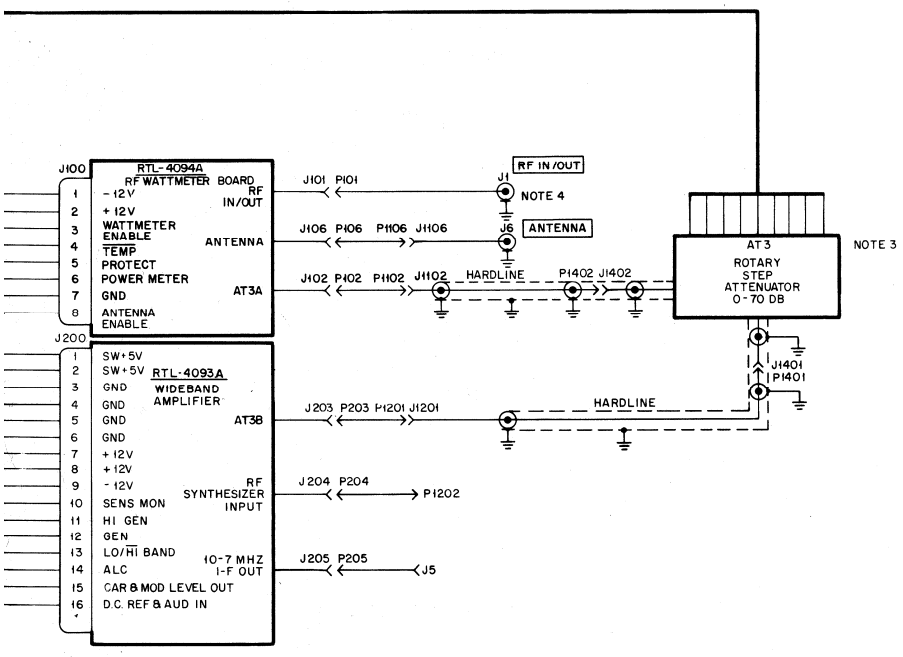

DEPS-36700-0

ıysically attached to the RTL-4095A.

ı C24 are 470 pF.

nt panel control. It is physically attached to

s.

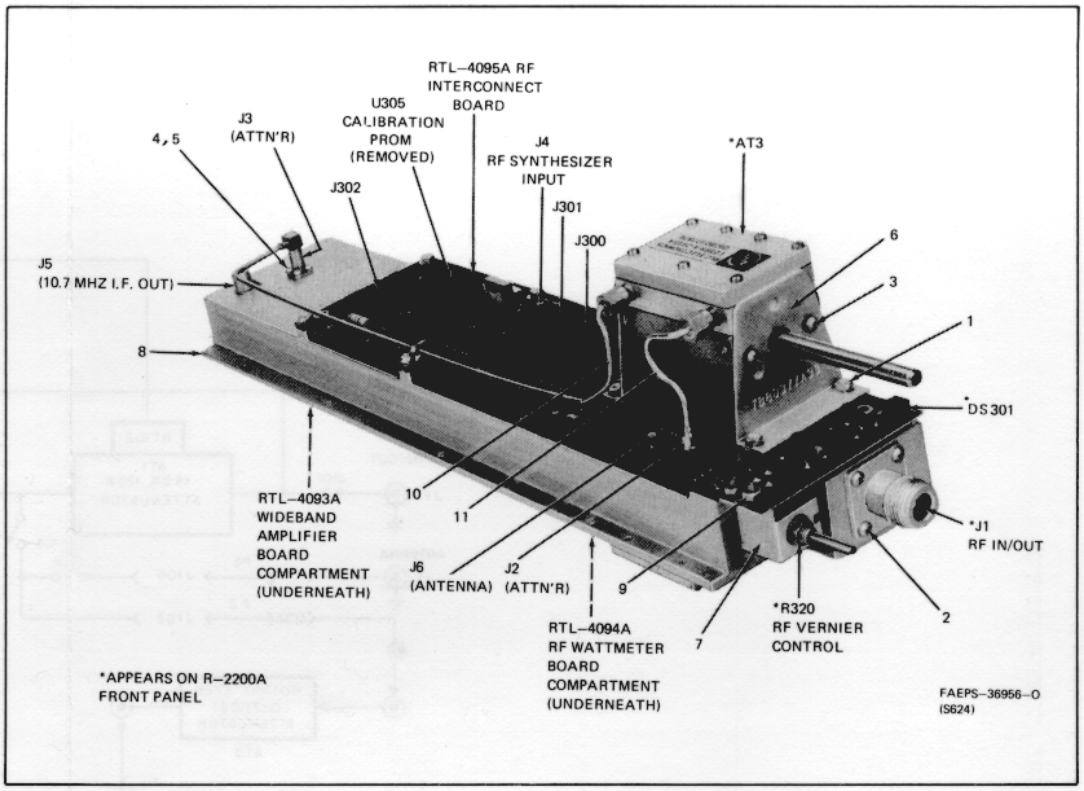

parts list

RTL1014A RF Module — PL-8480-O

REFERENCE SYMBOL	MOTOROLA PART NO.	DESCRIPTION
		capacitor, fixed:
P7A, P7B	1-80305A71	assembly rf feed-thru; includes:
C1 thru 24	21-84874K01	470 pF ± 20%; 250 V
	29-80377A64	PIN; 24 used
	64-80377A32	PLATE
		connector; receptacle:
J1	9-82741A01	female; single-contact
J2 thru 4	9-80377A71	female; SMB, single-contact
J5	9-84135B02	female; single-contact (phono)
J6	9-80377A71	female; SMB, single-contact
		resistor:
R320	18-80390A75	variable, 10k
		switch:
S1	1-80350A18	assembly, switch; includes:
	40-80378A28	SWITCH, rotary; 8-position
ref. no.		**mechanical parts**
AT3	1-80377A74	ATTENUATOR, pot assembly
1	3-138804	SCREW, machine; 4-40 × 5/16"; 8 used
2	3-139581	SCREW, machine; 4-40 × 5/16"; 6 used
3	3-2942	SCREW, machine; 4-40 × 3/16" Phillips round; 4 used
4	3-136782	SCREW, machine; #2-56 × 3/16" Phillips pan; 4 used
5	4-8406	LOCKWASHER #2 internal; 27 used
6	7-80377A33	BRACKET, atten; 2 used
7	7-80390A20	BRACKET
8	64-80377A29	CASTING
9	2-131435	NUT, 4-40; 2 used
10	1-80356A04	CABLE, coaxial (long hardline)
11	1-80356A06	CABLE, coaxial (short hardline)
		non-referenced items
	3-136890	SCREW, machine; 4-40 × 9/32"; 8 used
	4-140208	LOCKWASHER #4 split; 4 used
	15-80377A30	COVER (RF WM)
	15-80377A31	COVER (WBA)
	42-80395A06	CLIP
	43-80370A69	SPACER, M/F 4-40; 2 used
	43-80395A82	STANDOFF; 2 used
	55-84300B02	HANDLE; 4 used
	14-80395A02	INSULATOR
	14-80395A03	INSULATOR
	29-82713M01	TERMINAL, 9 used

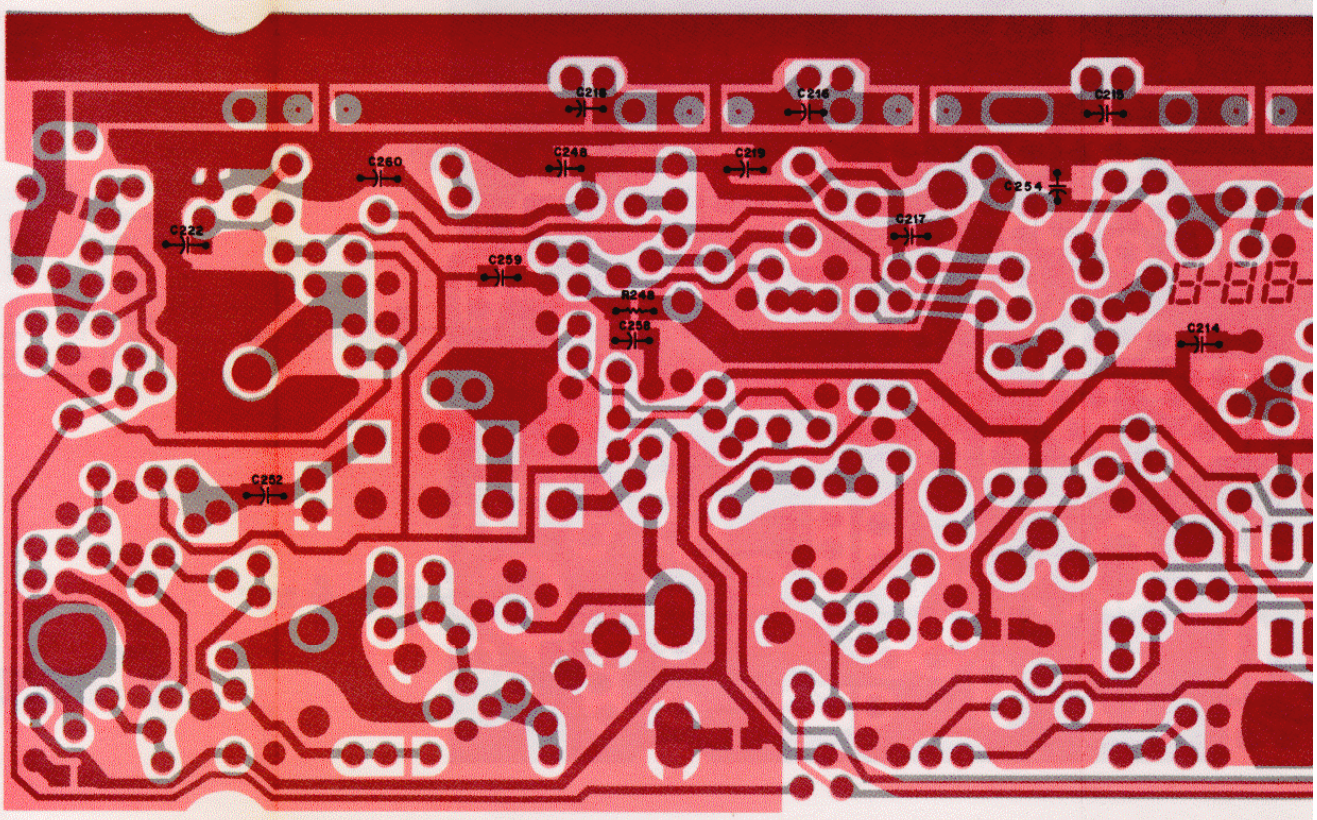

SHOWN FROM SOLDER SIDE
(COMPONENTS ARE CHIP CAPACITORS)

COMPONENT SIDE BD-EEPS-3631
SOLDER SIDE BD-EEPS-3631
OL-EEPS-3631

SC

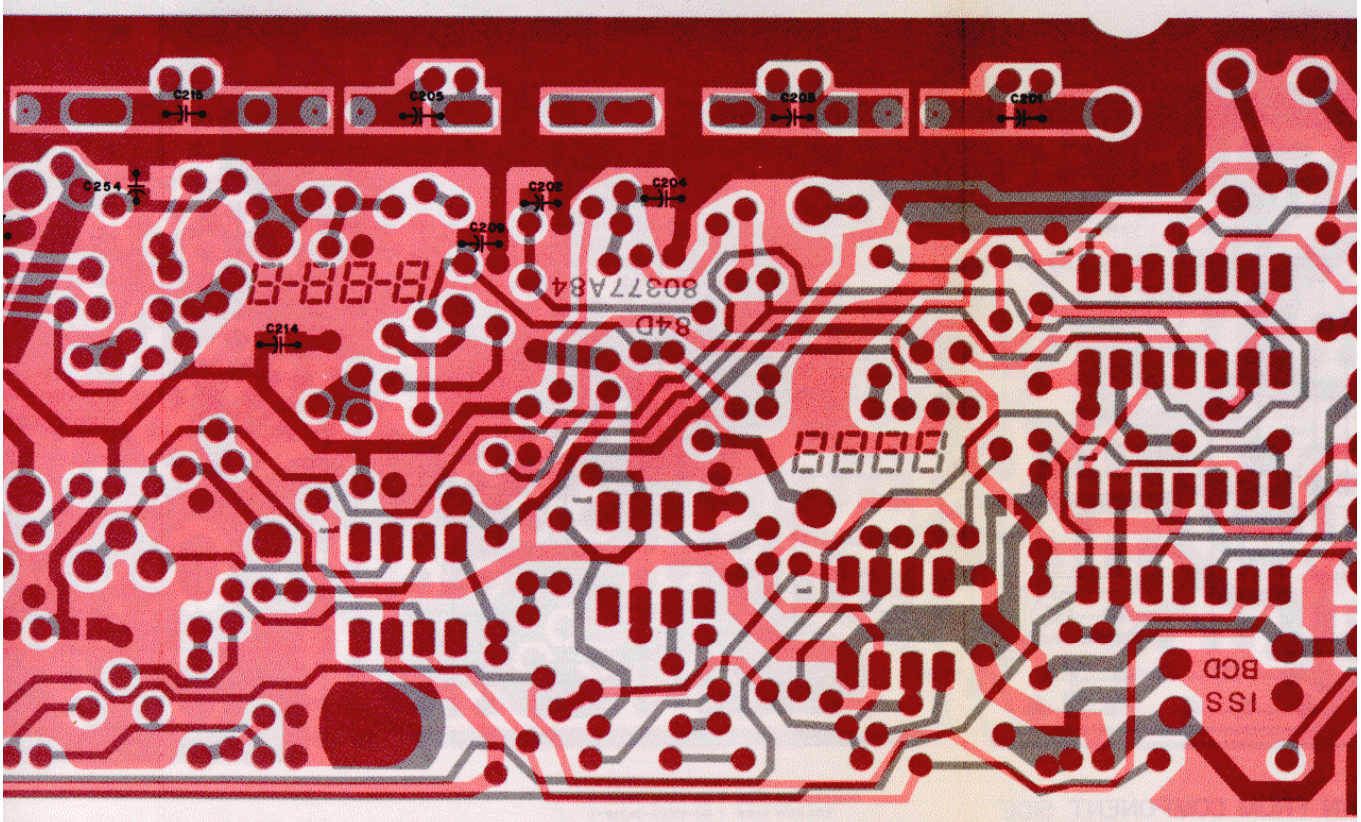

COMPONENT SIDE BD-EEPS-36317-0 (REVERSED)
SOLDER SIDE BD-EEPS-36316-0 (REVERSED)
OL-EEPS-36318-0

RF MODULE (A11)

WIDEBAND AMPLIFIER BOARD

MODEL RTL4093A
SCHEMATIC DIAGRAM, CIRCUIT BOARD DETAIL,
AND PARTS LIST

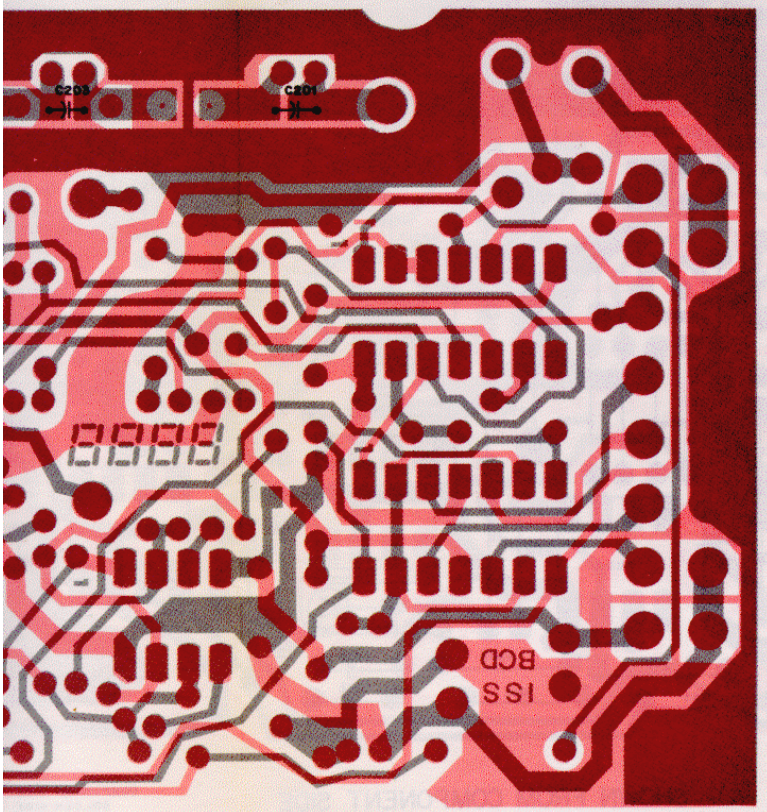

WIDEBAND AMPLIFIER BOARD

Motorola No. ***PEPS-36854-O***
(Sheet 1 of 4)
8/12/83-PHI

RF MODULE (A11)

WIDEBAND AMPLIFIER BOARD

MODEL RTL4093A
SCHEMATIC DIAGRAM, CIRCUIT BOARD DETAIL,
AND PARTS LIST

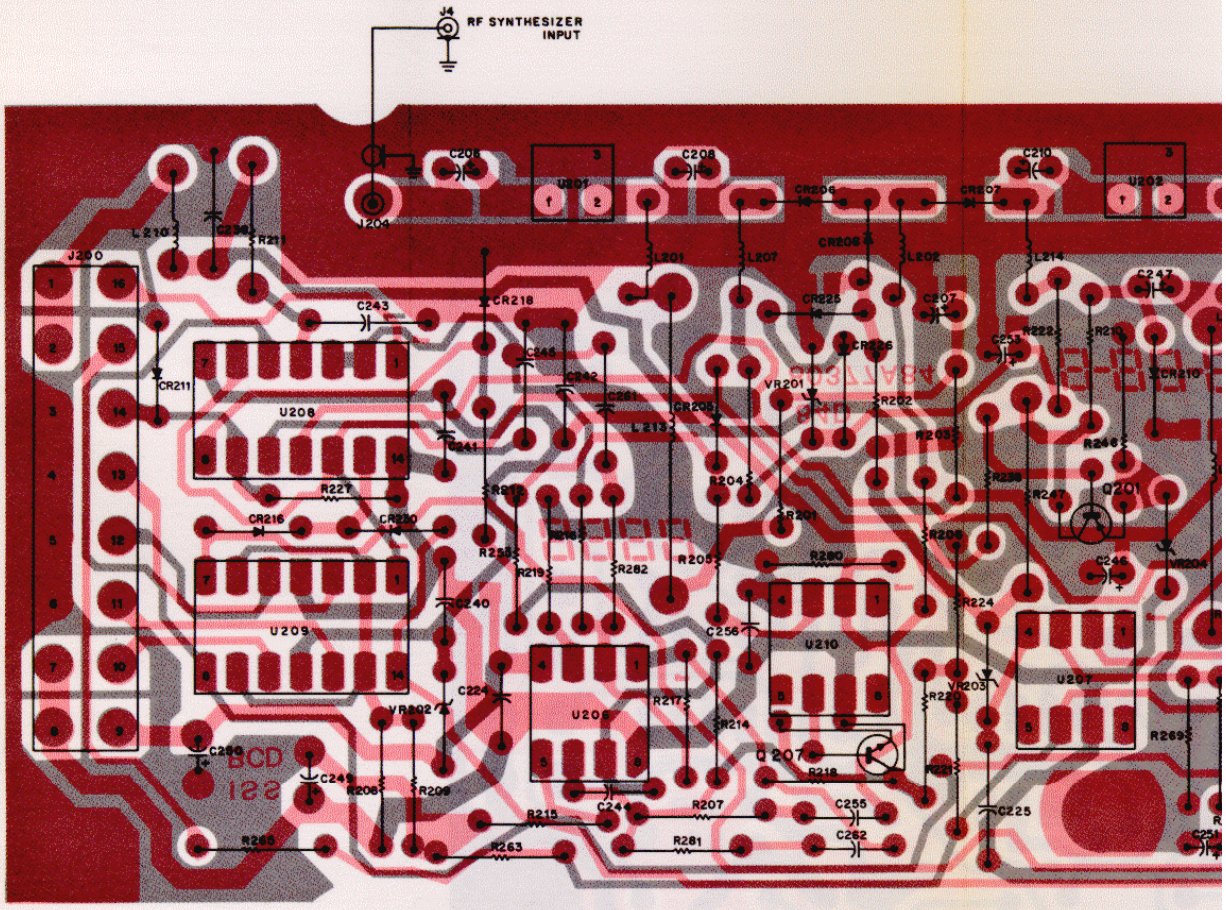

SHOWN FROM COMPONENT SIDE

COMPONENT SIDE
SOLDER SIDE

Motorola No. ***PEPS-36854-O***
(Sheet 2 of 4)
8/12/83-PHI