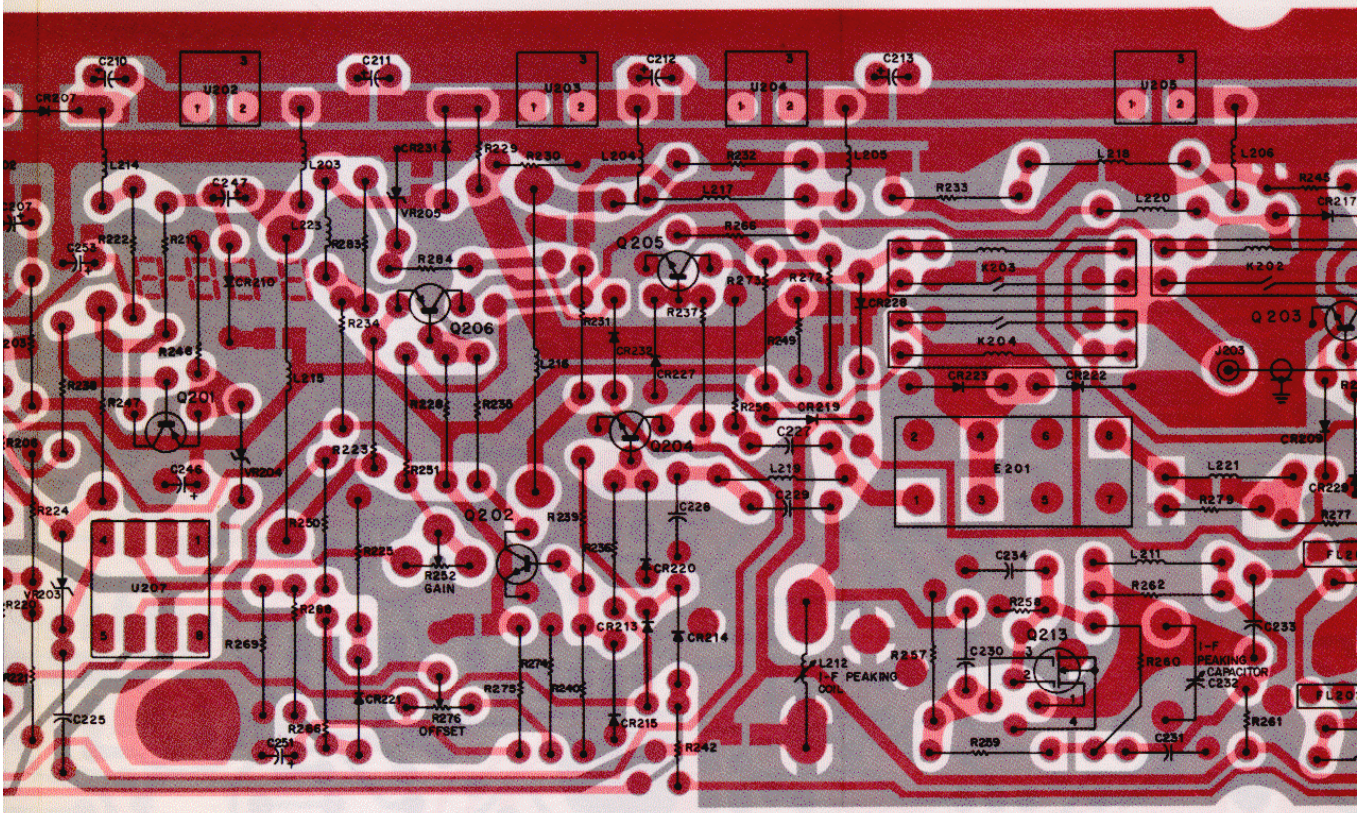

COMPONENT SIDE BD-EEPS-36317-0
SOLDER SIDE BD-EEPS-36316-0
OL-EEPS-36315-A

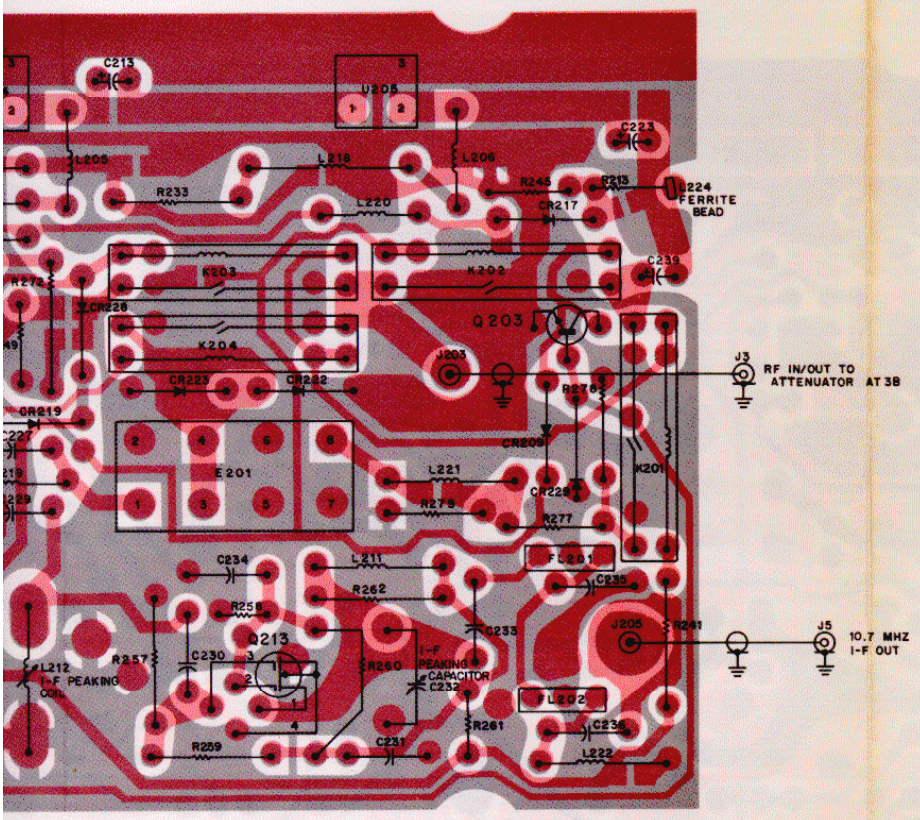

J201 DETAIL

SW +5V	1	16	D.C. REF & AUD IN
SW +5V	2	15	CAR & MOD LEVEL OUT
GND	3	14	ALC
GND	4	13	LO/$\overline{\text{HI}}$ BAND
GND	5	12	GEN
GND	6	11	HI GEN
+12 V	7	10	SENSITIVE MONITOR
+12 V	8	9	−12 V

LEGEND

INDICATES PORTION OF CONNECTOR (J3,4,5) THAT PASSES THRU CHASSIS.

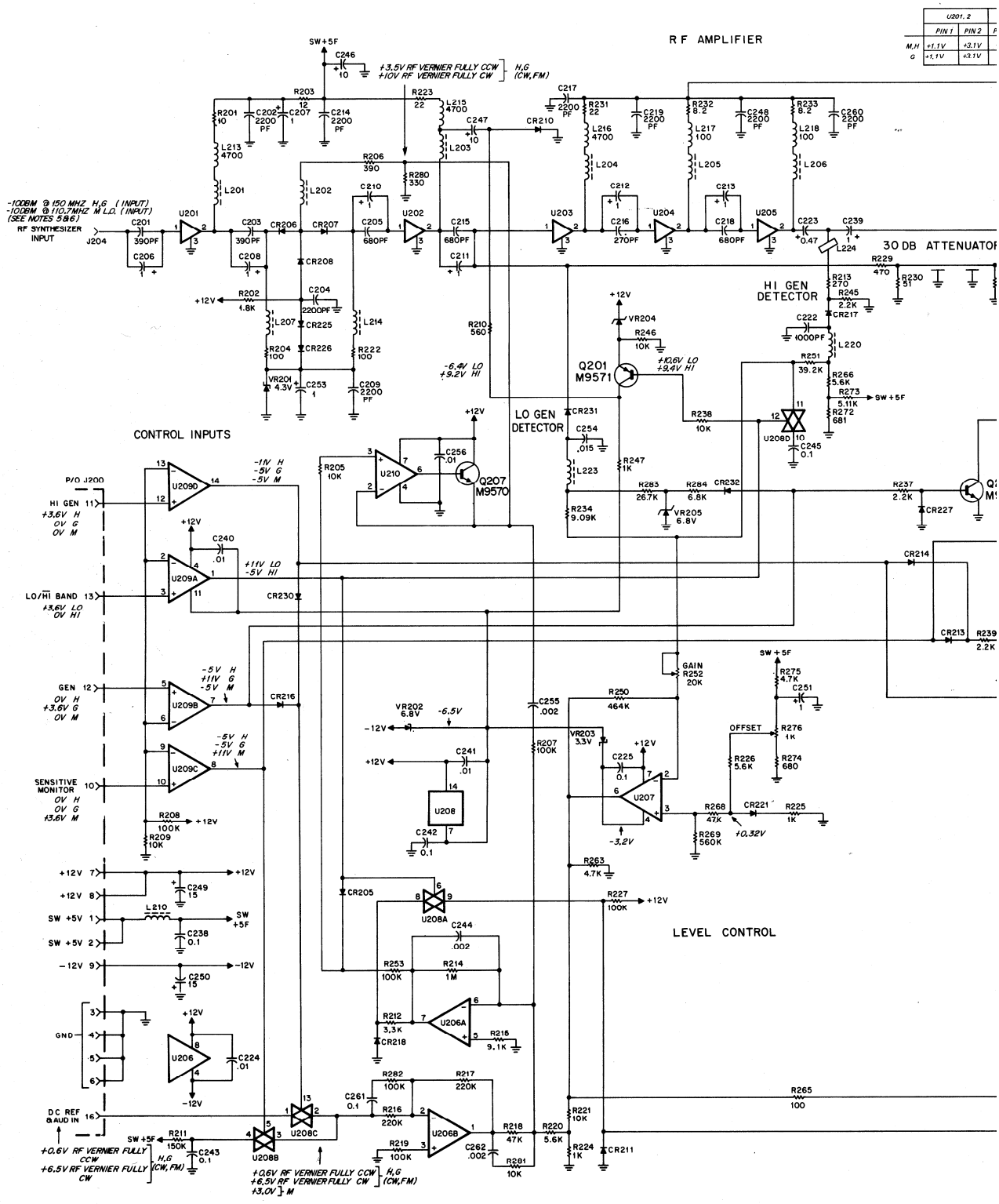
RF AMPLIFIER
30 DB ATTENUATOR
HI GEN DETECTOR
LO GEN DETECTOR
CONTROL INPUTS
LEVEL CONTROL
RF SYNTHESIZER INPUT
-10DBM @ 150 MHZ H,G (INPUT)
-10DBM @ 110.7MHZ M L.O. (INPUT)
(SEE NOTES 5&6)
+3.5V RF VERNIER FULLY CCW
+10V RF VERNIER FULLY CW
H,G (CW,FM)
+0.6V RF VERNIER FULLY CCW
+6.5V RF VERNIER FULLY CW
+0.6V RF VERNIER FULLY CCW
+6.5V RF VERNIER FULLY CW
+3.0V
M
Q201 M9571
Q207 M9570
GAIN R252 20K
OFFSET
GND
DC REF & AUD IN
HI GEN
LO/HI BAND
GEN
SENSITIVE MONITOR
P/O J200
SW +5F

	U201, 2		U203		U204, 5	
	PIN 1	PIN 2	PIN 1	PIN 2	PIN 1	PIN 2
M,H	+1.1V	+3.1V	+1V	+3.3V	+1.5V	+4.1 V
G	+1.1V	+3.1V	0V	0V	0V	0V

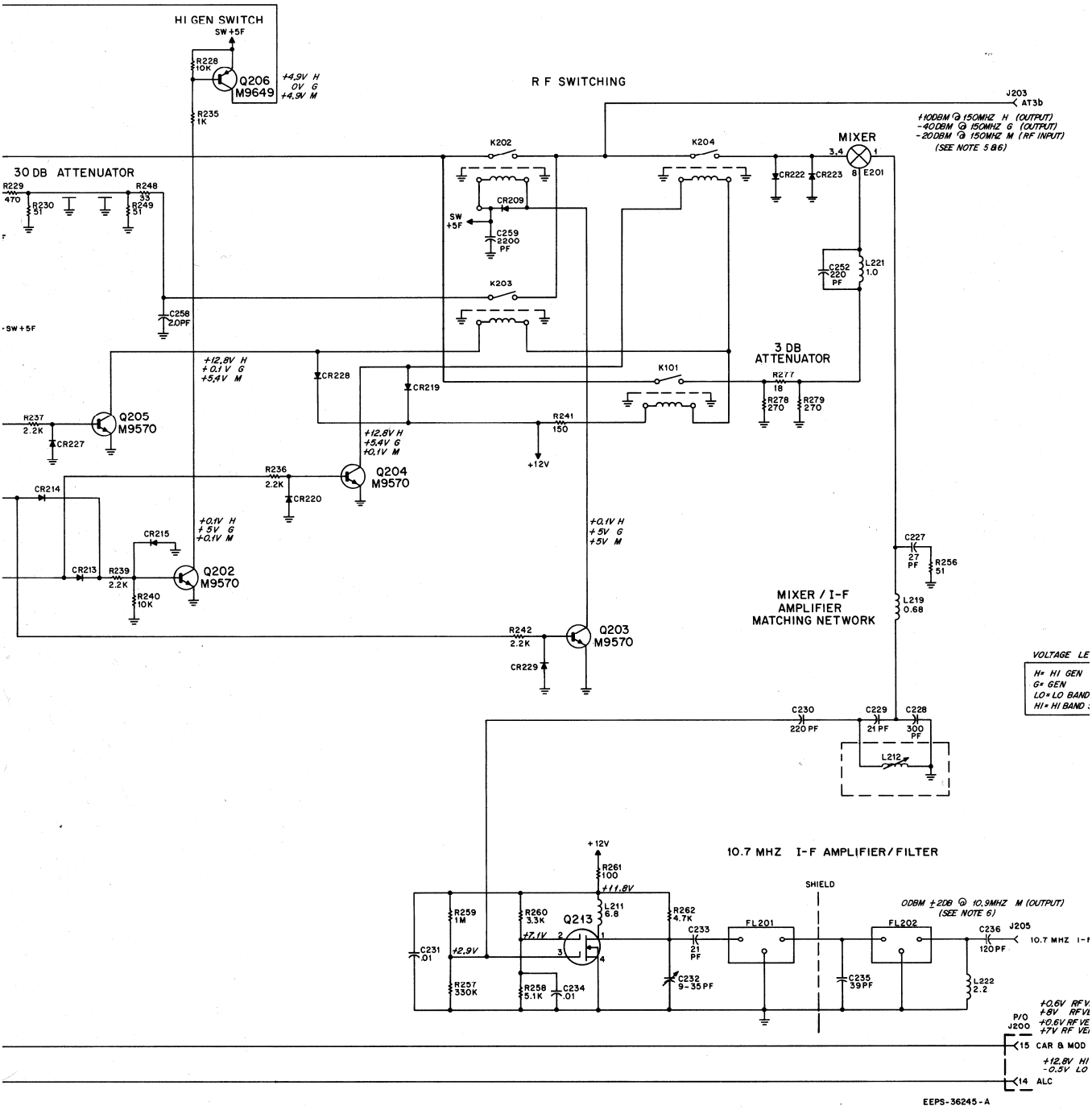

RF MODULE (A11)

WIDEBAND AMPLIFIER BOARD

MODEL RTL4093A

SCHEMATIC DIAGRAM, CIRCUIT BOARD DETAIL, AND PARTS LIST

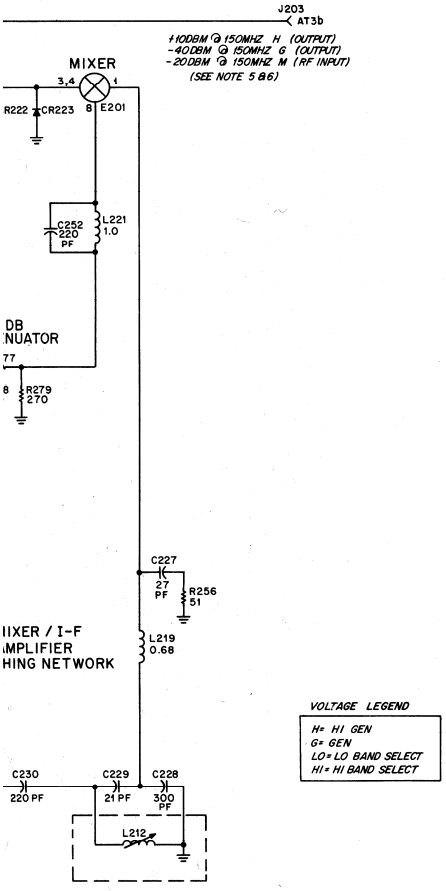

NOTES:

1. Unless otherwise indicated, all resistor values are in ohms; all capacitor values are in microfarads; and all inductors are in microhenries.
2. IC types are TTL & CMOS devices.
3. Types and connections for the integrated circuits used on this board are as follows:

Reference Designation	+5 V	+12 V	−12 V	GND	Unused Pins	Description
U201	Filt. +5 V; 2	—	—	3	—	RF Amp
U202	Filt. +5 V; 2	—	—	3	—	RF Amp
U203	Filt. SW +5 V; 2	—	—	3	—	RF Amp
U204	Filt. SW +5 V; 2	—	—	3	—	RF Amp
U205	Fil. SW +5 V; 2	—	—	3	—	RF Amp
U206	—	8	4	—	—	Dual Op-Amp
U207	—	7	—	—	1, 5, 8	Op-Amp
U208	—	14	—	—	—	Quad Analog Switch
U209	—	4	—	—	—	Quad Op-Amp (Comparator)
U210	—	7	—	4	1, 5, 8	Op-Amp

4. All dc voltages obtained with an rf synthesizer injection input (J4) being -10 dBm @ 150 MHz for HI GEN and GEN, and -10 dBM @ 110.7 MHz for MON. These voltages are typical values.
5. RF output levels in the AI GEN and GEN functions are obtained by setting the RF VERNIER control.
6. L.O injection input and rf input (@ J4 and J3, respectively) yield an I-f output (@ J5) as shown in the MON function.

I-F AMPLIFIER/FILTER

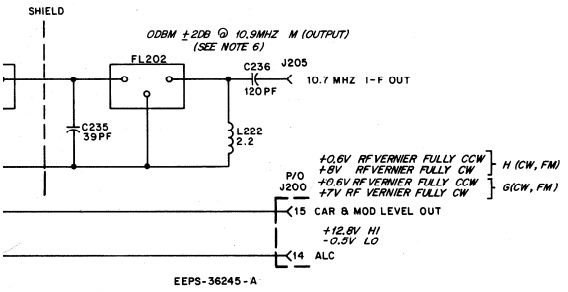

WIDEBAND AMPLIFIER BOARD

Motorola No. PEPS-36854-O
(Sheet 3 of 4)
8/12/83-PHI

RF MODULE (A11)

WIDEBAND AMPLIFIER BOARD

MODEL RTL4093A
SCHEMATIC DIAGRAM, CIRCUIT BOARD DETAIL, AND PARTS LIST

Motorola No. PEPS-36854-O
(Sheet 4 of 4)
8/12/83-PHI

parts list

RTL4093A Wideband Amplifier Board — PL-8462-O

REFERENCE SYMBOL	MOTOROLA PART NO.	DESCRIPTION
		capacitor, fixed pF; ± 10%; 50 V (chip): unless otherwise stated
C201	21-80376A21	390
C202	21-80376A26	2200
C203	21-80376A21	390
C204	21-80376A26	2200
C205	21-80376A24	680
C206, 207, 208	23-83441B15	1 uF ± 20%; 35 V
C209	21-80376A26	2200
C210 thru 213	23-83441B15	1 uF ± 20%; 35 V
C214	21-80376A26	2200
C215	21-80376A24	680
C216	21-80376A19	270
C217	21-80376A26	2200
C218	21-80376A24	680
C219	21-80376A26	2200
C222	21-80376A25	1000
C223	23-84762H14	0.47 uF ± 20%; 50 V
C224	21-82428B21	.01 uF + 10-30%; 100 V
C225	21-82372C03	0.1 uF + 80-20%; 25 V
C226		NOT USED
C227	21-84494B42	27 ± 5%; 500 V
C228	21-84494B15	300 ± 5%; 500 V
C229	21-84494B40	21 ± 5%; 500 V
C230	21-82187B08	220 ± 10%; 500 V
C231	21-82428B21	.01 uF + 10-30%; 100 V
C232	19-80370A35	variable; 9-35 pF
C233	21-84494B40	21 ± 5%; 500 V
C234	21-82428B21	.01 uF + 10-30%; 100 V
C235	21-84494B24	39 ± 5%; 500 V
C236	21-84494B06	120 ± 5%; 500 V
C237		NOT USED
C238	21-82372C03	0.1 uF + 80-20%; 25 V
C239	23-83441B15	1 uF ± 20%; 35 V
C240, 241	21-82428B21	.01 uF + 10-30%; 100 V
C242, 243	23-82372C03	0.1 uF + 80-20%; 25 V
C244	21-82428B47	.002 uF ± 5%; 200 V
C245	21-82872C03	0.1 uF + 80-20%; 25 V
C246, 247	23-84665F01	10 uF + 100-10%; 25 V
C248	21-80376A26	2200
C249, 250	23-84665F02	15 uF + 100-10%; 25 V
C251	23-83441B15	1 uF ± 20%; 35 V
C252	21-80376A14	220 pF ± 2%
C253	23-83441B15	1 uF ± 20%; 35 V
C254	21-80376A27	.015 uF ± 10%
C255	21-82428B47	.002 uF ± 5%; 200 V
C256	21-82428B21	.01 uF + 10-30%; 100 V
C257		NOT USED
C258	21-80376A02	2.7 ± .25 pF
C259, 260	21-80376A26	2200
C261	21-82372C03	0.1 uF + 80-20%; 100 V
C262	21-82428B47	.002 uF ± 5%; 200 V
		diode: (see note)
CR205	48-83654H01	silicon
CR206, 207, 208	48-80345A62	pin
CR209, 210, 211	48-83654H01	silicon
CR212		NOT USED
CR213 thru 216	48-83654H01	silicon
CR217	48-80394A86	hot carrier
CR218, 219, 220	48-83654H01	silicon
CR221	48-80394A86	hot carrier
CR222, 223	48-83654H01	silicon
CR224		NOT USED
CR225 thru 230	48-83654H01	silicon
CR231	48-80394A86	hot carrier
CR232	48-83654H01	silicon
		mixer:
E201	1-80377A98	assembly, double balanced mixer
		filter:
FL201, 202	91-80377A94	ceramic, 10.7 MHz
		relay:
K201 thru 204	80-80377A59	spst, coil res. 350 ohms; 5 V
		coil, rf:
L201 thru 207	24-83961B01	3 turns
L210	24-83961B01	3 turns
L211	24-80369A28	choke; 6.8 uH
L212	24-80377A97	variable
L213	24-80369A44	choke; 4700 uH
L214	24-83961B01	3 turns
L215, 216	24-80369A44	choke; 4700 uH
L217, 218	24-82549D41	choke; 100 uH
L219	24-80369A21	choke; 0.68 uH

DESCRIPTION
acitor, fixed pF; ± 10%; 50 V (chip):
ess otherwise stated
0
0
± 20%; 35 V
0
± 20%; 35 V
0
0
0
0
uF ± 20%; 50 V
uF + 10-30%; 100 V
uF + 80-20%; 25 V
T USED
± 5%; 500 V
± 5%; 500 V
± 5%; 500 V
± 10%; 500 V
uF + 10-30%; 100 V
able; 9-35 pF
± 5%; 500 V
uF + 10-30%; 100 V
± 5%; 500 V
± 5%; 500 V
T USED
uF + 80-20%; 25 V
± 20%; 35 V
uF + 10-30%; 100 V
uF + 80-20%; 25 V
uF ± 5%; 200 V
uF + 80-20%; 25 V
F + 100-10%; 25 V
)
F + 100-10%; 25 V
± 20%; 35 V
pF ± 2%
± 20%; 35 V
uF ± 10%
uF ± 5%; 200 V
uF + 10-30%; 100 V
USED
± .25 pF
)
uF + 80-20%; 100 V
uF ± 5%; 200 V
le: (see note)
on
on
USED
on
carrier
on
carrier
on
USED
on
carrier
on
r:
mbly, double balanced mixer
r:
mic, 10.7 MHz
r:
, coil res. 350 ohms; 5 V
rf:
ns
ns
e; 6.8 uH
able
e; 4700 uH
ns
e; 4700 uH
e; 100 uH
e; 0.68 uH

REFERENCE SYMBOL	MOTOROLA PART NO.	DESCRIPTION
L220	24-83961B01	3 turns
L221	24-80369A22	choke; 1 uH
L222	24-80369A32	choke; 2.2 uH
L223	24-83961B01	3 turns
L224	76-83960B01	choke, bead; 3 turns
		transistor: (see note)
Q201	48-869571	PNP; type M9571
Q202 thru 205	48-869570	NPN; type M9570
Q206	48-869649	PNP; M9649
Q207	48-869570	NPN; type M9570
Q213	48-80345A42	MOS field-effect
		resistor, fixed; ± 5%; 1/4 W: unless otherwise stated
R201	6-124A01	10
R202	6-124A55	1.8k
R203	6-124A03	12
R204	6-124A25	100
R205	6-124A73	10k
R206	6-124A39	390
R207, 208	6-124A97	100k
R209	6-124A73	10k
R210	6-124A43	560
R211	6-124B02	150k
R212	6-124A61	3.3k
R213	6-185A35	270; 1/8 W
R214	6-124B22	1 meg
R215	6-124A72	9.1k
R216, 217	6-124B06	220k
R218	6-124A89	47k
R219	6-124A97	100k
R220	6-10621C67	5.6k ± 1%; 1/8 W
R221	6-10621C91	10k ± 1%; 1/8 W
R222	6-124A25	100
R223	6-124A09	22
R224, 225	6-124A49	1k
R226	6-124A67	5.6k
R227	6-124A97	100k
R228	6-124A73	10k
R229	6-185A41	470; 1/8 W
R230	6-185A18	51; 1/8 W
R231	6-124A09	22
R232, 233	6-124B67	8.2
R234	6-10621C87	9.09k ± 1%; 1/8 W
R235	6-124A49	1k
R236, 237	6-124A57	2.2k
R238	6-124A73	10k
R239	6-124A57	2.2k
R240	6-124A73	10k
R241	6-124A29	150
R242	6-185A57	2.2k; 1/8 W
R243, 244		NOT USED
R245	6-185A57	2.2k; 1/8 W
R246	6-124A73	10k
R247	6-125A49	1k; 1/2 W
R248	6-11024A13	33; 1/8 W (chip)
R249	6-185A18	51; 1/8 W
R250	6-10621E53	464k ± 1%; 1/8 W
R251	6-10621D49	39.2k ± 1%; 1/8 W
R252	18-83452F16	variable; 20k
R253	6-124A97	100k
R254, 255		NOT USED
R256	6-124A18	51
R257	6-124B10	330k
R258	6-124A66	5.1k
R259	6-124B22	1 meg
R260	6-124A61	3.3k
R261	6-185A25	100; 1/8 W
R262, 263	6-124A65	4.7k
R264		NOT USED
R265	6-124A25	100
R266	6-124A67	5.6k
R267		NOT USED
R268	6-124A89	47k
R269	6-124B16	560k
R270, 271		NOT USED
R272	6-10621B78	681 ± 1%; 1/8 W
R273	6-10621C63	5.11k ± 1%; 1/8 W
R274	6-124A45	680
R275	6-124A65	4.7k
R276	18-83452F10	variable; 1k
R277	6-185A07	18; 1/8 W
R278, 279	6-185A35	270; 1/8 W
R280	6-124A37	330
R281	6-124A73	10k
R282	6-124A97	100k
R283	6-10621D33	26.7k ± 1%; 1/8 W
R284	6-185A69	6.8k; 1/8 W
		integrated circuit: (see note)
U201, 202, 203	51-80345A34	rf amplifier
U204, 205	51-80345A35	rf amplifier
U206	51-80365A07	dual operational amplifier
U207	51-80365A08	operational amplifier
U208	51-82884L48	quad analog switch

REFERENCE SYMBOL	MOTOROLA PART NO.	DESCRIPTION
U209	51-83629M08	quad operational amplifier
U210	51-83629M07	operational amplifier
		voltage regulator: (see note)
VR201	48-80378A46	Zener type; 4.3 V
VR202	48-82256C23	Zener type; 6.8 V
VR203, 204	48-83624E52	Zener type; 3.3 V
VR205	48-82256C23	Zener type; 6.8 V
		mechanical parts
	26-80378A77	SHIELD
	26-80395A49	SHIELD
J203, 204	9-5856A01	SOCKET, spring miniature; 2 used
J200	9-80377A65	RECEPTACLE, pin; 2 used

note: For optimum performance, diodes, transistors, and integrated c be ordered by Motorola part numbers.

ENCE BOL	MOTOROLA PART NO.	DESCRIPTION
	24-83961B01	3 turns
	24-80369A22	choke; 1 uH
	24-80369A32	choke; 2.2 uH
	24-83961B01	3 turns
	76-83960B01	choke, bead; 3 turns
		transistor: (see note)
	48-869571	PNP; type M9571
205	48-869570	NPN; type M9570
	48-869649	PNP; M9649
	48-869570	NPN; type M9570
	48-80345A42	MOS field-effect
		resistor, fixed; ± 5%; 1/4 W: unless otherwise stated
	6-124A01	10
	6-124A55	1.8k
	6-124A03	12
	6-124A25	100
	6-124A73	10k
	6-124A39	390
	6-124A97	100k
	6-124A73	10k
	6-124A43	560
	6-124B02	150k
	6-124A61	3.3k
	6-185A35	270; 1/8 W
	6-124B22	1 meg
	6-124A72	9.1k
	6-124B06	220k
	6-124A89	47k
	6-124A97	100k
	6-10621C67	5.6k ± 1%; 1/8 W
	6-10621C91	10k ± 1%; 1/8 W
	6-124A25	100
	6-124A09	22
	6-124A49	1k
	6-124A67	5.6k
	6-124A97	100k
	6-124A73	10k
	6-185A41	470; 1/8 W
	6-185A18	51; 1/8 W
	6-124A09	22
	6-124B67	8.2
	6-10621C87	9.09k ± 1%; 1/8 W
	6-124A49	1k
	6-124A57	2.2k
	6-124A73	10k
	6-124A57	2.2k
	6-124A73	10k
	6-124A29	150
	6-185A57	2.2k; 1/8 W
		NOT USED
	6-185A57	2.2k; 1/8 W
	6-124A73	10k
	6-125A49	1k; 1/2 W
	6-11024A13	33; 1/8 W (chip)
	6-185A18	51; 1/8 W
	6-10621E53	464k ± 1%; 1/8 W
	6-10621D49	39.2k ± 1%; 1/8 W
	18-83452F16	variable; 20k
	6-124A97	100k
		NOT USED
	6-124A18	51
	6-124B10	330k
	6-124A66	5.1k
	6-124B22	1 meg
	6-124A61	3.3k
	6-185A25	100; 1/8 W
	6-124A65	4.7k
		NOT USED
	6-124A25	100
	6-124A67	5.6k
		NOT USED
	6-124A89	47k
	6-124B16	560k
		NOT USED
	6-10621B78	681 ± 1%; 1/8 W
	6-10621C63	5.11k ± 1%; 1/8 W
	6-124A45	680
	6-124A65	4.7k
	18-83452F10	variable; 1k
	6-185A07	18; 1/8 W
	6-185A35	270; 1/8 W
	6-124A37	330
	6-124A73	10k
	6-124A97	100k
	6-10621D33	26.7k ± 1%; 1/8 W
	6-185A69	6.8k; 1/8 W
		integrated circuit: (see note)
203	51-80345A34	rf amplifier
	51-80345A35	rf amplifier
	51-80365A07	dual operational amplifier
	51-80365A08	operational amplifier
	51-82884L48	quad analog switch

REFERENCE SYMBOL	MOTOROLA PART NO.	DESCRIPTION
U209	51-83629M08	quad operational amplifier
U210	51-83629M07	operational amplifier
		voltage regulator: (see note)
VR201	48-80378A46	Zener type; 4.3 V
VR202	48-82256C23	Zener type; 6.8 V
VR203, 204	48-83624E52	Zener type; 3.3 V
VR205	48-82256C23	Zener type; 6.8 V
		mechanical parts
	26-80378A77	SHIELD
	26-80395A49	SHIELD
J203, 204	9-5856A01	SOCKET, spring miniature; 2 used
J200	9-80377A65	RECEPTACLE, pin; 2 used

note: For optimum performance, diodes, transistors, and integrated circuits must be ordered by Motorola part numbers.

RF MODULE (A11)

RF WATTMETER BOARD

MODEL RTL4094A
SCHEMATIC DIAGRAM, CIRCUIT BOARD DETAIL,
AND PARTS LIST

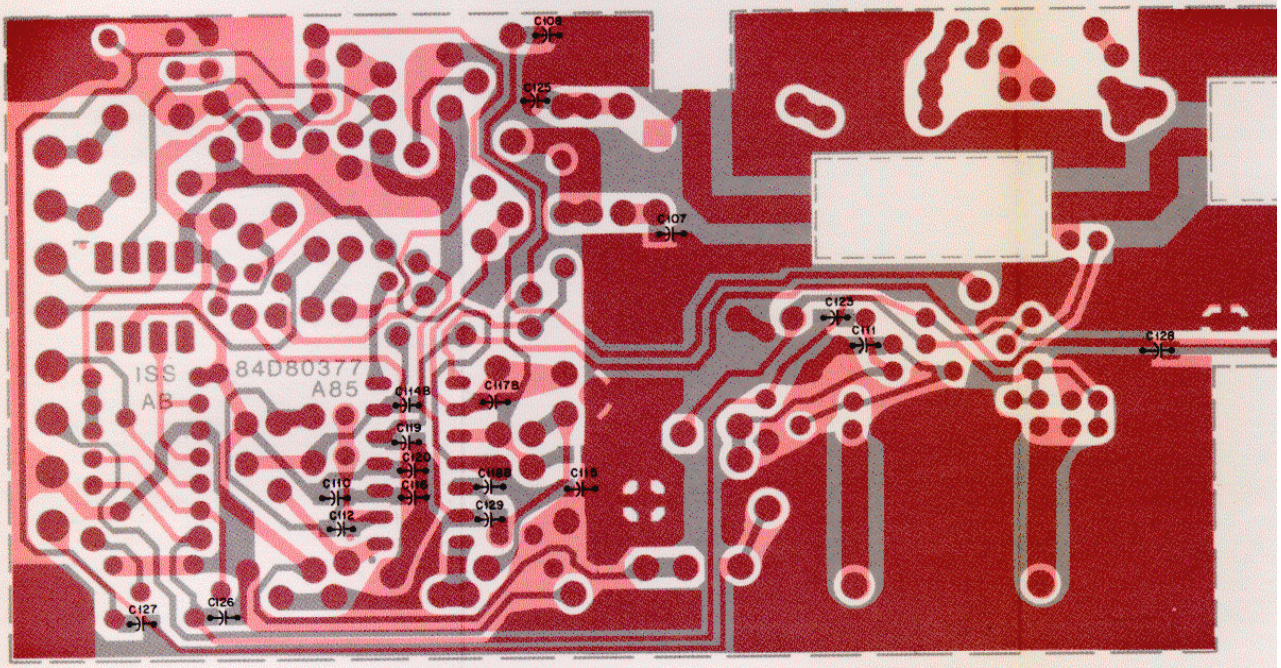

SOLDER SIDE ● BD-DEPS-36308-O (REVERSED)
COMPONENT SIDE ● BD-DEPS-36309-O (REVERSED)
OL-DEPS-36310-A

SHOWN FROM SOLDER SIDE
(COMPONENTS ARE CHIP CAPACITORS)

Motorola No. ***PEPS-36853-O***
(Sheet 1 of 2)
8/12/83-PHI

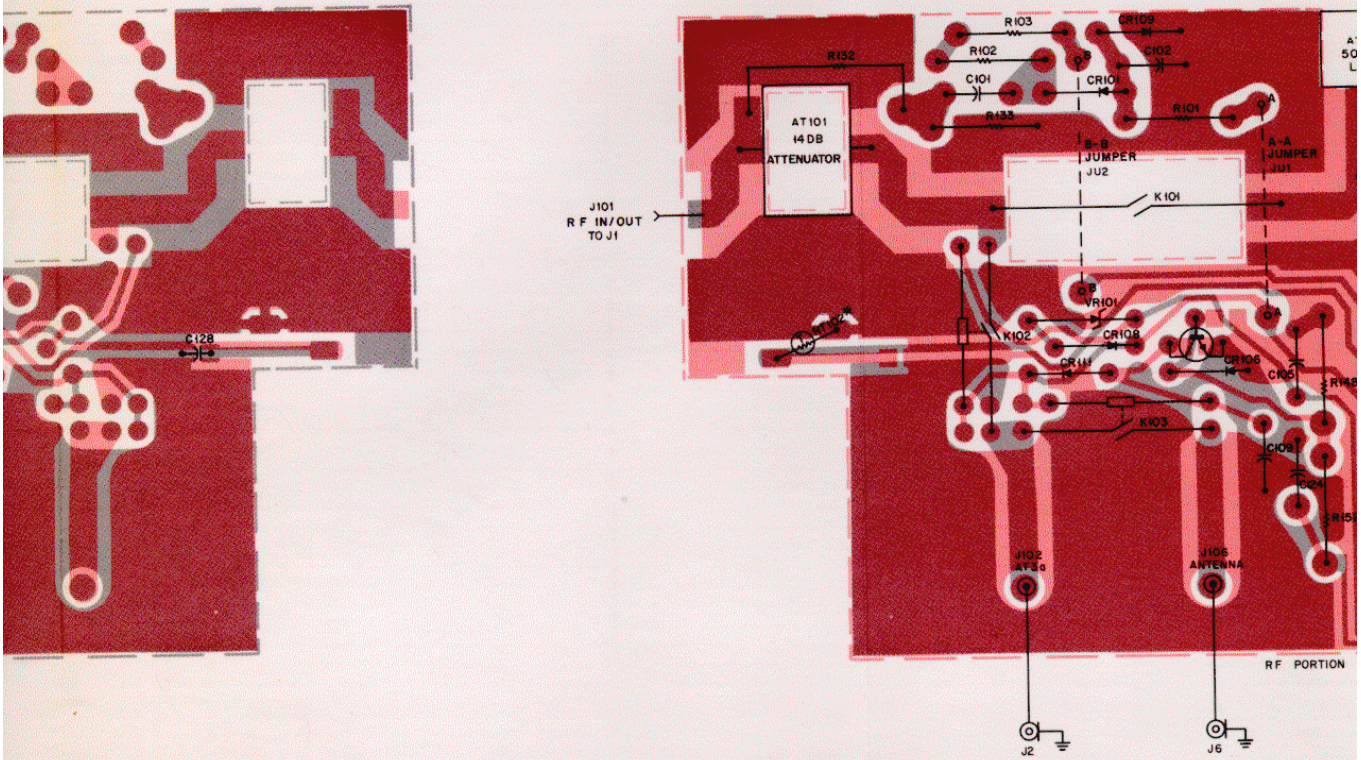
C128
R132
AT101
14 DB
ATTENUATOR
J101
R F IN/OUT
TO J1
R103
R102
C101
R133
CR109
C102
CR101
R101
B-B
JUMPER
JU2
A-A
JUMPER
JU1
K101
VR101
K102
CR108
CR111
CR106
C105
K103
C109
C124
J102
J106
ANTENNA
RF PORTION
J2
J6

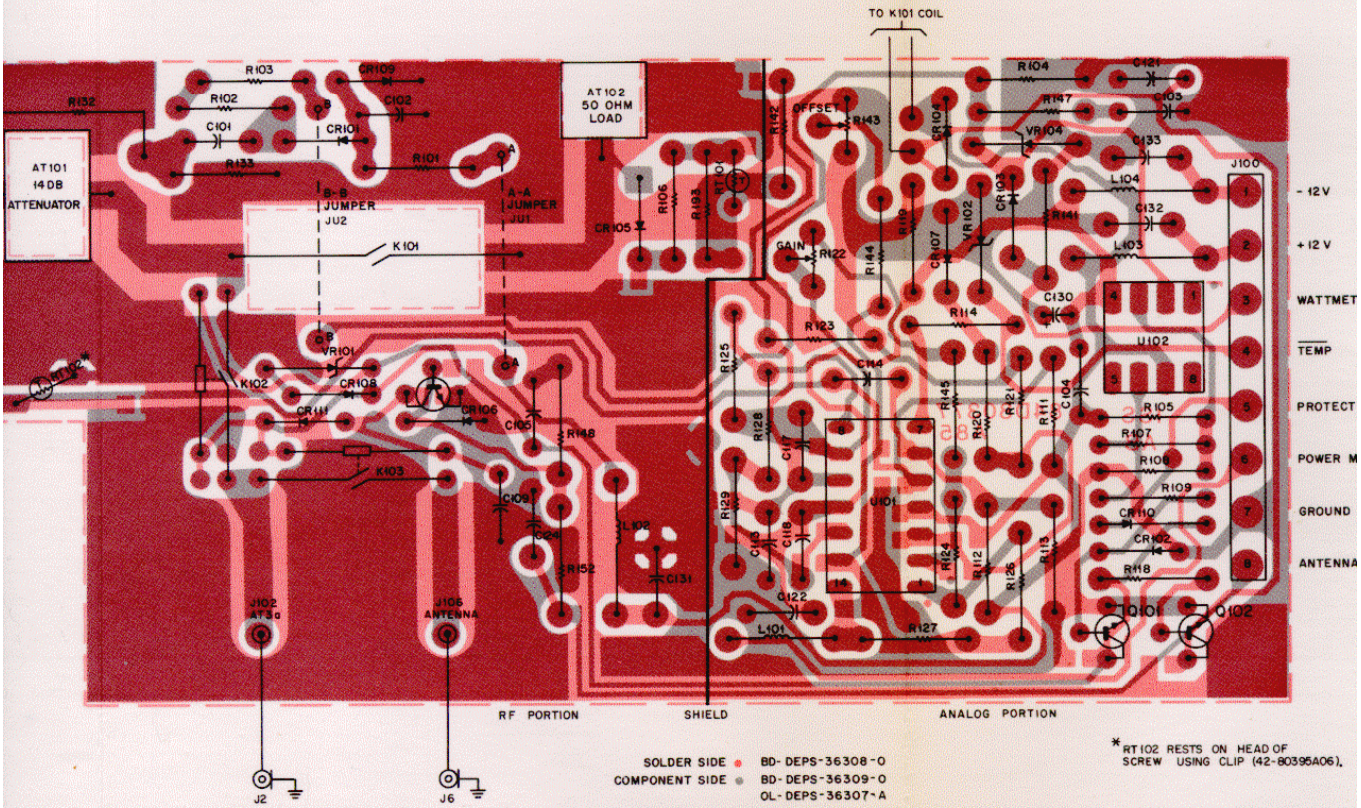

SHOWN FROM COMPONENT SIDE

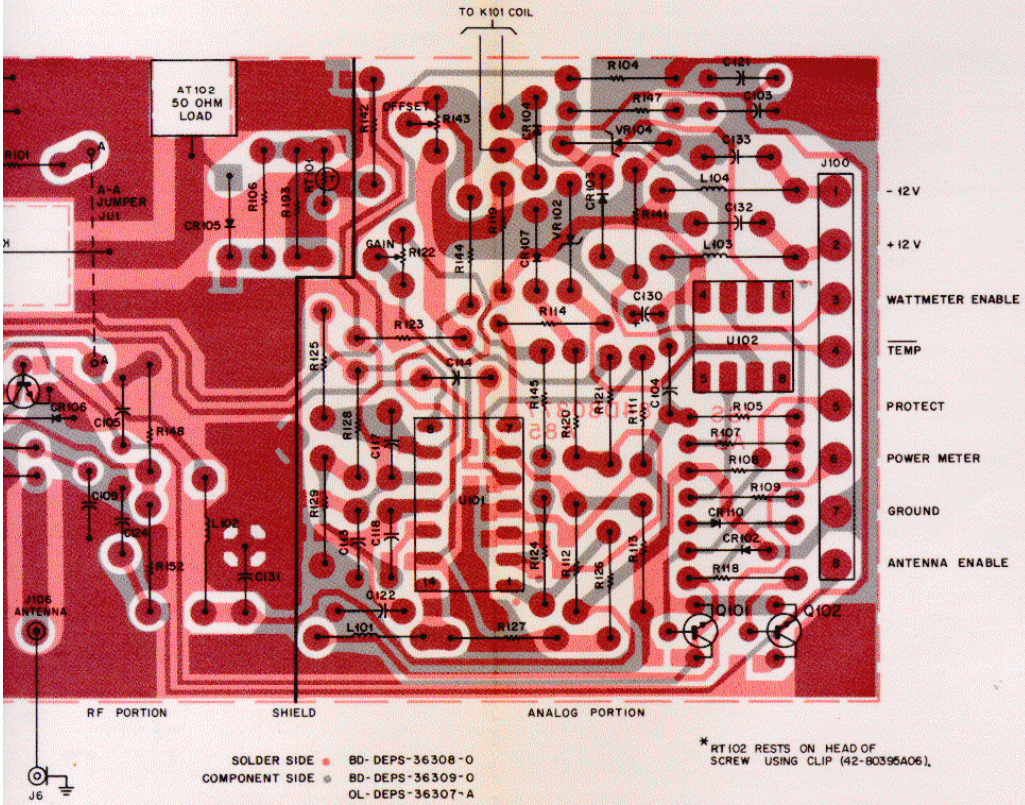

SOLDER SIDE ● BD-DEPS-36308-0
COMPONENT SIDE ● BD-DEPS-36309-0
OL-DEPS-36307-A

*RT102 RESTS ON HEAD OF SCREW USING CLIP (42-80395A06).

SHOWN FROM COMPONENT SIDE

parts list

RTL4094A RF Wattmeter Board — PL-8463-O

REFERENCE SYMBOL	MOTOROLA PART NO.	DESCRIPTION
		attenuator:
AT101	17-80377A95	14 dB
AT102	17-80377A96	50 ohm termination
		capacitor, fixed pF; ± 5%; 50 V (chip): unless otherwise stated
C101, 102	21-83596E32	1100; 200 V
C103, 104, 105	21-832501	.01 uF + 60-40%; 500 V
C106		NOT USED
C107	21-80376A28	7.5
C108	21-80376A10	22
C109	21-832501	.01 uF + 60-40%; 500 V
C110, 111, 112	21-80376A10	22
C113, 114A	21-82428B21	.01 uF + 10-30%; 100 V
C114B, 115	21-80376A06	10
C116	21-80376A10	22
C117A	21-82428B21	.01 uF + 10-30%; 100 V
C117B	21-80376A06	10
C118A	21-82428B21	.01 uF + 10-30%; 100 V
C118B	21-80376A06	10
C119, 120	21-80376A10	22
C121	21-832501	.01 uF + 60-40%; 500 V
C122A	21-82428B21	.01 uF + 10-30%; 100 V
C123	21-80376A06	10
C124	21-832501	.01 uF + 60-40%; 500 V
C125	21-80376A27	.015 uF ± 10%
C126, 127	21-80376A10	22
C128	21-80376A27	.015 uF ± 10%
C129	21-80376A06	10
C130	23-84665F01	10 uF + 100-10%; 25 V
C131, 132, 133	21-82372C07	.05 uF + 80-20%; 25 V
		diode: (see note)
CR101	48-80345A64	hot carrier
CR102, 103, 104	48-83654H01	silicon
CR105	48-80345A64	hot carrier
CR106	48-83654H01	silicon
CR107	48-80345A64	hot carrier
CR108	48-83654H01	silicon
CR109	48-80345A64	hot carrier
CR110	48-84616A01	hot carrier
CR111	48-83654H01	silicon
		relay:
K101		includes:
	24-80369A45	solenoid
	26-80377A63	shield, reed
	40-84200B02	switch, reed, spst
K102, 103	80-80377A60	1 form A res. 1500 ohms
		coil, rf:
L101	24-80369A25	choke; 0.22 uH
L102, 103, 104	24-82549D41	choke; 100 uH
		transistor: (see note)
Q101	48-869787	NPN; type M9787
Q102, 103	48-869570	NPN; type M9570
		resistor, fixed; ± 5%; 1/4 W: unless otherwised stated
R101	6-124A81	22k
R102, 103	6-124A66	5.1k
R104	6-124B22	1 meg
R105	6-124A85	33k
R106	6-124A23	82
R107	6-124B06	220k
R108	6-124A49	1k
R109	6-124A53	1.5k
R110		NOT USED
R111	6-124A73	10k
R112, 113	6-124A89	47k
R114	6-124A75	12k
R118	6-124A73	10k
R119	6-124A75	12k
R120	6-124A87	39k
R121	6-124A71	8.2k
R122	18-84352F12	variable; 5k
R123	6-83175C90	8.06k ± 1%; 1/8 W
R124, 125	6-10621C19	1.78k ± 1%; 1/8 W
R126 thru 129	6-83175C03	10k ± 1%; 1/8 W
R132	6-125A83	27k; 1/2 W
R133	6-124A51	1.2k
R141	6-124A73	10k
R142	6-83175C51	37.4k ± 1%; 1/8 W
R143	18-83452F10	variable; 1k
R144	6-124A89	47k
R145	6-124A53	1.5k
R147	6-124A49	1k
R148	6-124A73	10k
R152	6-124A49	1k
R153	6-83175C88	6.98k ± 1%; 1/8 W
		thermistor:
RT101, 102	6-83600K05	100k @ 25 °C

REFERENCE SYMBOL	MOTOROLA PART NO.	DESCRIPTION
		integrated circuit: (see note)
U101	51-83629M08	quad operational amplifier
U102	51-83629M07	operational amplifier
		voltage regulator: (see note)
VR101	48-80345A84	Zener type; 68 V
VR102	48-82256C15	Zener type; 5.1 V
VR103		NOT USED
VR104	48-82256C15	Zener type; 5.1 V
		mechanical parts
J102, 106	9-05856A01	SOCKET, spring miniature; 2 used
J100	9-80377A65	RECEPTACLE, pin
	26-80378A76	SHIELD
	26-80377A63	SHIELD, reed

note: For optimum performance, diodes, transistors, and integrated circuits must be ordered by Motorola part numbers.

RF

ANTENNA

WAT

?TION

note)

fier

note)

ure; 2 used

tegrated circuits must

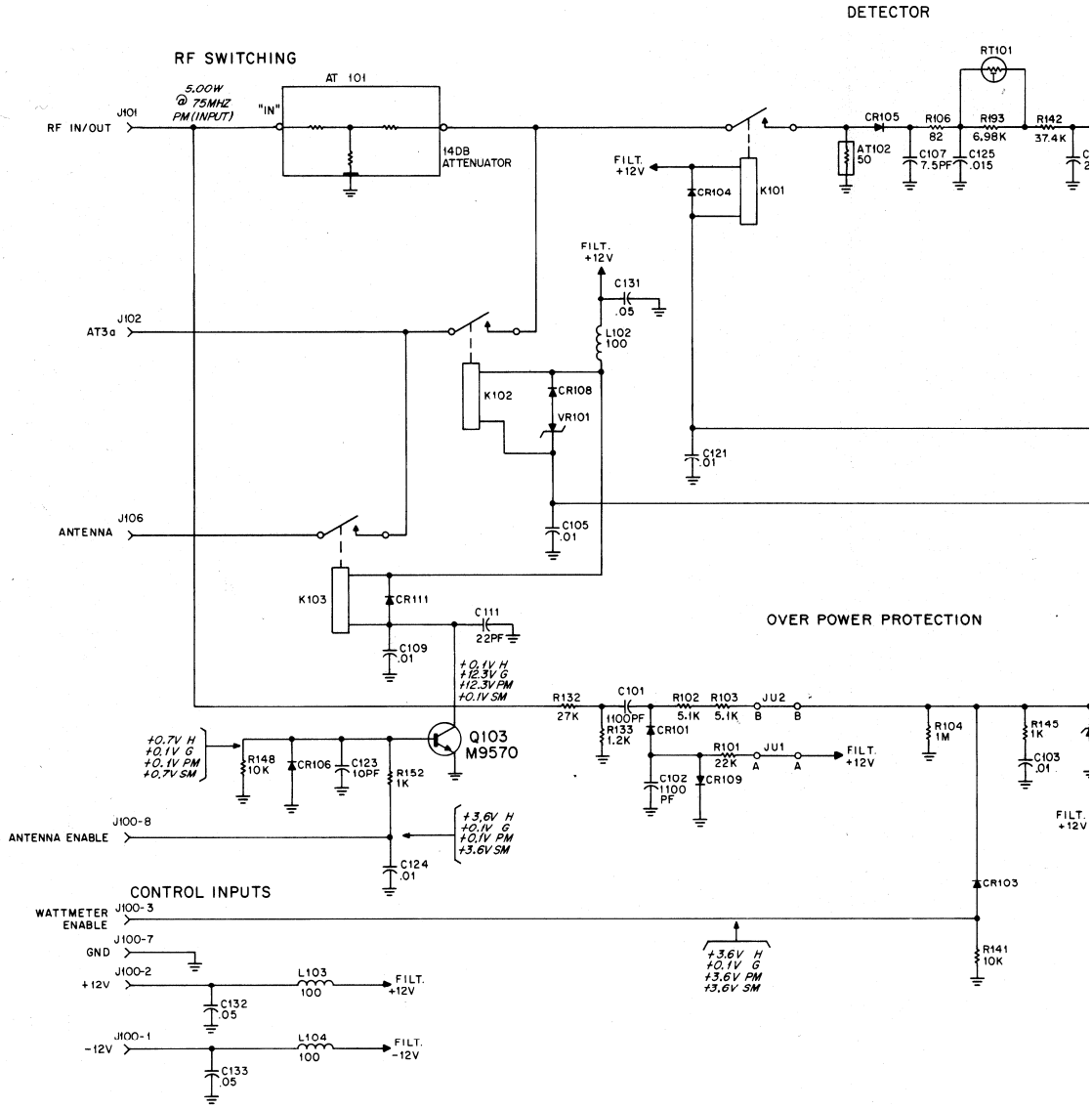

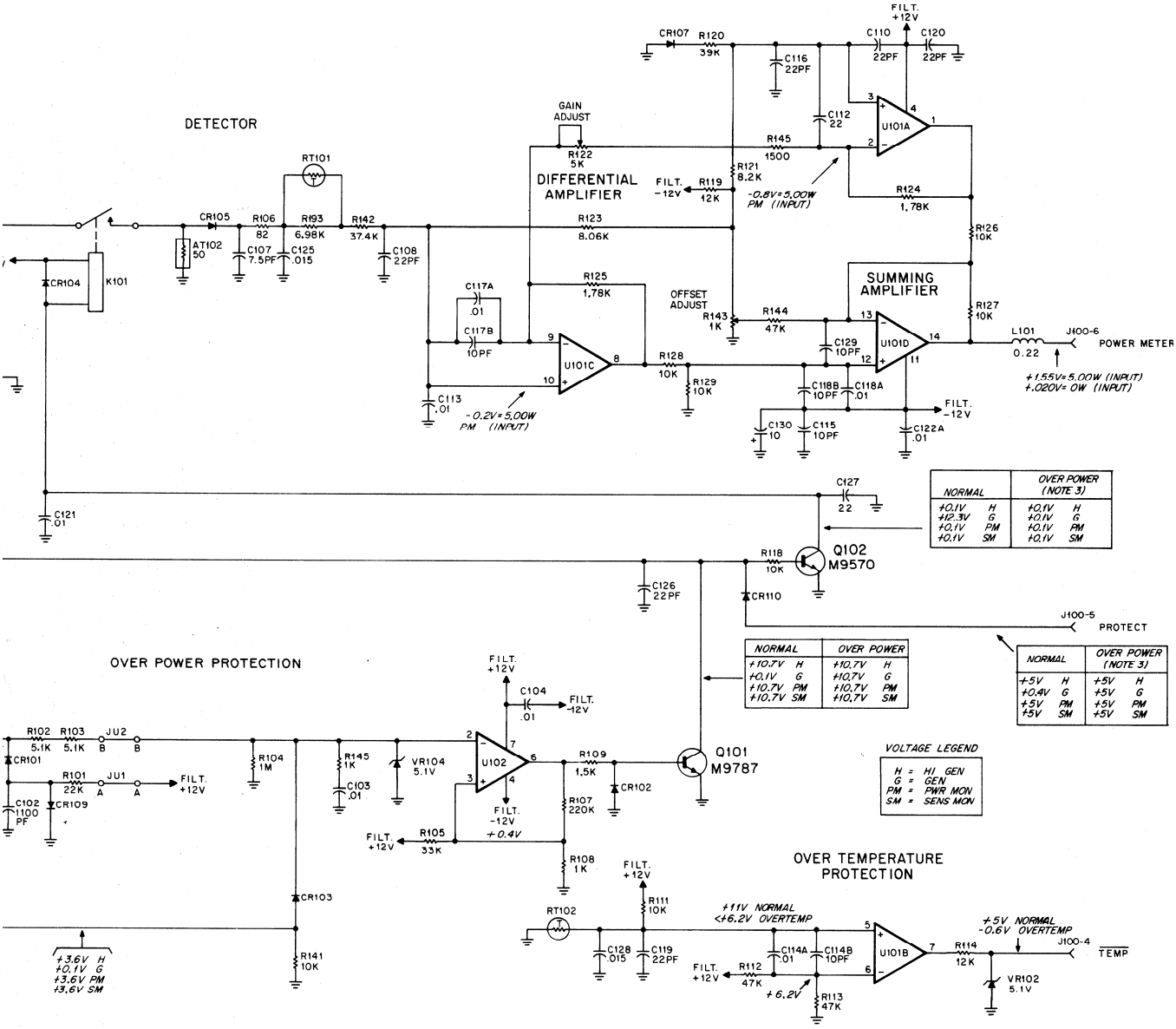
DETECTOR
DIFFERENTIAL AMPLIFIER
SUMMING AMPLIFIER
OVER POWER PROTECTION
OVER TEMPERATURE PROTECTION
GAIN ADJUST
OFFSET ADJUST
FILT. +12V
FILT. -12V
POWER METER
PROTECT
TEMP
-0.8V=5.00W PM (INPUT)
-0.2V=5.00W PM (INPUT)
+1.55V=5.00W (INPUT)
+.020V= 0W (INPUT)
+11V NORMAL
<+6.2V OVERTEMP
+5V NORMAL
-0.6V OVERTEMP
+3.6V H
+0.1V G
+3.6V PM
+3.6V SM
VOLTAGE LEGEND
H = HI GEN
G = GEN
PM = PWR MON
SM = SENS MON
DEPS-36243-A

RF MODULE (A11)

RF WATTMETER BOARD

MODEL RTL4094A

SCHEMATIC DIAGRAM, CIRCUIT BOARD DETAIL, AND PARTS LIST

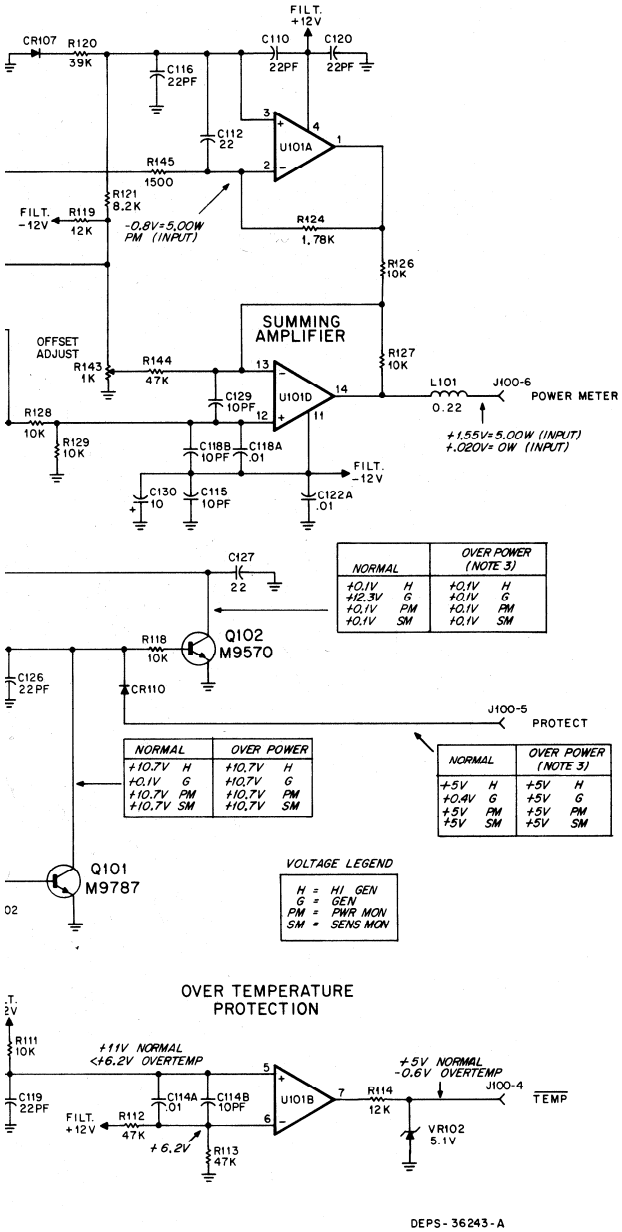

NORMAL		OVER POWER (NOTE 3)	
+0.1V	H	+0.1V	H
+12.3V	G	+0.1V	G
+0.1V	PM	+0.1V	PM
+0.1V	SM	+0.1V	SM

NORMAL		OVER POWER	
+10.7V	H	+10.7V	H
+0.1V	G	+10.7V	G
+10.7V	PM	+10.7V	PM
+10.7V	SM	+10.7V	SM

NORMAL		OVER POWER (NOTE 3)	
+5V	H	+5V	H
+0.4V	G	+5V	G
+5V	PM	+5V	PM
+5V	SM	+5V	SM

NOTES:

1. Unless otherwise indicated, all resistor values are in ohms; all capacitor values are in microfarads; and all inductor values are in microhenries.
2. IC types are TTL & CMOS devices.
3. 1.25 W TRIP-POINT @ J101 for overpower condition.
4. Types and connections for the integrated circuits used on this board are as follows:

Reference Designation	Mfgr's Description	+12 V	−12 V	Gnd	Unused Pins
U101	Quad Op Amp	4	11	—	—
U102	Op Amp	7	4	—	1, 5, 8

RF WATTMETER BOARD

*Motorola No. **PEPS-36853-O***
(Sheet 2 of 2)
8/12/83-PHI

RF MODULE (A11)

RF INTERCONNECT BOARD

MODEL RTL4095A
SCHEMATIC DIAGRAM, CIRCUIT BOARD DETAIL,
AND PARTS LIST

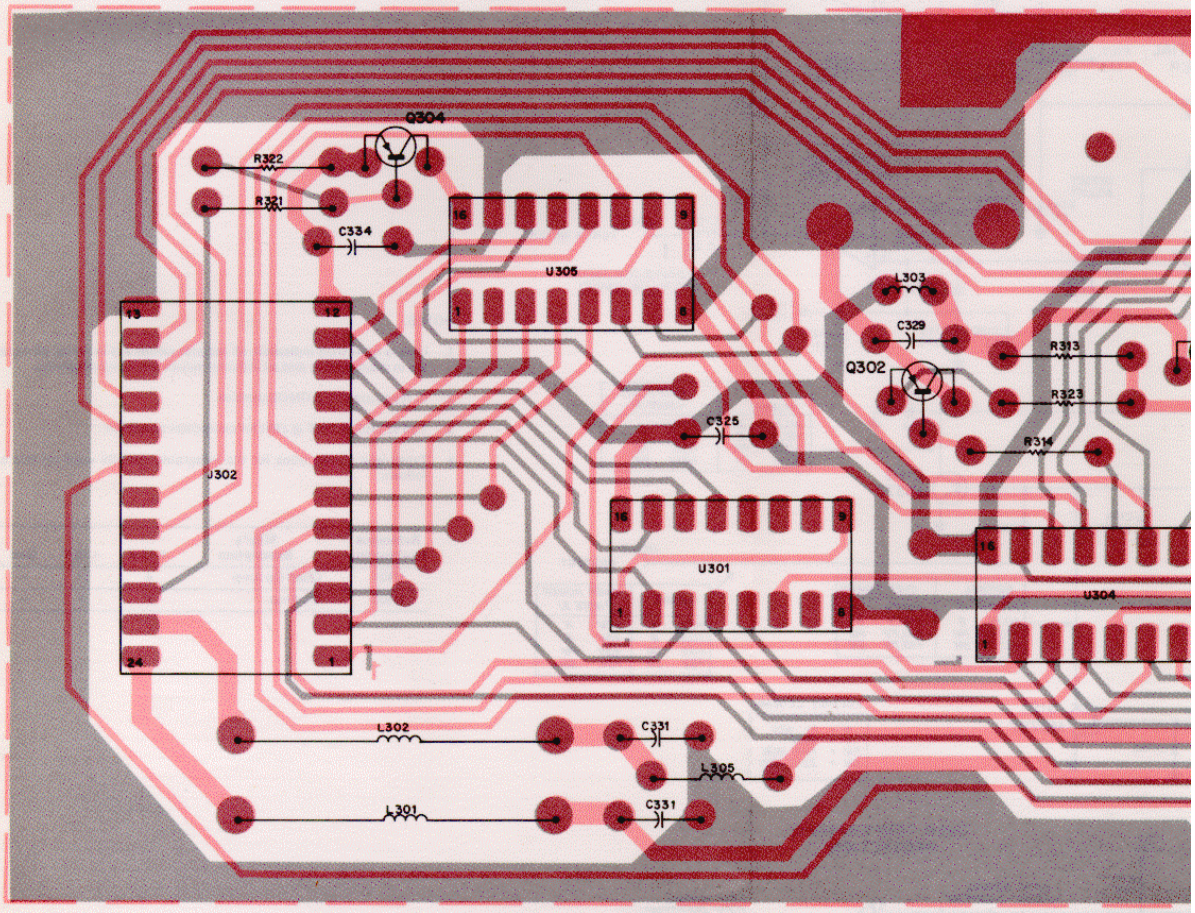

Motorola No. ***PEPS-36852-O***
(Sheet 1 of 2)
8/12/83-PHI

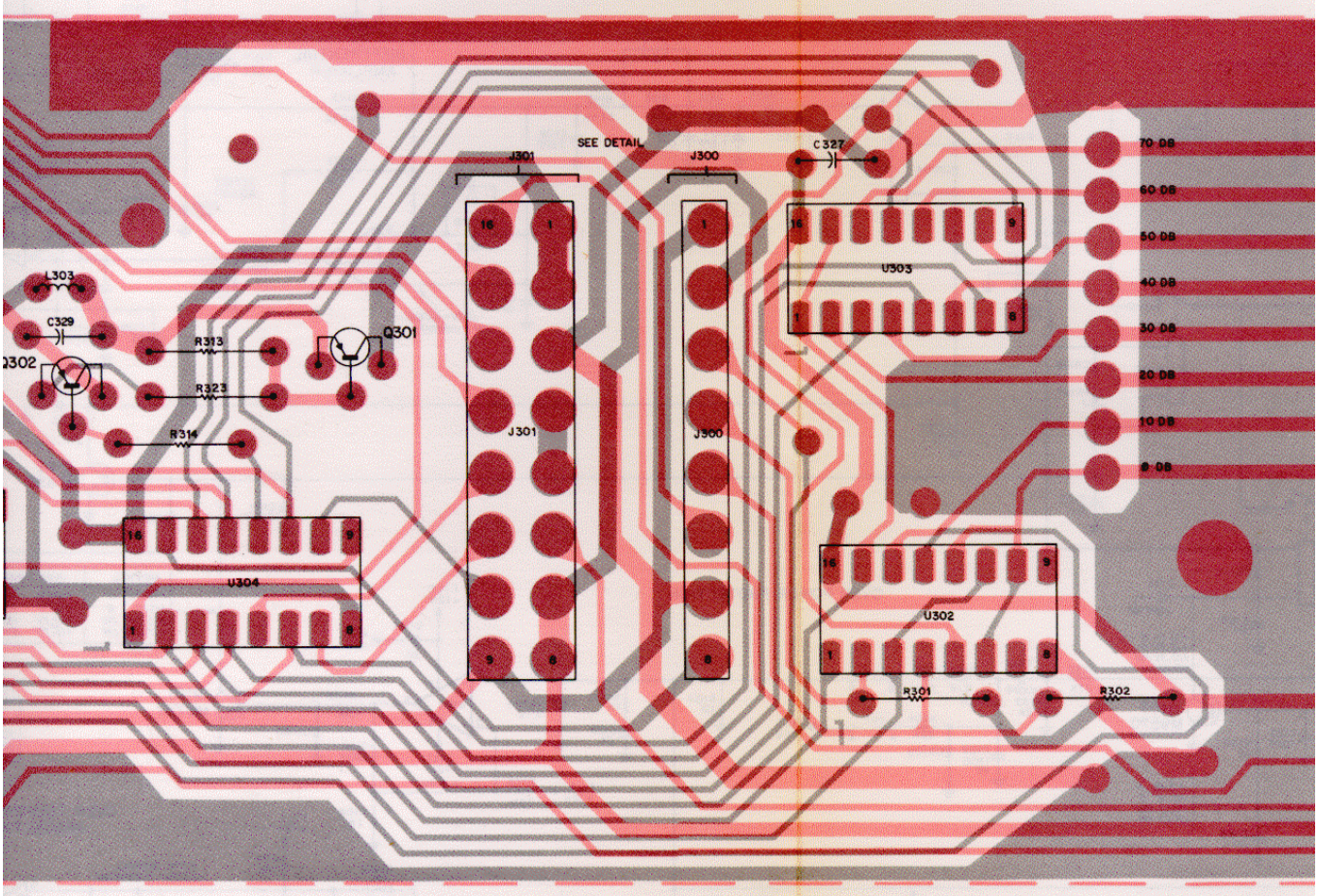

SHOWN FROM COMPONENT SIDE

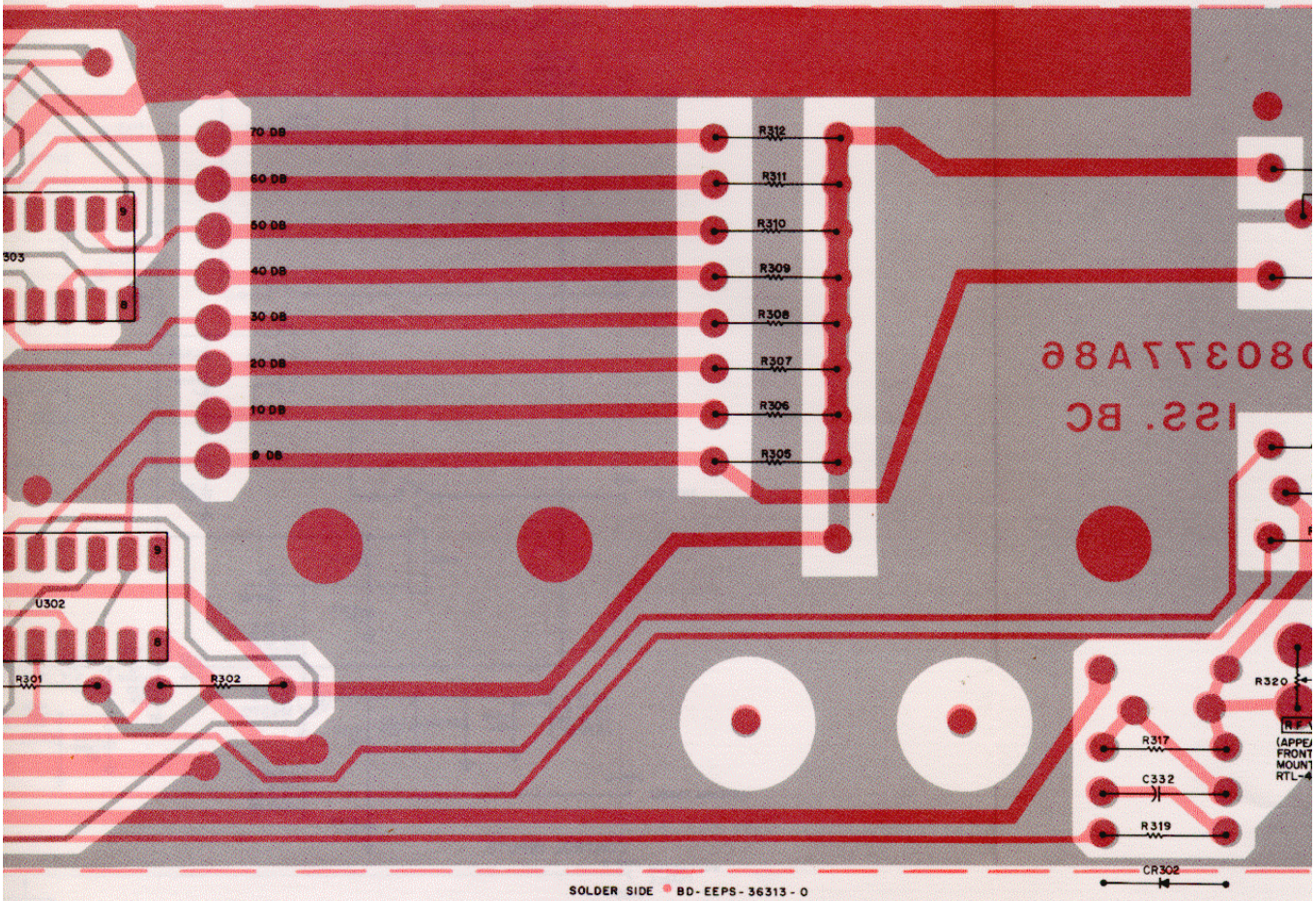

SOLDER SIDE BD-EEPS-36313-0
COMPONENT SIDE BD-EEPS-36314-0
OVERLAY OL-EEPS-36312-B

SIDE

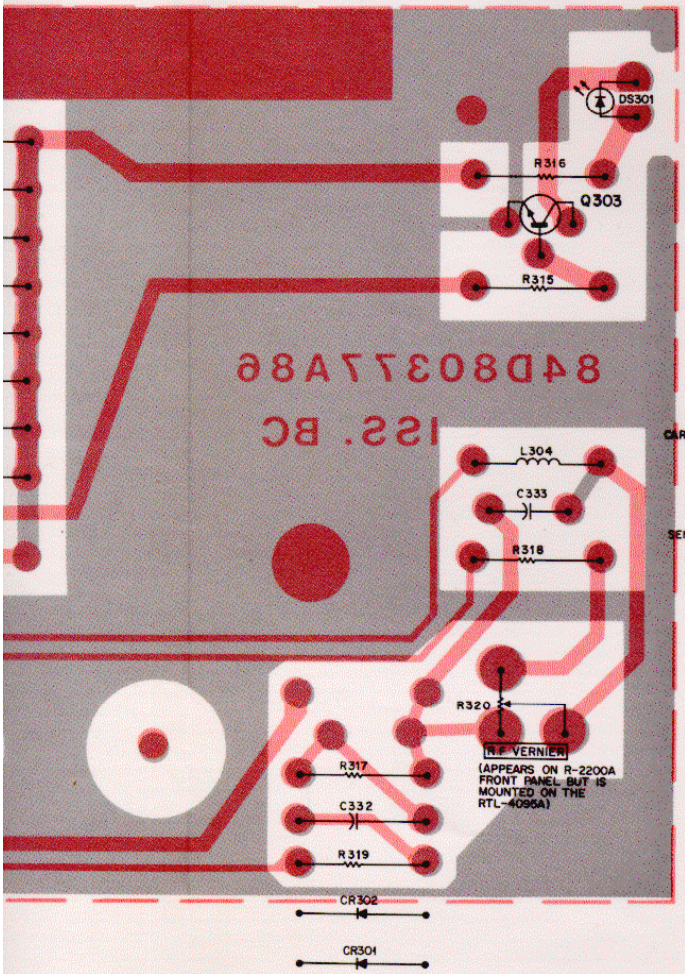

J302 DETAIL

GND	13	12	+5V
ALC	14	11	A3
LO/$\overline{\text{HI}}$ BAND	15	10	A2
CAR & MOD LEVEL OUT	16	9	$\overline{\text{STROBE 1}}$
POWER METER	17	8	AØ
AM MOD AUDIO	18	7	A1
$\overline{\text{P.O.R.}}$	19	6	D4
D5	20	5	D3
D6	21	4	D2
$\overline{\text{STROBE 3}}$	22	3	D1
−12V	23	2	DØ
+12V	24	1	D7

J301 DETAIL

D.C. REF & AUD IN	16	1	SW + 5V
CAR & MOD LEVEL OUT	15	2	SW + 5V
ALC	14	3	GND
LO/$\overline{\text{HI}}$ BAND	13	4	GND
GEN	12	5	GND
HI GEN	11	6	GND
SENSITIVE MONITOR	10	7	+12V
−12V	9	8	+12V

J300 DETAIL

1	−12V
2	+12V
3	WATTMETTER ENABLE
4	$\overline{\text{TEMP}}$
5	PROTECT
6	POWER METER
7	GND
8	ANTENNA ENABLE

parts list

RTL4095A RF Interconnect Board — PL-8461-O

REFERENCE SYMBOL	MOTOROLA PART NO.	DESCRIPTION
		capacitor, fixed uF; + 60-40%; 500 V: unless otherwise stated
C325 thru 331	21-832501	.01
C332, 333	21-82428B47	.002 uF ± 5%; 200 V
C334	21-832501	.01
		diode: (see note)
CR301, 302	48-83654H01	silicon
		light emitting diode: (see note)
DS301	48-80329A53	red
		connector, receptacle:
J302	9-84881F01	female; 24 contact
J303	9-82604F02	female; 16 contact
		coil, rf:
L301	24-82549D07	choke; 56 uH
L302	24-80348A83	choke; 470 uH
L303	25-83127G01	choke filter
L304	24-80369A25	choke; 0.22 uH
L305	24-80369A23	choke; 0.15 uH
		transistor: (see note)
Q301	48-869649	PNP; type M9649
Q302	48-869571	PNP; type M9571
Q303	48-869570	NPN; type M9570
Q304	48-869571	PNP; type M9571
		resistor, fixed; ± 5%; 1/4 W: unless otherwise stated
R301	6-124A81	22k
R302 thru 312	6-124A57	2.2k
R313	6-124A73	10k
R314, 315	6-124A65	4.7k
R316	6-124A33	220
R317	6-124A73	10k
R318	6-124A49	1k
R319	6-124A47	820
R320		NOT USED
R321, 322	6-124A49	1k
R323	6-124A29	150
		integrated circuit: (see note)
U301	51-84561L42	decode/demux
U302, 303	51-84561L77	hex 3-state buffer
U304	51-84561L51	hex D flip-flop
U305	51-82848M48	PROM
		mechanical parts
J300, 301	9-80377A65	RECEPTACLE, pin; 3 used

note: For optimum performance, diodes, transistors, and integrated circuits must be ordered by Motorola part numbers.

NOTES:

1. Unless otherwise indicated, all resistor values are in ohms; capacitor values are in microfarads; and inductor values are microhenries.

2. IC types are TTL & CMOS devices.

3. Part mounted on board, but extends thru front panel when module is installed.

4. Types and connections for the integrated circuits used on this board are as follows:

Reference Designation	Mfgr's Description	+5 V	Gnd	Unused Pins
U301	Decode/Demux	16	8	7, 10, 11, 12
U302	Hex 3-State Buffer	16	8	7, 9
U303	Hex 3-State Buffer	16	8	—
U304	Hex D-Flip-Flop	16	8	—
U305	Prom	16	8	—

Truth Table RTL-4095A

									Data							
	Module Write		Module Enable		Strobe											
Mode	A0	A1	A2	A3	S0	S1	S2	S3	D0	D1	WEN D2	GEN D3	HIGEN D4	MON D5	GENOFF D6	AEN D7
HI GEN	0	1	1	1	0	⎍	0	0	0	0	1	0	1	0	0	1
GEN	0	1	1	1	0	⎍	0	0	0	0	0	1	0	0	0	0
MON	0	1	1	1	0	⎍	0	0	0	0	1	0	0	1	1	0
SENS MON	0	1	1	1	0	⎍	0	0	0	0	1	0	0	1	0	1

	Module Read		Module Enable	
TEMP	0	0	1	1
PROTECT	0	0	1	1
ATTEN 0-70	0	0	1	1

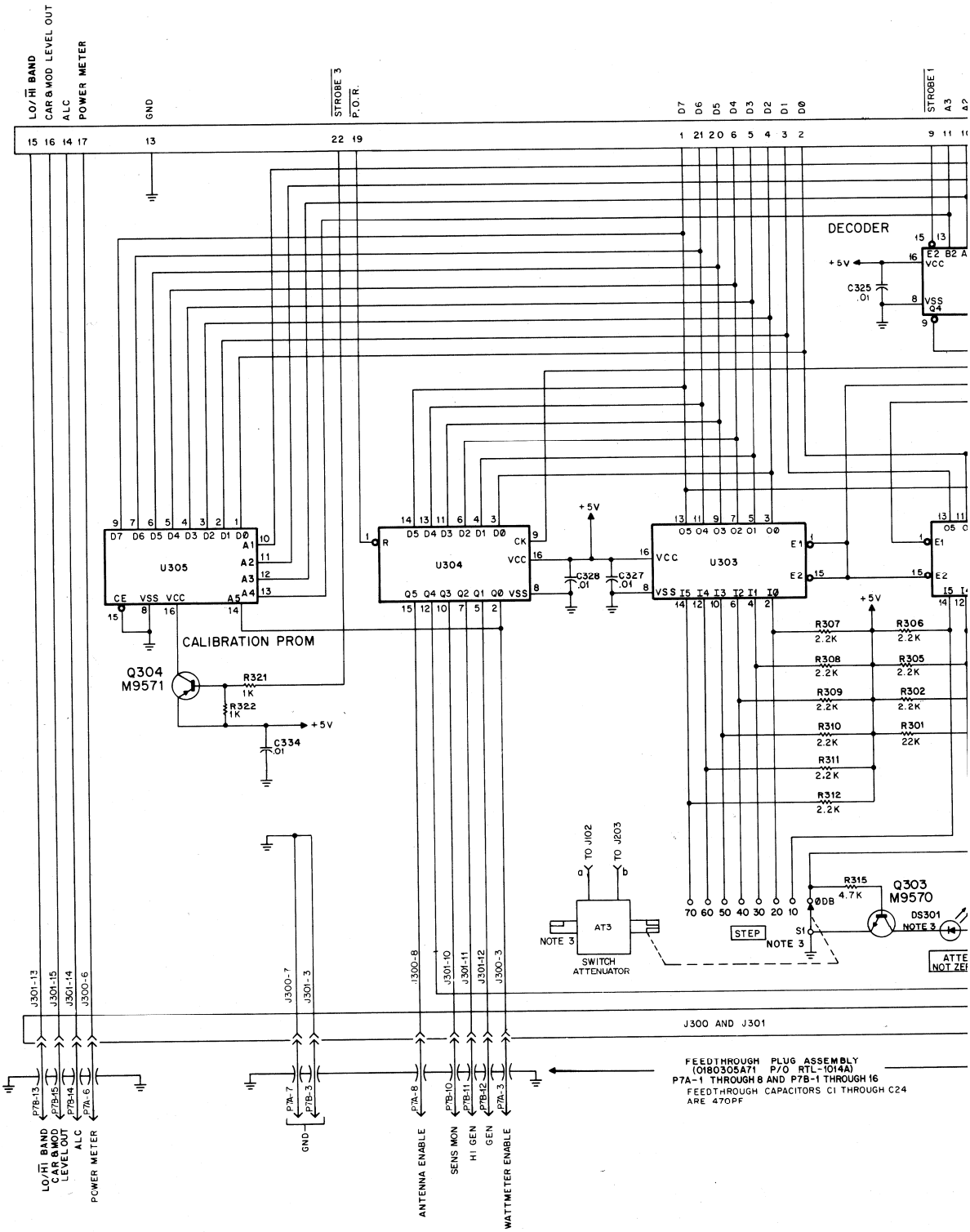
LO/HI BAND
CAR & MOD LEVEL OUT
ALC
POWER METER
GND
STROBE 3
P.O.R.
D7 D6 D5 D4 D3 D2 D1 D0
STROBE 1
DECODER
U305
CALIBRATION PROM
U304
U303
Q304
M9571
Q303
M9570
R321 1K
R322 1K
C334 .01
C328 .01
C327 .01
C325 .01
+5V
R307 2.2K
R306 2.2K
R308 2.2K
R305 2.2K
R309 2.2K
R302 2.2K
R310 2.2K
R301 22K
R311 2.2K
R312 2.2K
R315 4.7K
TO J102
TO J203
AT3
SWITCH ATTENUATOR
NOTE 3
STEP
DS301
J300 AND J301
FEEDTHROUGH PLUG ASSEMBLY
(0180305A71 P/O RTL-1014A)
P7A-1 THROUGH 8 AND P7B-1 THROUGH 16
FEEDTHROUGH CAPACITORS C1 THROUGH C24
ARE 470PF
ANTENNA ENABLE
SENS MON
HI GEN
GEN
WATTMETER ENABLE

SCHEMATI

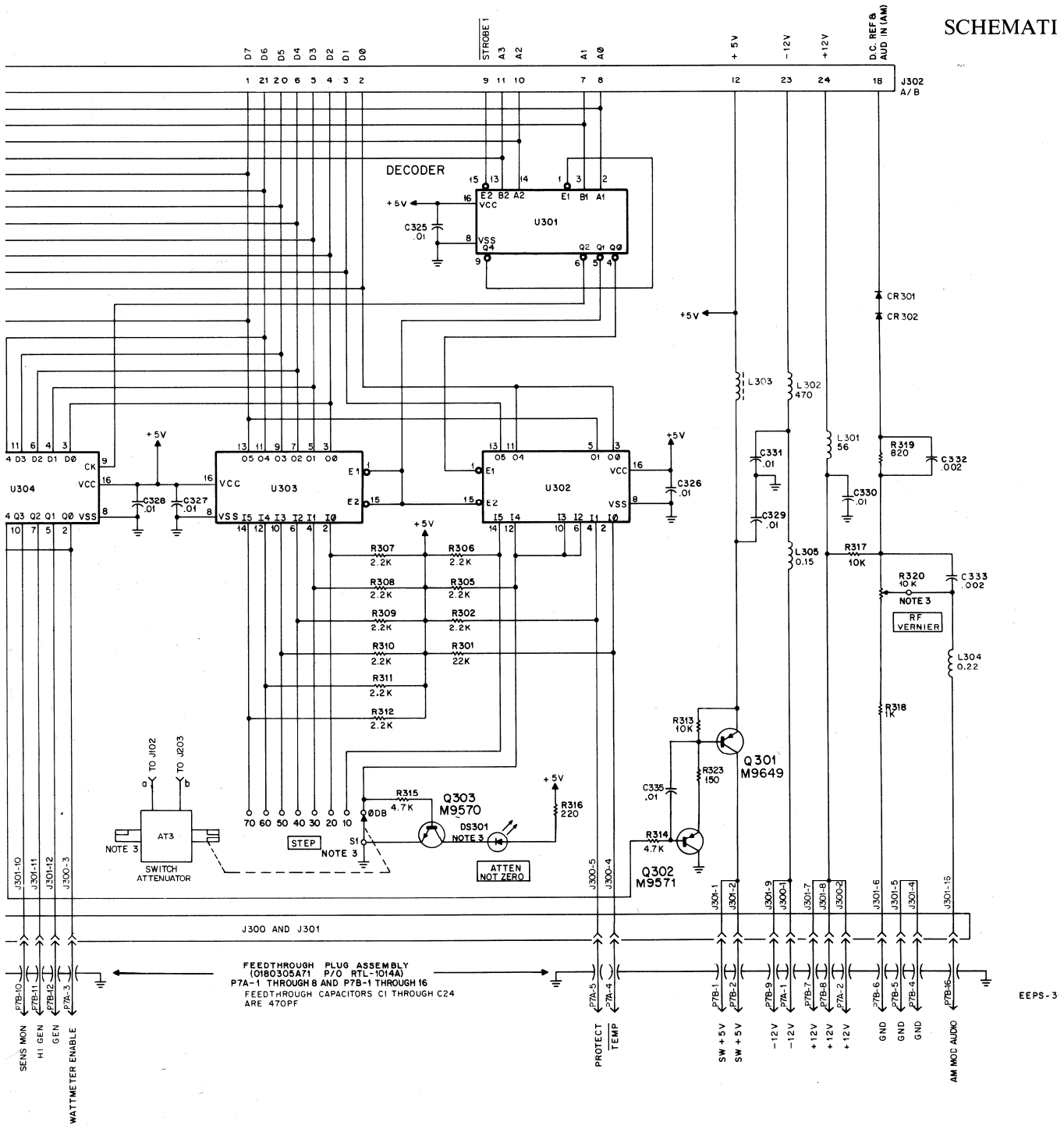

EEPS-3

RF MODULE (A11)

RF INTERCONNECT BOARD

MODEL RTL4095A

SCHEMATIC DIAGRAM, CIRCUIT BOARD DETAIL, AND PARTS LIST

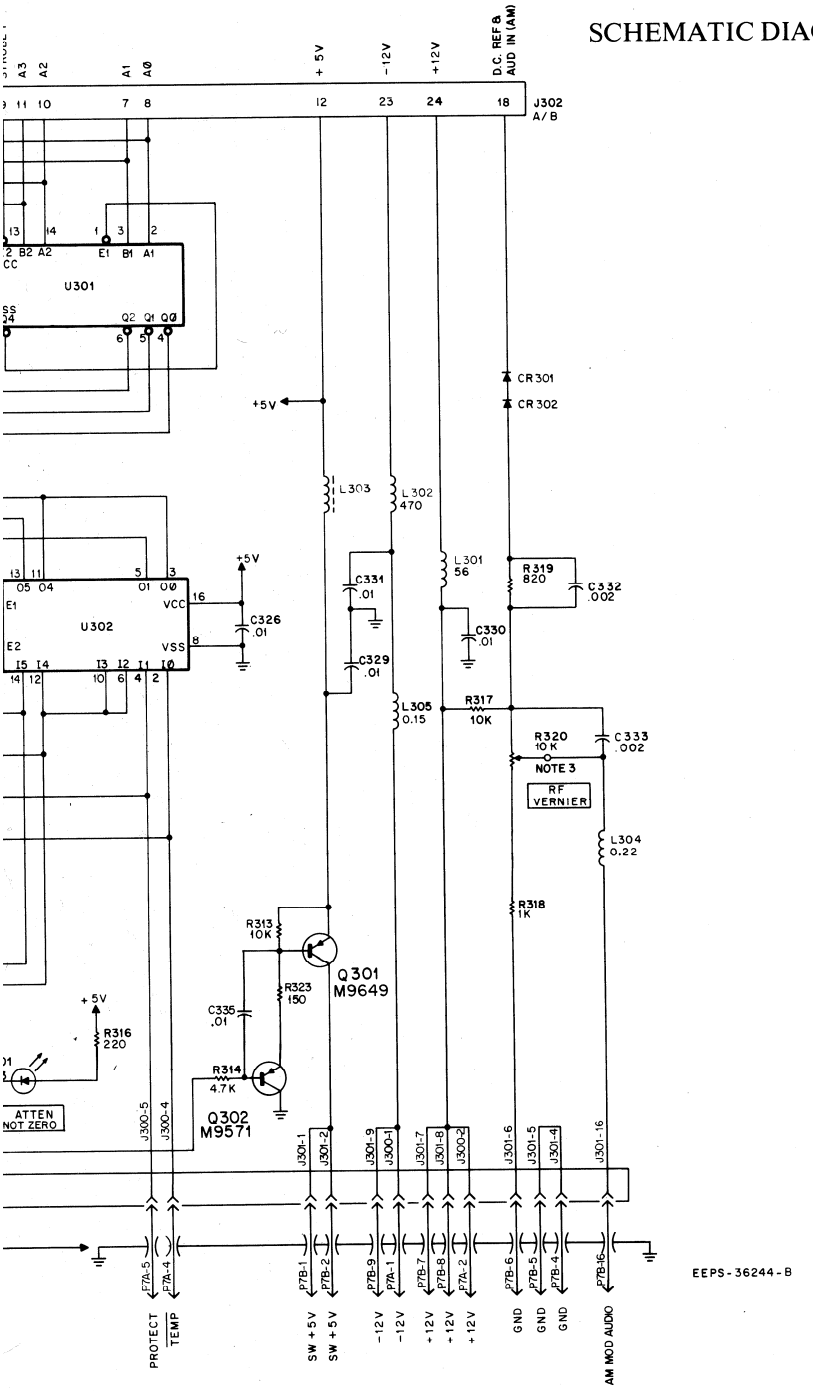

RF INTERCONNECT BOARD

Motorola No. ***PEPS-36852-O***
(Sheet 2 of 2)
8/12/83-PHI