TONE SYNTHESIZER BOARD (A12)

MODEL RTL4096A

1. DESCRIPTION

1.1 The tone synthesizer generates audio frequencies in the 10 Hz to 9999 Hz range. Frequency selection is controlled by the service monitor's microprocessor and the output of the crystal controlled 5.12 MHz oscillator.

1.2 The tone synthesizer is comprised of an address decoder, 2.56 MHz clock generator, digital-to-analog converter, harmonic filters, and frequency multipliers.

2. THEORY OF OPERATION

2.1 ADDRESS DECODER

Input lines AØ through A3 contain the address of the upper or lower frequency registers and the control latch. The dual 2-to-4 decoder is activated by the $\overline{STB2}$ signal. Level shifters U3 and U4 convert data bus logic to +12 V logic.

2.2 CLOCK GENERATOR

The output of the 5.12 MHz crystal controlled oscillator is buffered by transistor Q3 and divided by the dual-D flip-flop U25A to obtain a symmeterical 2.56 MHz clock pulse. The upper two digits of the selected frequency are latched into U6 and U7, and the lower two digits are latched into U8 and U9. The outputs of the latches are sent to the bit rate multipliers. U14 and U15 are fixed frequency dividers. U16 selects one of the four available frequencies.

2.3 DIGITAL-TO-ANALOG CONVERTER

The actual frequency output of analog switch U16 is 32 times greater than the desired frequency. A 5-bit counter comprised of U14, U17, and Q5 applies the counter output to an exclusive OR gate tree made up of U18, U19, and U20. The decoded outputs are applied to summing amplifier U21 where the square waves are synthesized into a sine wave.

2.4 HARMONIC FILTERS

A low-pass filter formed by U16, U21, and U23 is used to suppress unwanted harmonics. The filter cutoff frequency is determined by the analog switches under microprocessor control. The output frequencies available are determined by the selected frequency range.

2.5 SIGNAL SELECTION AND OUTPUT

For normal tone generation, analog switch U22 selects unattenuated filter output, and for tone remote signaling the attenuated output is selected. The attenuator, formed by U21B and U22A, provides 10 dB and 30 dB attenuation. Amplifier U24 provides signal gain and buffering. A lowpass filter removes any high frequencies components of the synthesized frequency.

2.6 DPL GENERATION

The *Digital Private-Line* (DPL) signal is generated by software and sent to the harmonic filters via U21 and switch U22.

TONE SYNTHESIZER BOARD (A12)

MODEL RTL4096A
SCHEMATIC DIAGRAM, CIRCUIT BOARD DETAIL,
AND PARTS LIST

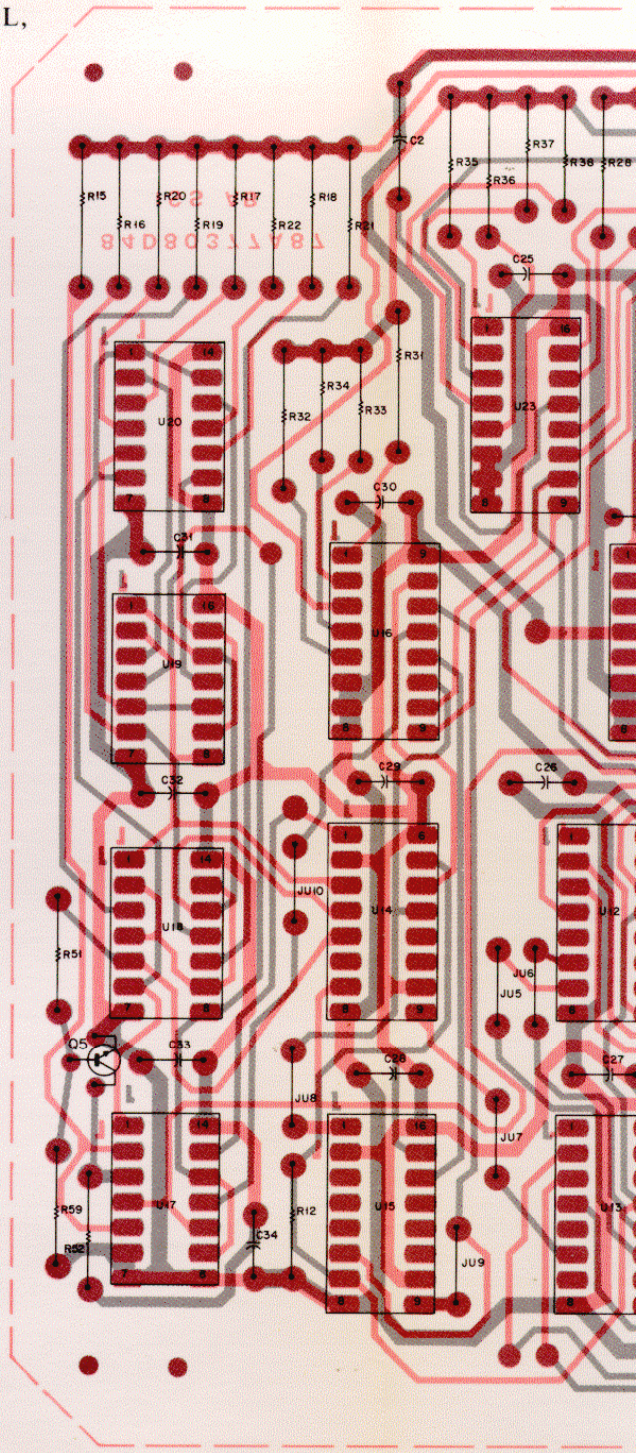

Motorola No. ***PEPS-36855-O***
(Sheet 1 of 2)
8/12/83-PHI

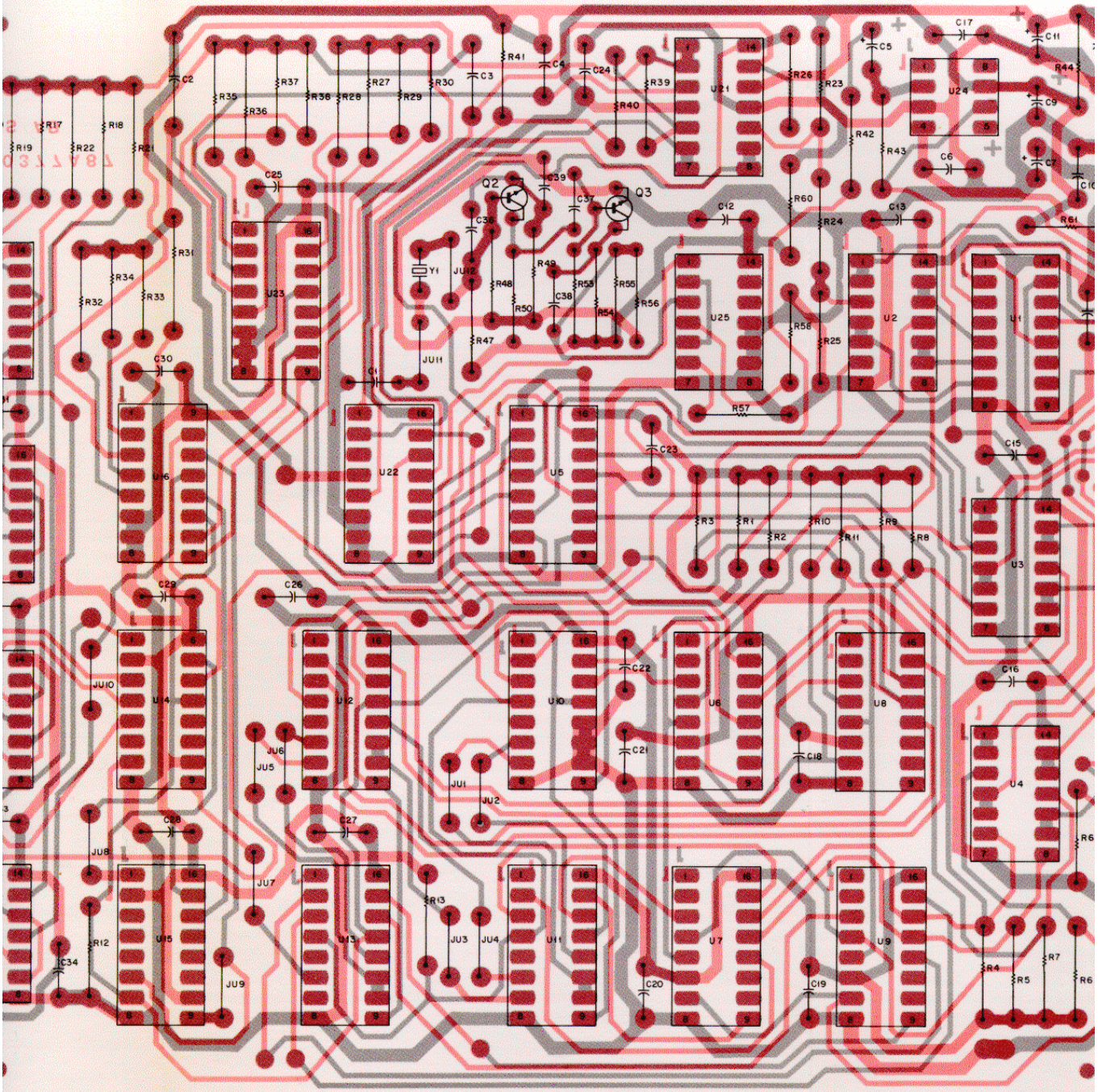

SHOWN FROM COMPONENT SIDE

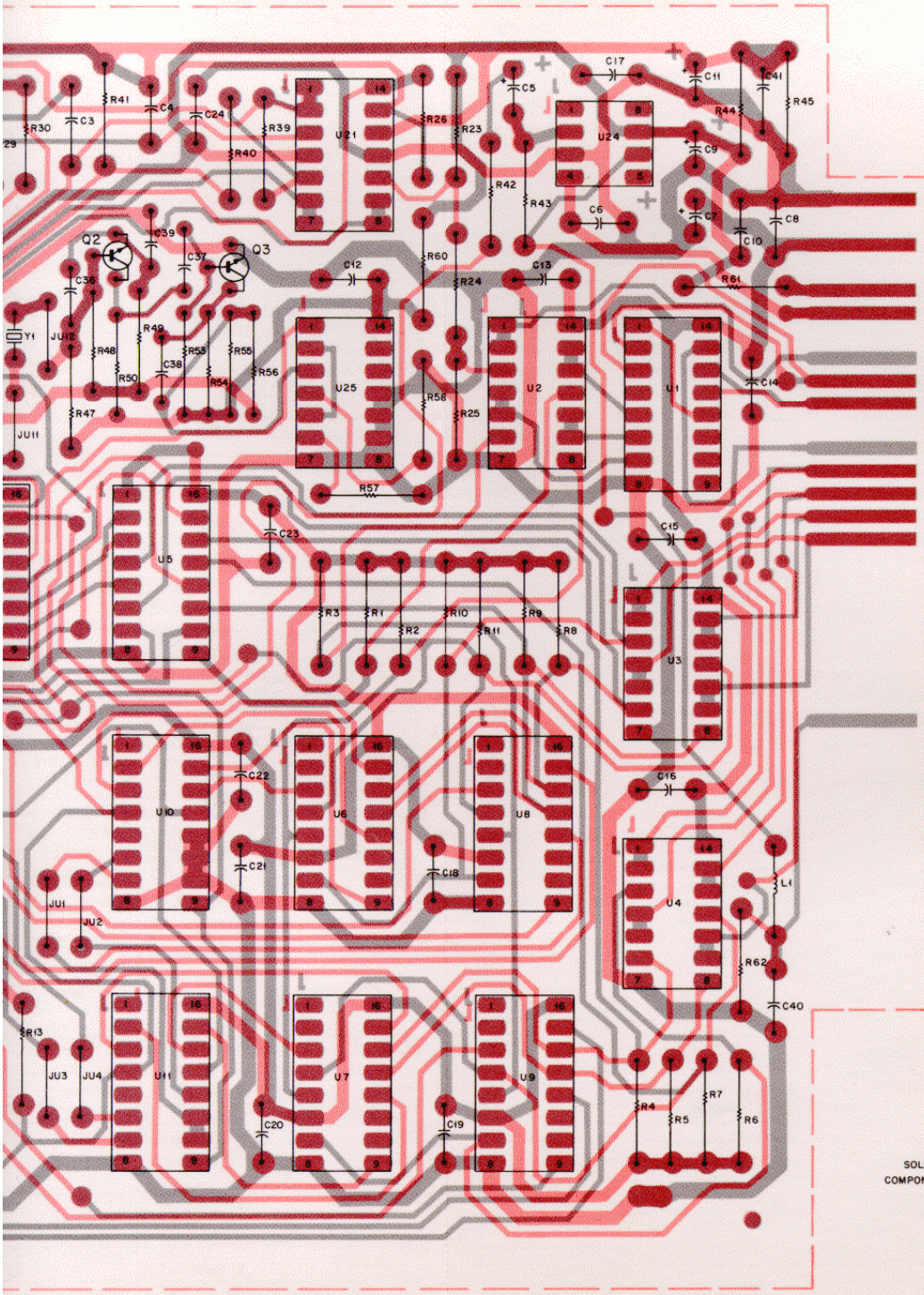

NOTE:
PIN NUMBERS AND SIGNAL NAMES IN PARENTHESES, ( ), ARE ON SOLDER SIDE.

SOLDER SIDE • BD-DEPS-36397-0
COMPONENT SIDE • BD-DEPS-36398-0
OL-EEPS-36396-A

SHOWN FROM COMPONENT SIDE

parts list

RTL4096A Tone Synthesizer Board — PL-8459-O

REFERENCE SYMBOL	MOTOROLA PART NO.	DESCRIPTION
		capacitor, fixed: uF; + 100-10%; 25 V: unless otherwise stated
C1	21-840849	20 pF ± 5%; 500 V
C2	21-863291	1500 pF ± 2%; 500 V
C3	21-82537B49	3900 pF ± 1%; 100 V
C4	21-865956	220 pF ± 3%; 500 V
C5	23-84665F26	100; 16 V
C6	21-82428B21	.01 + 10-30%; 100 V
C7	23-84665F01	10
C8	21-82428B21	.01 + 10-30%; 100 V
C9	23-84665F01	10
C10	21-82428B21	.01 + 10-30%; 100 V
C11	23-84665F01	10
C12	21-82372C03	0.1 + 80-20%; 25 V
C13 thru 34	21-82428B21	.01 + 10-30%; 100 V
C35		NOT USED
C36	21-865452	680 pF ± 10%; 500 V
C37, 38	21-82187B20	.001 ± 10%; 100 V
C39	21-865922	390 pF ± 10%; 500 V
C40	21-82187B20	.001 ± 10%; 100 V
C41	21-82428B21	.01 + 10-30%; 100 V
		coil, rf:
L1	24-82549D03	choke; 1000 uH
		transistor: (see note)
Q1		NOT USED
Q2, 3	48-869570	NPN; type M9750
Q4		NOT USED
Q5	48-869570	NPN; type M9570
		resistor, fixed ± 5%; 1/4 W: unless otherwise stated
R1 thru 11	6-11009C83	27k
R12, 13	6-11009C49	1k
R14		NOT USED
R15	6-80334A58	4.99k ± 1%
R16	6-80334A63	12.1k ± 1%
R17	6-80334A62	60.4k ± 1%
R18	6-80334A57	619k ± 1%
R19	6-80334A61	24.9k ± 1%
R20	6-80334A56	2.55k ± 1%
R21	6-80334A60	51.1k ± 1%
R22	6-80334A55	121k ± 1%
R23	6-11009C85	33k
R24	6-11009C79	18k
R25	6-11009C88	43k
R26	6-11009C49	1k
R27	6-80334A64	715k ± 1%
R28	6-80334A59	68.1k ± 1%
R29	6-11009C73	10k
R30	6-11009C67	5.6k
R31	6-80334A64	715k ± 1%
R32	6-80334A59	68.1k ± 1%
R33	6-11009C73	10k
R34	6-11009C67	5.6k
R35	6-80334A64	715k ± 1%
R36	6-80334A59	68.1k ± 1%
R37	6-11009C73	10k
R38	6-11009C67	5.6k
R39	6-11009D09	300k
R40	6-11009C73	10k
R41	6-11009D01	130k
R42	6-11009C77	15k
R43	6-11009C82	24k
R44, 45	6-83175C03	10k ± 1%; 1/8 W
R46		NOT USED
R47	6-11009C72	9.1k
R48	6-11009C80	20k
R49	6-11009C49	1k
R50	6-11009C42	510
R51, 52	6-11009C83	27k
R53	6-11009D14	470k
R54	6-11009C65	4.7k
R55, 56	6-11009C97	100k
R57, 58	6-11009C49	1k
R59	6-11009C65	4.7k
R60	6-11009C13	33
R61	6-11009C01	10
		integrated circuit: (see note)
U1	51-84561L42	dual decoder
U2, 3, 4	51-83627M04	quad open collector NAND gate
U5	51-82884L70	hex flip-flop
U6, 7, 8, 9	51-82884L15	quad latch
U10, 11, 12, 13	51-83627M59	4-bit BCD rate multiplier
U14	51-82884L07	dual binary counter
U15	51-82884L12	dual BCD counter
U16	51-82884L54	dual 4 to 1 multiplexer
U17	51-82884L13	dual D flip-flop
U18, 19, 20	51-82884L49	quad exclusive OR gate
U21	51-84561L75	quad operational amplifier
U22	51-82884L65	triple 2 to 1 multiplexer
U23	51-82884L54	dual 4 to 1 multiplexer
U24	51-84561L80	operational amplifier
U25	51-82884L13	dual D flip-flop

REFERENCE SYMBOL	MOTOROLA PART NO.	DESCRIPTION
		crystal: (see note)
Y1	48-80378A43	5.12 MHz
		mechanical parts
	45-80395A36	EJECTOR (ORG); 2 used
	14-84602K01	INSULATOR
	84-80377A87	PC BOARD

note: For optimum performance, diodes, transistors, and integrated circuits must be ordered by Motorola part numbers.

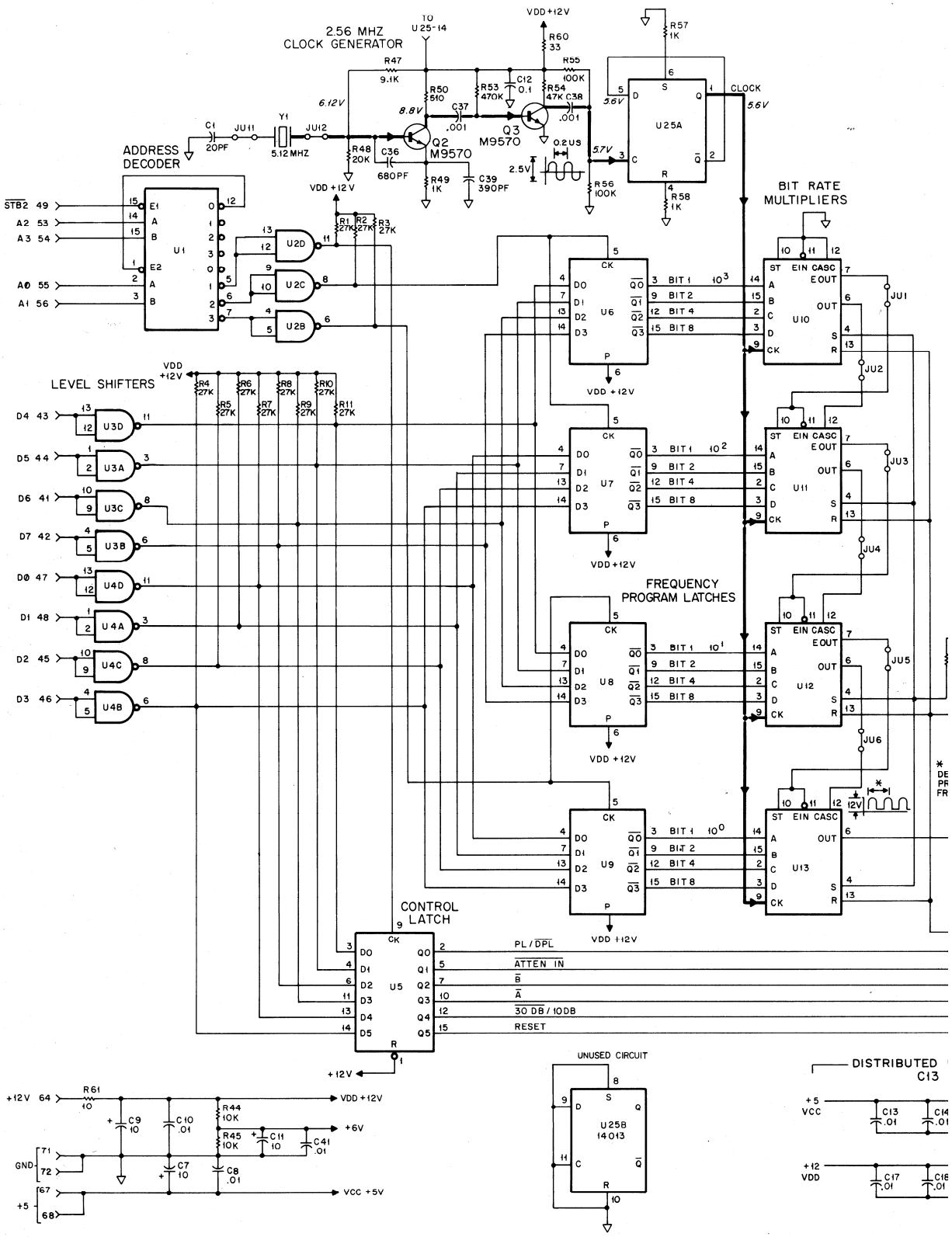
2.56 MHZ
CLOCK GENERATOR
TO U25-14
VDD +12V
R60 33
R57 1K
R47 9.1K
R50 510
R53 470K
C12 0.1
R55 100K
R54 47K
C38 .001
C37 .001
Q2 M9570
Q3 M9570
0.2US
2.5V
6.12V
8.8V
5.7V
5.6V
CLOCK
U25A
C1 20PF
JU11
Y1 5.12MHZ
JU12
R48 20K
C36 680PF
R49 1K
C39 390PF
R56 100K
R58 1K
ADDRESS DECODER
STB2 49
A2 53
A3 54
A0 55
A1 56
U1
U2D
U2C
U2B
R1 27K
R2 27K
R3 27K
BIT RATE MULTIPLIERS
U6
U7
U8
U9
U10
U11
U12
U13
BIT 1
BIT 2
BIT 4
BIT 8
EIN CASC
EOUT
OUT
JU1
JU2
JU3
JU4
JU5
JU6
LEVEL SHIFTERS
R4 27K
R5 27K
R6 27K
R7 27K
R8 27K
R9 27K
R10 27K
R11 27K
D4 43
D5 44
D6 41
D7 42
D0 47
D1 48
D2 45
D3 46
U3D
U3A
U3C
U3B
U4D
U4A
U4C
U4B
FREQUENCY PROGRAM LATCHES
CONTROL LATCH
U5
PL / DPL
ATTEN IN
B
A
30 DB / 10DB
RESET
+12V
UNUSED CIRCUIT
U25B 14013
DISTRIBUTED C13
+5 VCC
+12 VDD
+12V 64
R61 10
C9 10
C10 .01
R44 10K
R45 10K
C11 10
C41 .01
C7 10
C8 .01
VDD +12V
+6V
VCC +5V
GND
+5

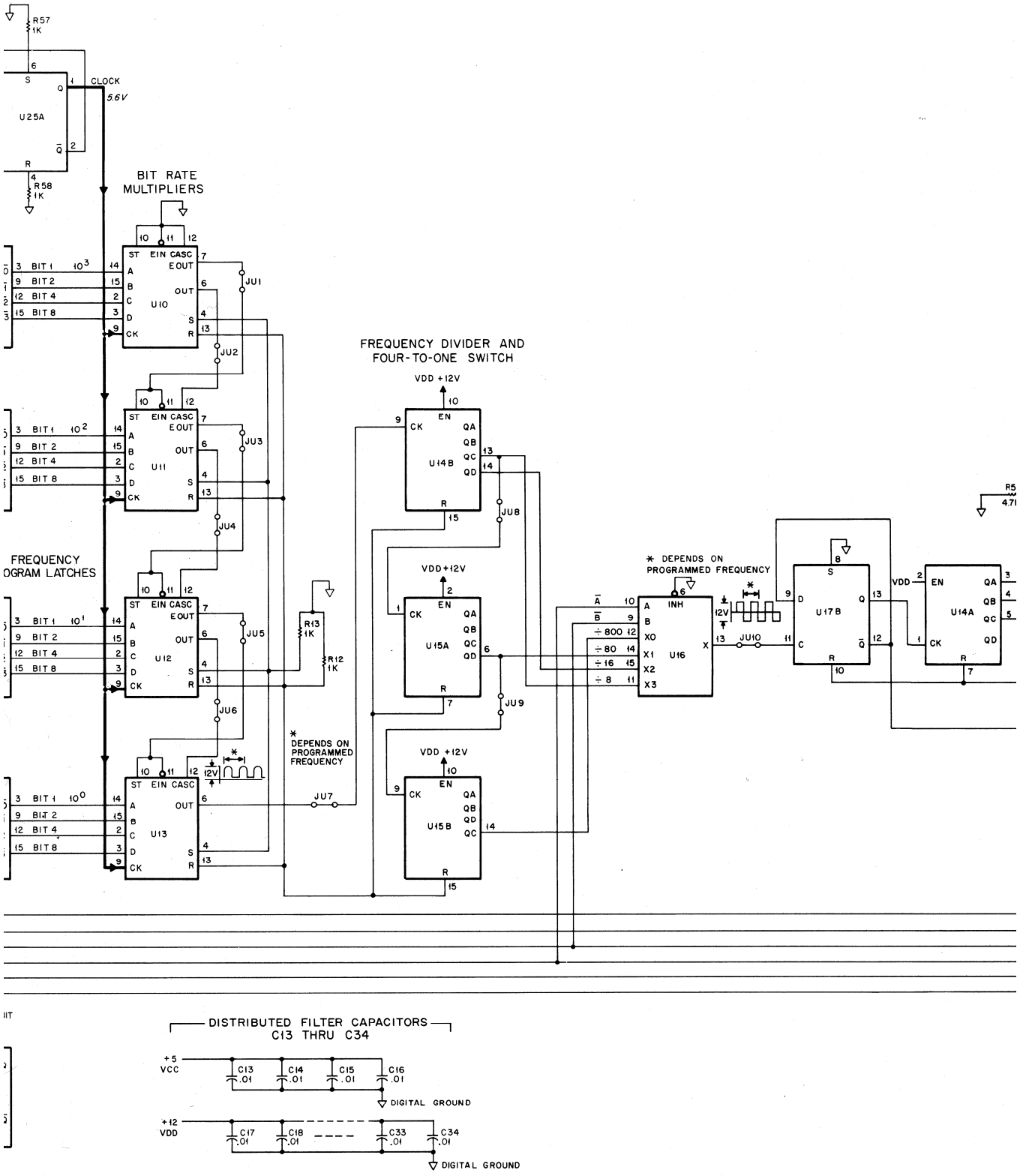
R57
1K
U25A
CLOCK
5.6V
R58
1K
BIT RATE
MULTIPLIERS
U10
U11
U12
U13
JU1
JU2
JU3
JU4
JU5
JU6
JU7
JU8
JU9
JU10
FREQUENCY DIVIDER AND
FOUR-TO-ONE SWITCH
VDD +12V
U14B
U15A
U15B
U16
U17B
U14A
R13
1K
R12
1K
* DEPENDS ON
PROGRAMMED FREQUENCY
BIT 1
BIT 2
BIT 4
BIT 8
DISTRIBUTED FILTER CAPACITORS
C13 THRU C34
+5
VCC
+12
VDD
C13 .01
C14 .01
C15 .01
C16 .01
C17 .01
C18 .01
C33 .01
C34 .01
DIGITAL GROUND

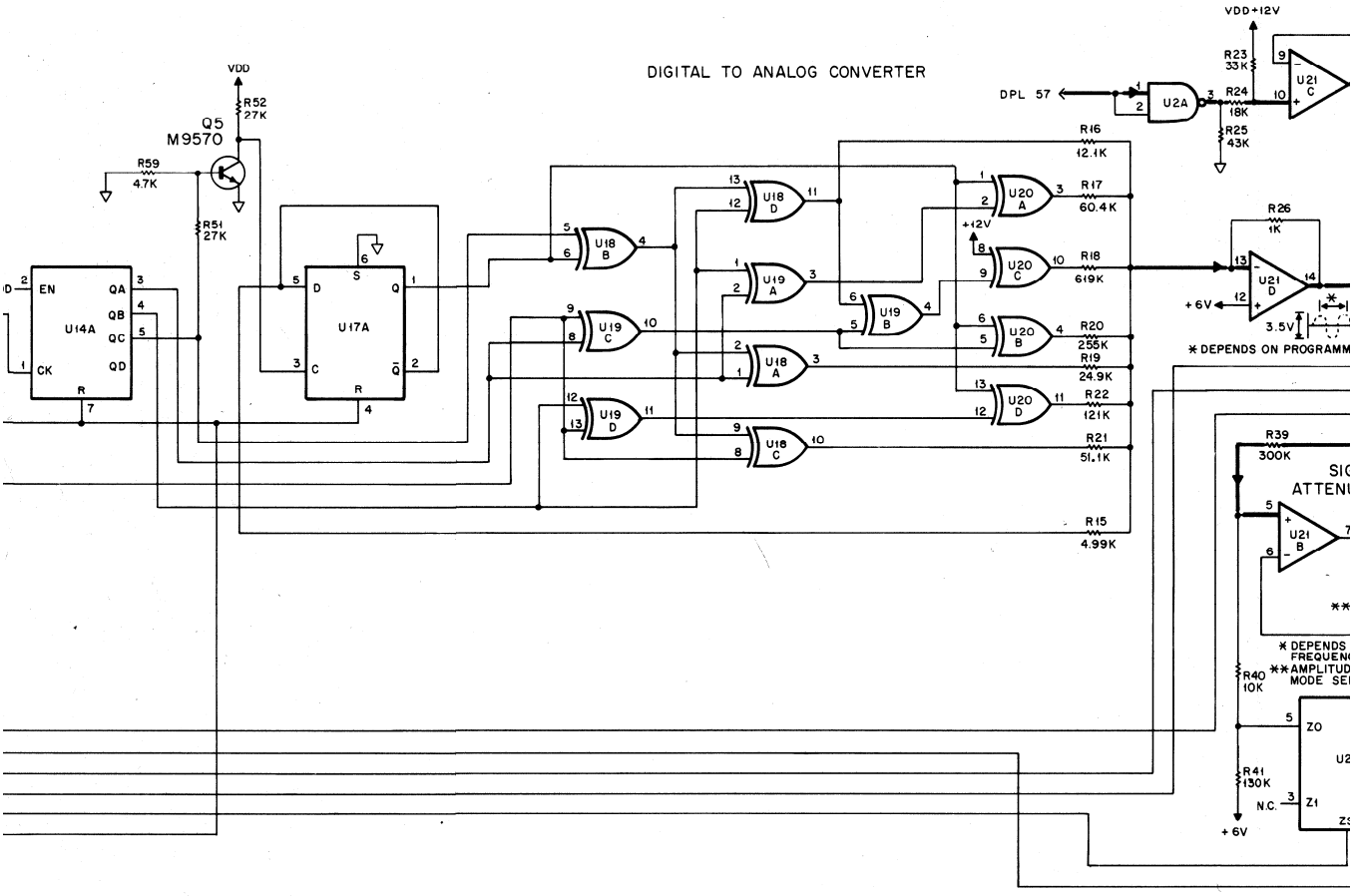
DIGITAL TO ANALOG CONVERTER
VDD
R52
27K
Q5
M9570
R59
4.7K
R51
27K
U14A
EN
CK
QA
QB
QC
QD
U17A
D
C
S
R
Q
U18 B
U19 A
U19 C
U19 D
U18 D
U18 A
U18 C
U19 B
U20 A
U20 C
U20 B
U20 D
+12V
R16
12.4K
R17
60.4K
R18
619K
R20
255K
R19
24.9K
R22
121K
R21
51.1K
R15
4.99K
DPL 57
U2A
R23
33K
R24
18K
R25
43K
VDD+12V
U21 C
R26
1K
U21 D
+6V
3.5V
* DEPENDS ON PROGRAMM
R39
300K
U21 B
R40
10K
R41
130K
N.C.
+6V
ZO
Z1

NOTES:

1. Unless otherwise indicated, all resistor values are in ohms, all capacitor values are in microfarads, and all inductor values are in microhenries.

2. IC types are TTL and CMOS devices.

3. Integrated circuit connections for this board are as follows:

Reference Designation	Mfgr's Description	VDD +12 V	VCC +5 V	Gnd	VBB −12 V
U1	Dual 2-to-4 Decoder		16	8	
U2, U3, U4	Quad Open Collector NAND		14	7	
U5	Hex D Flip-Flop	16		8	
U6, U7, U8, U9	Quad D Latch	16		8	
U10, U11, U12, U13	4-Bit BCD Rate Multiplier	16		8	
U14	Dual Binary Counter	16		8	
U15	Dual BCD Counter	16		8	
U16, U23	Dual 4-to-1 Multiplier	16		7, 8	
U17	Dual D Flip-Flop	14		7	
U18, U19, U20	Quad XOR	14		7	
U21	Quad Op Amp	4		11	
U22	Triple 2-to-1 Multiplier	16		6, 7, 8	
U24	Op Amp	7			4
U25	Dual D Flip-Flop			7	

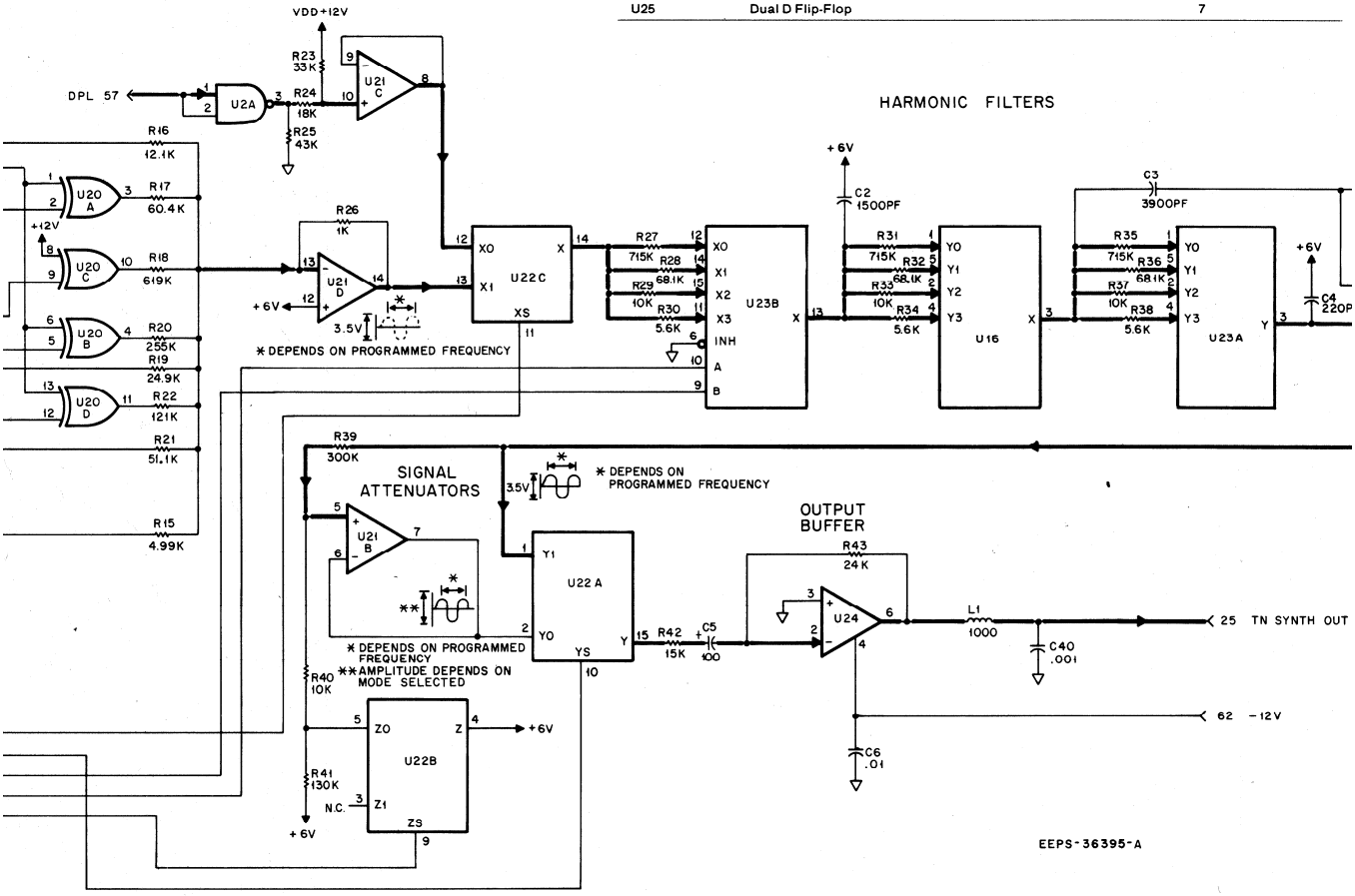

TONE SYNTHESIZER BOARD (A12)

MODEL RTL4096A
SCHEMATIC DIAGRAM, CIRCUIT BOARD DETAIL,
AND PARTS LIST

all resistor values are in ohms, all capacitor values
ductor values are in microhenries.

devices.

ns for this board are as follows:

r's Description	VDD +12 V	VCC +5 V	Gnd	VBB −12 V
Decoder		16	8	
Collector NAND		14	7	
Flop	16		8	
ch	16		8	
ate Multiplier	16		8	
Counter	16		8	
ounter	16		8	
Multiplier	16		7, 8	
Flop	14		7	
	14		7	
np	4		11	
Multiplier	16		6, 7, 8	
	7			4
Flop			7	

HARMONIC FILTERS

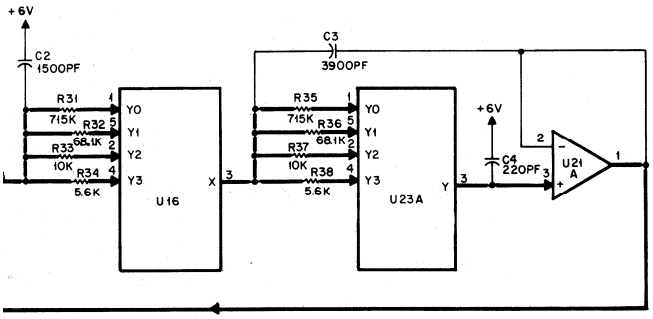

ITPUT
IFFER

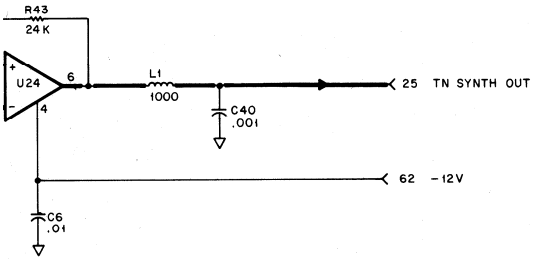

EEPS-36395-A

TONE SYNTHESIZER BOARD

Motorola No. PEPS-36855-O
(Sheet 2 of 2)
8/12/83-PHI

REFERENCE/AUDIO MODULE (A13) (TCXO/OCXO)

MODELS RTL4097A/RTL4098A

1. DESCRIPTION

The reference/audio module consists of the TCXO/OCXO board and the audio/speaker board. The reference/audio module contains: (1) the 10 MHz time base for the service monitor, (2) the audio amplifier and (3) the speaker. A standard (RTL4097A) temperature compensated crystal oscillator (TCXO) provides ±1 PPM stability. An optional (RTL4098A) oven compensated crystal oscillator (OCXO) is available which provides ±0.05 PPM stability over temperature variations.

2. THEORY OF OPERATION

2.1 TCXO/OCXO BOARD

Oscillator E1 generates a 10 MHz signal that is coupled to operational amplifier U1. The output of U1A is two 10 MHz signals 180° out-of-phase. The oscillator is driven by +5 volts supplied through a pi-filter.

2.2 AUDIO AMPLIFIER BOARD

Audio is applied through buffer amplifier U1B and a driver circuit to the speaker. The output of U1 is buffered by transistor Q1, and the signal amplified by push-pull amplifier Q2 and Q3. The amplifier circuit is powered by a +12 volt source.

REFERENCE/AUDIO MODULE (A13) (TCXO/OCXO)

MODELS RTL4097A (TCXO)
RTL4098A (OCXO)
SCHEMATIC DIAGRAM, CIRCUIT BOARD DETAIL, AND PARTS LIST

TCXO/OCXO BOARD

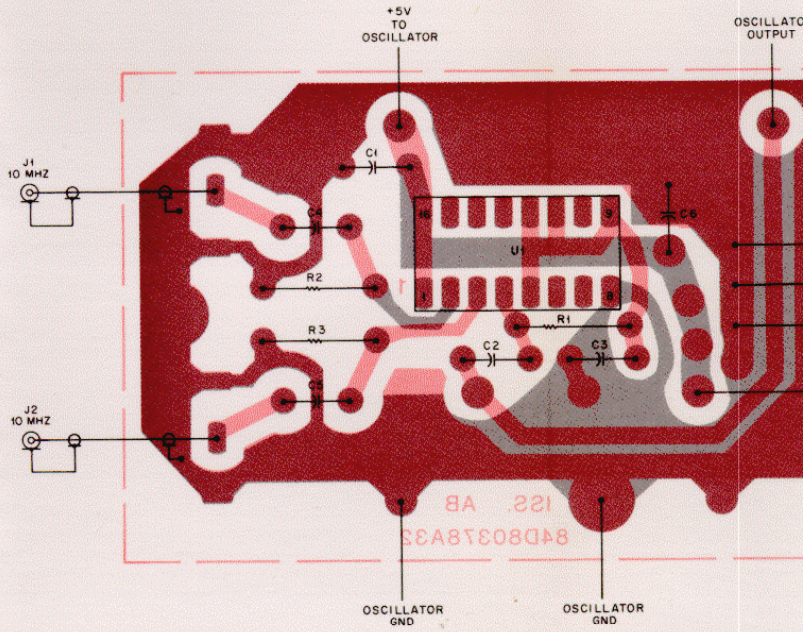

SHOWN FROM COMPONENT SIDE

Motorola No. ***PEPS-36856-O***
(Sheet 1 of 2)
8/12/83-PHI

/OCXO BOARD

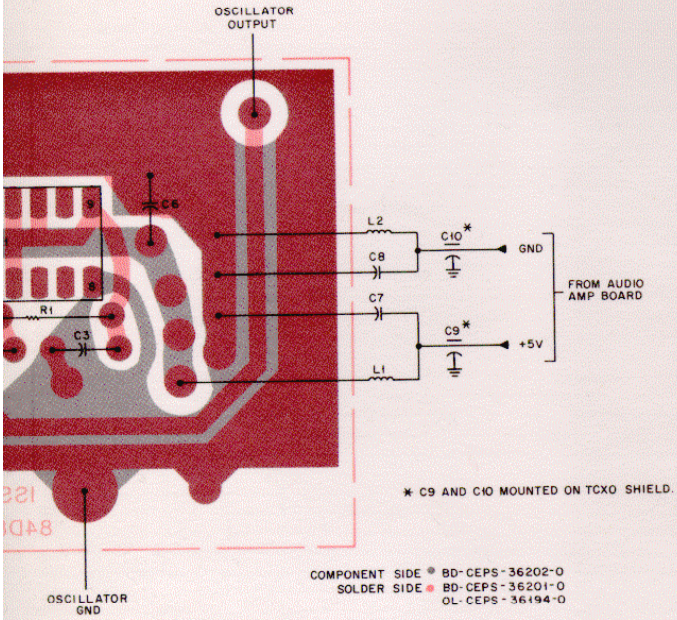

* C9 AND C10 MOUNTED ON TCXO SHIELD.

COMPONENT SIDE ● BD-CEPS-36202-0
SOLDER SIDE ● BD-CEPS-36201-0
OL-CEPS-36194-0

OMPONENT SIDE

AUDIO A

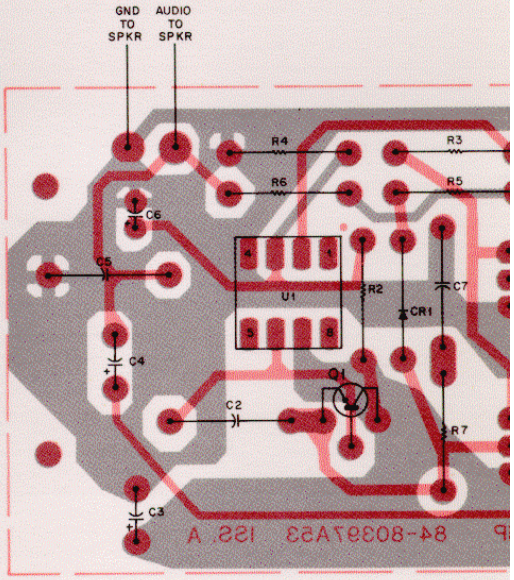

SHOWN FROM C

AUDIO AMPLIFIER BOARD

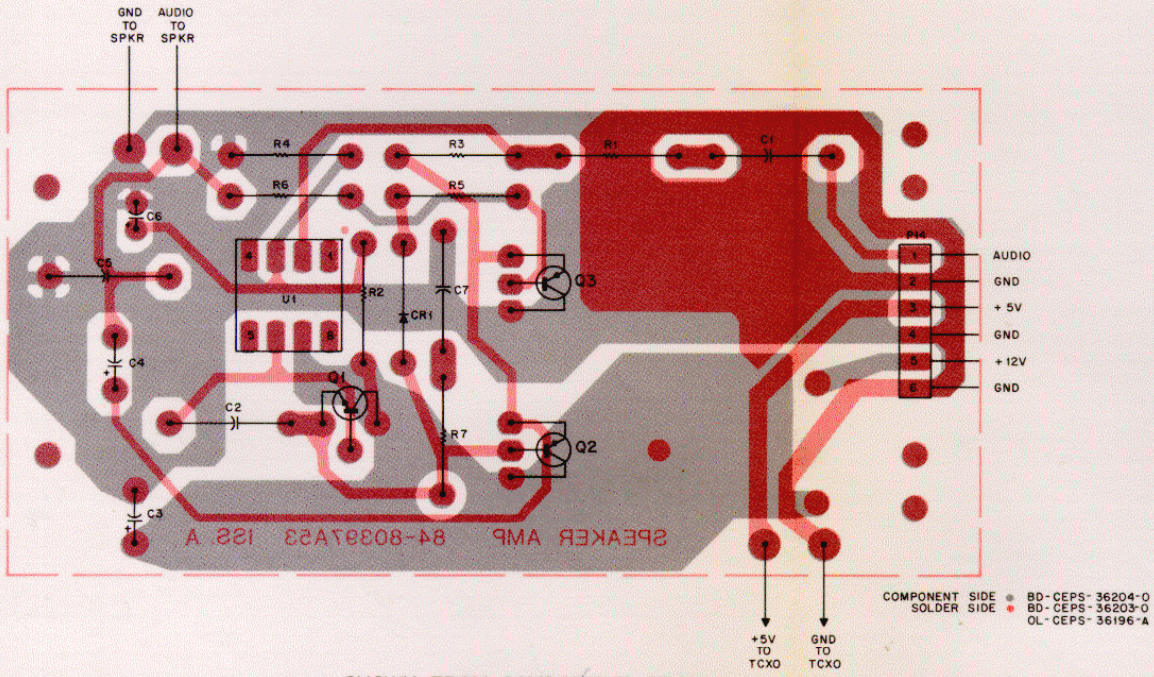

SHOWN FROM COMPONENT SIDE

parts list

RTL4097A TCXO Module
RTL4098A OCXO Module

PL-8443-O

REFERENCE SYMBOL	MOTOROLA PART NO.	DESCRIPTION
		Audio Amplifier Board
		capacitor, fixed: uF + 80-20%; 50 V: unless otherwise stated
C1	21-84448K03	0.1
C2	21-84448K05	.047
C3, 4	23-84665F06	220 uF + 150-10%; 25 V
C5	21-84448K05	.047
C6	23-84665F01	10 uF + 100-10%; 25 V
C7	21-84448K03	0.1
		diode: (see note)
CR1	48-83654H01	silicon
		connector:
P14	28-80397A52	male; 6-contact
		speaker:
LS1	50-83064J01	16 ohm
		transistor: (see note)
Q1	48-869570	NPN; type M9570
Q2	48-869640	NPN; type M9640
Q3	48-869641	PNP; type M9641
		resistor, fixed: ± 5%; 1/4 W: unless otherwise stated
R1	6-124A81	22k
R2	6-124A73	10k
R3	6-124B06	220k
R4	6-124A71	8.2k
R5	6-124A01	10
R6	6-124A41	470
R7	6-124A19	56
		integrated circuit: (see note)
U1	51-84371K60	high slew-rate operational amplifier
		TCXO/OCXO Board
		capacitor, fixed:
C1 thru 8	21-832501	.01 uF + 60-40%; 250 V
C9, 10	21-84211B03	3500 pF; GMV; 500 V (feed-thru)
		oscillator:
E1	1-80308A92	10 MHz (RTL4097A only)
	1-80308A93	10 MHz (RTL4098A only)
		connector;
J2, 3	9-84231B02	female, single-contact (phono)
		coil, rf:
L1, 2	24-82549D17	choke; 0.68 uH
		resistor, fixed: ± 5%; 1/4 W: unless otherwise stated
R1, 2, 3	6-124A42	510
		integrated circuit: (see note)
U1	51-80365A02	quad line driver
		mechanical parts
	2-7019	NUT, 4-40 × 1/4 × 3/32"; 4 used
	3-136785	SCREW, machine; 4-40 × 3/16"; 4 used
	3-139579	SCREW, machine; 4-40 × 5/16"; 2 used
	3-139581	SCREW, machine; 4-40 × 5/16"; 2 used
	3-131435	NUT, 4-40 × 1/4 × 3/32"; 5 used
	3-136886	SCREW, machine; 4-40 × 3/8"
	3-121047	SCREW, machine; 4-40 × 5/16; 2 used
	2-131865	NUT; 1/4-28 × 3/8 × 3/32"; 2 used
	7-80378A54	BRACKET
	7-80378A55	BRACKET
	26-80378A86	SHIELD
	29-82713M01	TERMINAL; 4 used
	32-80397A59	GASKET, 2 used
	35-80313A21	GRILLE, felt
	43-80370A69	SPACER, 4 used
	43-80397A61	SPACER, 2 used

note: For optimum performance, diodes, transistors, and integrated circuits must be ordered by Motorola part numbers.

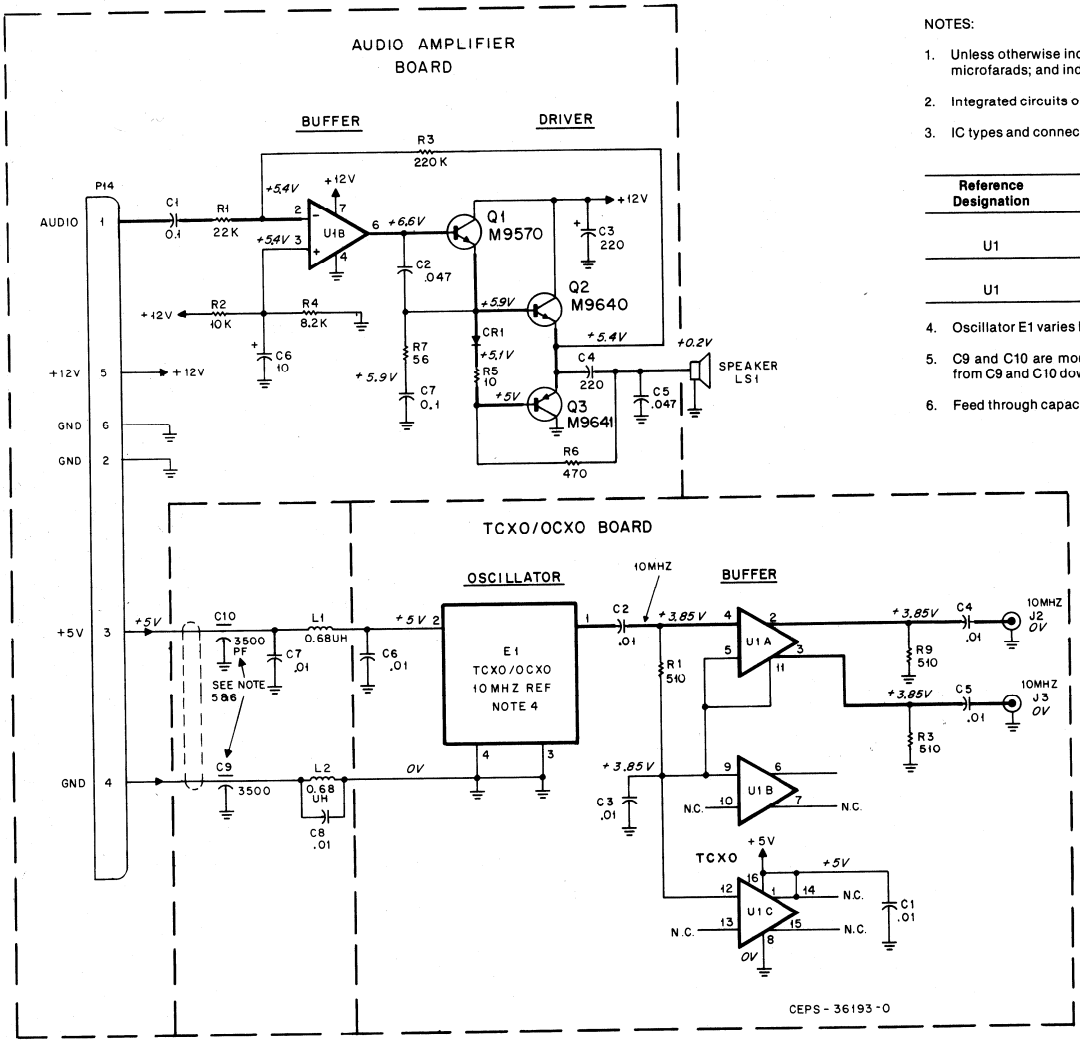

NOTES:

1. Unless otherwise indicated: resistor values a microfarads; and inductor values are in milli
2. Integrated circuits on this board are CMOS c
3. IC types and connections for this board are a

Reference Designation	Mfgr's Description
	Audio Amplifier Boa
U1	Operational Amplifi
	TCXO/OCXO Boar
U1	Quad Line Driver 3-S

4. Oscillator E1 varies between TCXO and OCX
5. C9 and C10 are mounted on TCXO/OCXO s from C9 and C10 down to the PC board.
6. Feed through capacitors C9 and C10 are wir

UNUSED CI

OFFSET NULL

U1A

REFERENCE/AUDIO MODULE (A13) (TCXO/OCXO)

MODELS RTL4097A (TCXO)
RTL4098A (OCXO)
SCHEMATIC DIAGRAM, CIRCUIT BOARD DETAIL, AND PARTS LIST

NOTES:

1. Unless otherwise indicated: resistor values are in ohms; capacitor values are in microfarads; and inductor values are in millihenries.
2. Integrated circuits on this board are CMOS devices.
3. IC types and connections for this board are as follows:

Reference Designation	Mfgr's Description	+5 V	Gnd
	Audio Amplifier Board		
U1	Operational Amplifier	7	4
	TCXO/OCXO Board		
U1	Quad Line Driver 3-State	16, 1	8

4. Oscillator E1 varies between TCXO and OCXO. See Parts List.
5. C9 and C10 are mounted on TCXO/OCXO shield. L1, L2, C7 and C8 are wired from C9 and C10 down to the PC board.
6. Feed through capacitors C9 and C10 are wired to audio amp board.

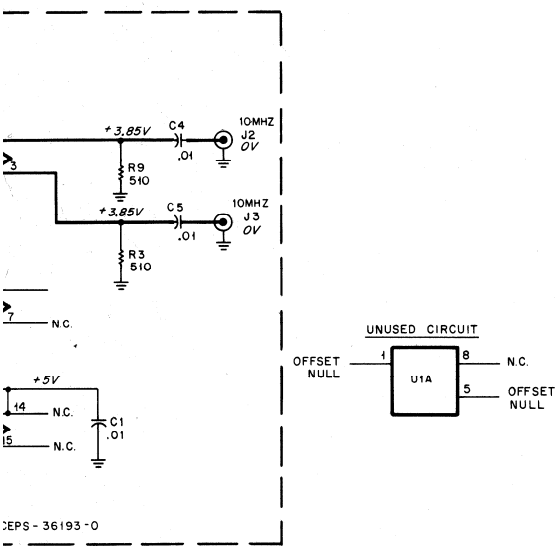

REFERENCE/AUDIO MODULE

Motorola No. ***PEPS-36856-O***
(Sheet 2 of 2)
8/12/83-PHI

FRONT PANEL INTERFACE BOARD (A14)

MODEL RTL4100A

1. DESCRIPTION

The front panel interface (FPI) board provides the electrical interface between the front panel controls and displays and internal circuits. The keyboard, display module, and front panel switches are controlled via the FPI. Additional circuits on the FPI include buffering and ranging circuits for the oscilloscope input, modulation audio circuits, and the master reset.

2. THEORY OF OPERATION

2.1 KEYBOARD AND SWITCH MATRIX SCANNING

2.1.1 The front panel switch contacts (except the bandwidth switch) and the membrane keyboard contacts are arranged in a row and column matrix that is scanned by the microprocessor. The center pole of each switch is connected to the RØ-R7 lines from U1, and individual contacts on each switch are wired to lines CØ-C5. These lines are connected to +5 volts through resistors and also to the input bus of multiplexers U5 and U6.

2.1.2 Keyboard column lines KC1-KC3 are connected to the output of U2 and row lines KØ-K7 are connected to pull-up resistors and routed to the B port of U6. Four of the output lines from U2 are connected to pull-up resistors and used as load signals for output latches.

2.1.3 The microprocessor reads each row by setting address lines AØ-A3. The $\overline{\text{STBØ}}$ pulse sets the row line low and enables U5 and U6 on the data bus. Address A3 determines whether the multiplexers gate the keyboard or switch matrix data onto the bus. A low on the C- or K-lines indicates switch closure at the particular crosspoint. U5 and U6 invert the data in order to send a high to the microprocessor.

2.1.4 The microphone PTT line and the bandwidth switch are wired directly to U6. These lines are read anytime the switch matrix is addressed.

2.2 DISPLAY INTERFACE

The display interface consists of the LCD control latch, CD synthesizer mode indicator latch, and the LCD serial interface. Control lines CSA, CSB, and $\overline{\text{C}}$/D originate at the LCD control latch. Code synthesizer mode indication lines MØ-M3 are latched by U8. The parallel-to-serial converter is formed by five devices, U12, U13, U14, U15, and U31. This circuit applies the LCD CK, SCK, and SI signals. The LCD CK signal frequency is 170 kHz and is sent to both the display module and the LCD serial interface.

2.3 POWER DISTRIBUTION

Regulators U16 and U32 produce regulated ±8 volts to power the analog devices. Separate ground runners are used to minimize noise. U20B is a +7 volt reference source that is supplied to the display module and the master reset circuit.

2.4 MASTER RESET

2.4.1 The master reset circuit produces the signal that is used to initialize the service monitor on power-up. When power supplies drop below predetermined limits, the reset signal stops the microprocessor and serves to protect the battery-backed CMOS memory contents.

2.4.2 When power is first applied to the service monitor, capacitor C9 is discharged and transistor Q1 is turned on holding the $\overline{\text{P.O.R.}}$ (Power-On-Reset) low. As C9 charges, U17B switches and Q1 is turned off.

2.4.3 Comparators U17C and U17D monitor the +12 volt and +5 volt power supplies. When either voltage drops below predetermined values (+10.8 V dc or +4.7 V dc), Q6 is turned off and Q8 pulls $\overline{\text{P.O.R.}}$ low. When power is restored, Q7 discharges C9 to ensure that the proper delay occurs during reinitialization.

2.5 MODULATION AUDIO

Three sources are provided for simultaneous modulation of the rf output signal. The code synthesizer output is combined with the option card output (when installed); a filtered 1 kHz squarewave provides the fixed 1 kHz modulation source, and external modulation is provided by connecting a microphone to the front panel jack (MIC). The three level adjusted sources are combined by U23A and the composite signal is routed to the modulation display selector and the MOD line for internal distribution.

2.6 SCOPE INPUT

2.6.1 The oscilloscope step attenuator can be switched between internal audio sources and the external input. Analog switch U18 selects: (1) recovered audio when the monitor mode is selected, and (2) modulation when the GEN mode is selected. U18 is disabled when the step attenuator is connected to the external input.

2.6.2 Relays K8 and K3 are energized when the internal source is selected. K8 switches a load onto the external input when the step attenuator is being used to display modulation. K2 is energized when viewing the external input.

2.6.3 The step attenuator provides attenuation ranges of 1, .1, .01, and .001. The input impedance is 1 megohm with a 500 kHz bandwidth. A unity gain buffer amplifier drives the scope amplifier board. Signals controlling the modulation display selector and the scope input are latched by U8, U9, and U11. U10 and U33 drive the relays.

parts list

RTL4100A Front Panel Interface Board — PL-8460-O

REFERENCE SYMBOL	MOTOROLA PART NO.	DESCRIPTION
		battery:
BT1	RPX4258A	BATTERY; 3 V lithium
		capacitor, fixed:
C1	23-84665F01	10 uF + 100-10%; 25 V
C2	21-82428B21	.01 uF + 10-30%; 100 V
C3	23-84762H06	1 uF ± 20%; 35 V
C4	21-82428B21	.01 uF + 10-30%; 100 V
C5, 6	23-84762H06	1 uF ± 20%; 35 V
C7	21-82372C03	0.1 uF + 80-20%; 25 V
C8	21-82428B21	.01 uF + 10-30%; 100 V
C9	23-84762H06	1 uF ± 20%; 35 V
C10	8-84637L06	6800 pF + 5%; 630 V
C11	20-34307A11	variable; 5.5, 18 pF
C12	21-84494B11	200 pF ± 5%; 500 V
C13	21-859773	2500 pF ± 5%; 500 V
C14	8-84637L09	.023 uF ± 5%; 400 V
C15	21-840047	150 pF ± 5%; 500 V
C16, 17, 18	8-84326A48	.022 uF ± 1%; 50 V
C19	23-84665F01	10 uF + 100-10%; 25 V
C20	8-11017A02	.0015 uF ± 5%; 50 V
C21	21-11014B47	82 pF ± 5%; 100 V
C22	23-84762H06	1 uF ± 20%; 35 V
C23	23-84665F01	10 uF + 100-10%; 25 V
C24	8-11017A02	.0015 uF ± 5%; 50 V
C25	21-11014B47	82 pF ± 5%; 100 V
C26	23-84665F01	10 uF + 100-10%; 25 V
C27	21-82187B14	100 pF ± 10%; 100 V
C28	21-84494B24	39 pF ± 5%; 500 V
C29	8-82096J21	.33 uF ± 10%; 250 V
C30	21-84494B16	330 pF ± 5%; 500 V
C31	23-84762H06	1 uF ± 20%; 35 V
C32	8-11017A03	.0022 uF ± 5%; 50 V
C33	21-82372C03	0.1 uF + 80-20%; 25 V
C34 thru 56	21-82428B21	.01 uF + 10-30%; 100 V
C66	20-34307A11	variable; 5.5-15 pF
C67		NOT USED
C68	8-84637L04	3300 pF ± 10%; 630 V
C69	21-865923	.001 uF ± 10%; 500 V
C70	21-859938	75 pF ± 5%; 500 V
C71		NOT USED
C72	21-82187B08	220 pF ± 10%; 500 V
C73	21-859938	75 pF ± 5%; 500 V
C74		NOT USED
C75	21-84494B24	39 pF ± 5%; 500 V
C76	21-859940	20 pF ± 5%; 500 V
		diode: (see note)
CR1 thru 8	48-83654H01	silicon
		relay:
K1 thru 8	80-80346A01	1 form "A"; coil res: 1k
		transistor: (see note)
Q1, 2, 3	48-869570	NPN; type M9750
Q4, 5	48-869831	field-effect; M9831
Q6, 7, 8	48-869570	NPN; type M9750
		resistor, fixed: ± 5%; 1/4 W: unless otherwise stated
R1, 2, 3	6-11009C97	100k
R4	6-11009C25	100
R5	6-11009C83	27k
R6, 7	6-11009C73	10k
R8	6-11009C44	620
R9	18-83452F13	variable; 10k
R10	6-11009C57	2.2k
R11	6-11009C01	10
R12	6-11009C57	2.2k
R13	6-11009C35	270
R14, 15	6-11009C73	10k
R16	6-11009C49	1k
R17	6-10621D17	18.2k ± 1%; 1/8 W
R18	6-10621D42	33.2k ± 1%; 1/8 W
R19	6-10621D13	16.5k ± 1%; 1/8 W
R20	6-10621D42	33.2k ± 1%; 1/8 W
R21	6-11009C97	100k
R22	6-11009C81	22k
R23, 24	6-11009C83	27k
R25	6-11009C60	3k
R26	6-11009C59	2.7k
R27	6-11009C49	1k
R28	6-80390A80	1.82 meg ± .5%; 1/8 W
R29	6-80390A81	182k ± .5%
R30	6-80390A82	18.2k ± .5%
R31	6-80390A83	2.1k ± .5%
R32	6-80390A84	54.9k ± .5%
R33	6-11009D22	1 meg
R34	6-11009C59	2.7k
R35	6-83175C03	10k ± 1%; 1/8 W
R36	6-11009C59	2.7k
R37	6-11009C67	5.6k
R38	6-10621C72	6.34k + 1%; 1/8 W
R39		NOT USED
R40, 41	6-11009C73	10k
R42	6-11009C44	620
R43	6-11009C73	10k
R44	6-11009C70	7.5k
R45	6-11009C69	6.8k
R46	6-10621D48	38.3k ± 1%; 1/8 W
R47	6-10621B50	348 ± 1%; 1/8 W
R48	6-10621E05	147k ± 1%; 1/8 W
R49	6-11009C47	820
R50	6-11009C43	560
R51	6-10621C62	4.99k ± 1%; 1/8 W
R52	6-11009D02	150k
R53	6-10621C12	1.5k ± 1%; 1/8 W
R54	6-10621C17	1.69k ± 1%; 1/8 W
R55	6-11009D06	220k
R56	6-11009C91	56k
R57, 58	6-11009C66	5.1k
R59	6-11009C91	56k
R60	6-10621C15	1.62k ± 1%; 1/8 W
R61	6-10621D09	15k ± 1%; 1/8 W
R62	6-10621C61	4.87k ± 1%; 1/8 W
R63	6-10621D05	13.7k ± 1%; 1/8 W
R64	6-10621C34	2.55k ± 1%; 1/8 W
R65	6-10621C17	1.69k ± 1%; 1/8 W
R66	18-83452F13	variable; 10k
R67, 68, 69	6-11009C73	10k
R70	6-11009C53	1.5k
R71, 72	6-11009C62	3.6k
R73	6-11009C29	150
R74	6-11009C69	6.8k
R75	6-11009C67	5.6k
R76, 77	6-11009C73	10k
R78	6-124D38	4.7 meg ± 10%
R79	6-11009C73	10k
R80	18-83452F13	variable; 10k
R81		NOT USED
R82	6-11009C73	10k
R83	6-11009C83	27k
R84	6-11009C73	10k
R85, 86	6-11009C83	27k
R87, 88	6-11009C97	100k
R89	6-11009C43	560
R90	6-11009C71	8.2k
R91 thru 99	6-11009C83	27k
R100	6-11009C65	4.7k
R101	6-80390A80	1.82 meg ± .5%
R102	6-10621E18	200k ± 1%; 1/8 W
R103, 104	6-11009C01	10
R105	6-124B54	22 meg
R106	6-11009C57	2.2k
		integrated circuit: (see note)
U1, 2	51-84561L47	dual 1 of 4 decoder
U3, 4	51-84561L03	hex inverter
U5, 6	51-82609M60	quad 2 to 1 multiplexer w/inverter; three-state output
U7	51-82884L05	quad NAND gate
U8, 9	51-82884L70	hex D flip-flop
U10	51-83629M08	quad operational amplifier
U11	51-82884L15	quad latch
U12	51-82884L33	8 bit parallel in/serial out shift register
U13	51-82884L13	dual D flip-flop
U14	51-82884L17	triple NOR gate
U15	51-82884L35	decade counter
U16	51-80365A30	voltage regulator
U17	51-84371K74	quad comparator
U18	51-82884L54	dual 1 of 4 multiplexer
U19	51-80365A09	operational amplifier
U20	51-84561L75	quad operational amplifier
U21, 22, 23	51-80365A07	dual operational amplifier
U24	51-80365A09	operational amplifier
U25	51-80365A07	dual operational amplifier
U26	51-80365A09	operational amplifier
U27, 28, 29	51-82142K06	resistor network
U30	51-82142K14	resistor network
U31	51-84561L03	hex inverter
U32	51-80365A29	voltage regulator
U33	51-83629M08	quad operational amplifier
		mechanical parts
	7-80395A57	BRACKET, (right hand)
	7-80395A58	BRACKET, (left hand)
	42-80313A70	TIE WRAP
	45-80395A35	EJECTOR (BLK); 2 used
	75-80378A90	FOOT, rubber; 2 used
	84-80377A81	CIRCUIT BOARD
	28-84729L03	CONNECTOR, male, keyboard
	9-80330A49	CONNECTOR, 16-pin
	9-83250M01	CONNECTOR, female, phono-type

note: For optimum performance, diodes, transistors, and integrated circuits must be ordered by Motorola part numbers.