RF Uni

Diagram

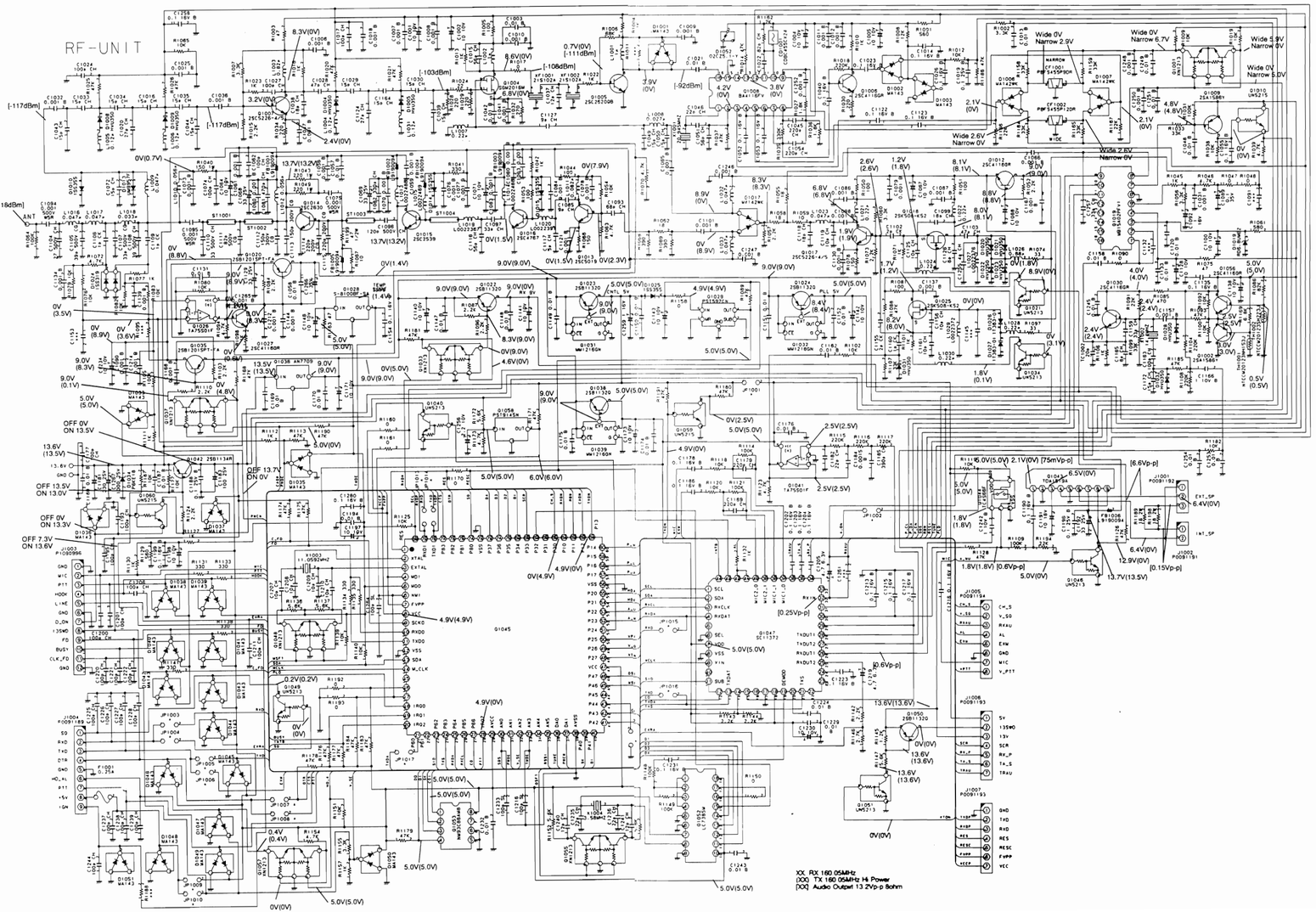

Front-AUnit

Circuit Diagram

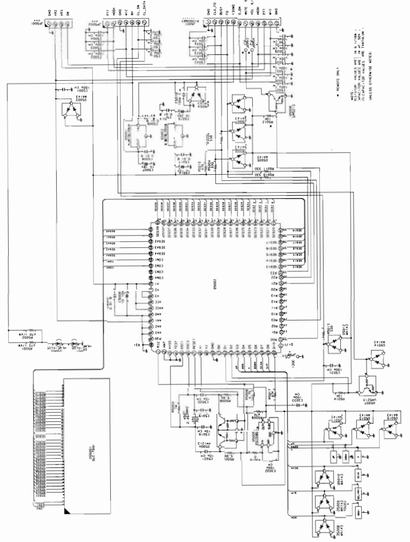

Front-B Unit
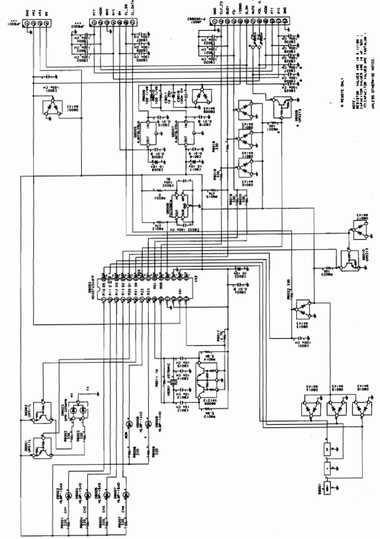
Circuit Diagram