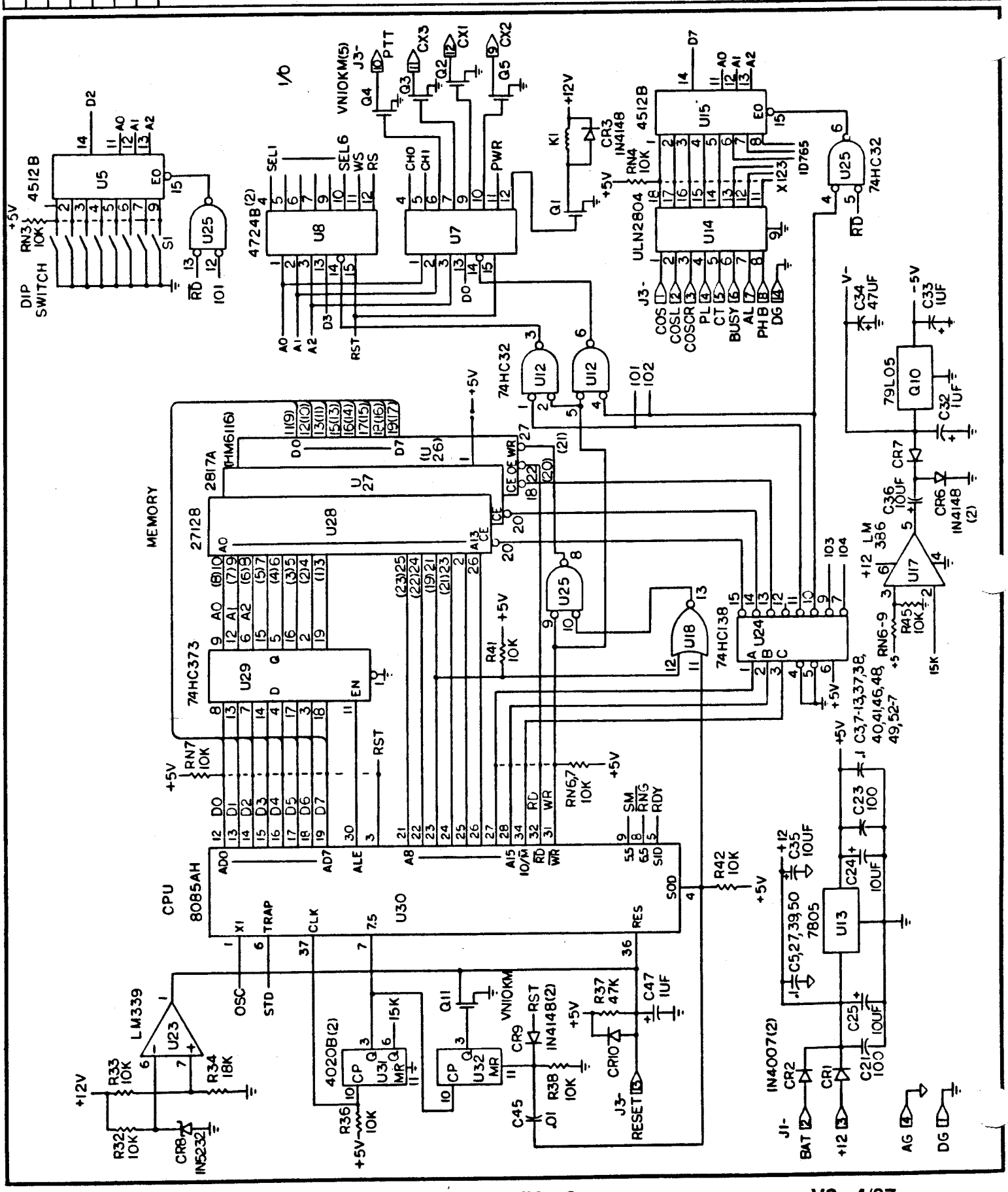
acc
advanced computer controls
RC-85
I/O
MEMORY
CPU
8085AH
U30
74HC373
U29
27128
U28
2817A
U27
HM6116
74HC138
U24
ULN2804
U14
4512B
U15
4724B
U8
U7
U5
DIP SWITCH
74HC32
U12
U25
79L05
Q10
LM 386
U17
7805
U13
LM339
U23
4020B
U31
U32
U18
J3-
J1-
VNIOKM(5)
VNIOKM
RESET
BAT
AG
DG

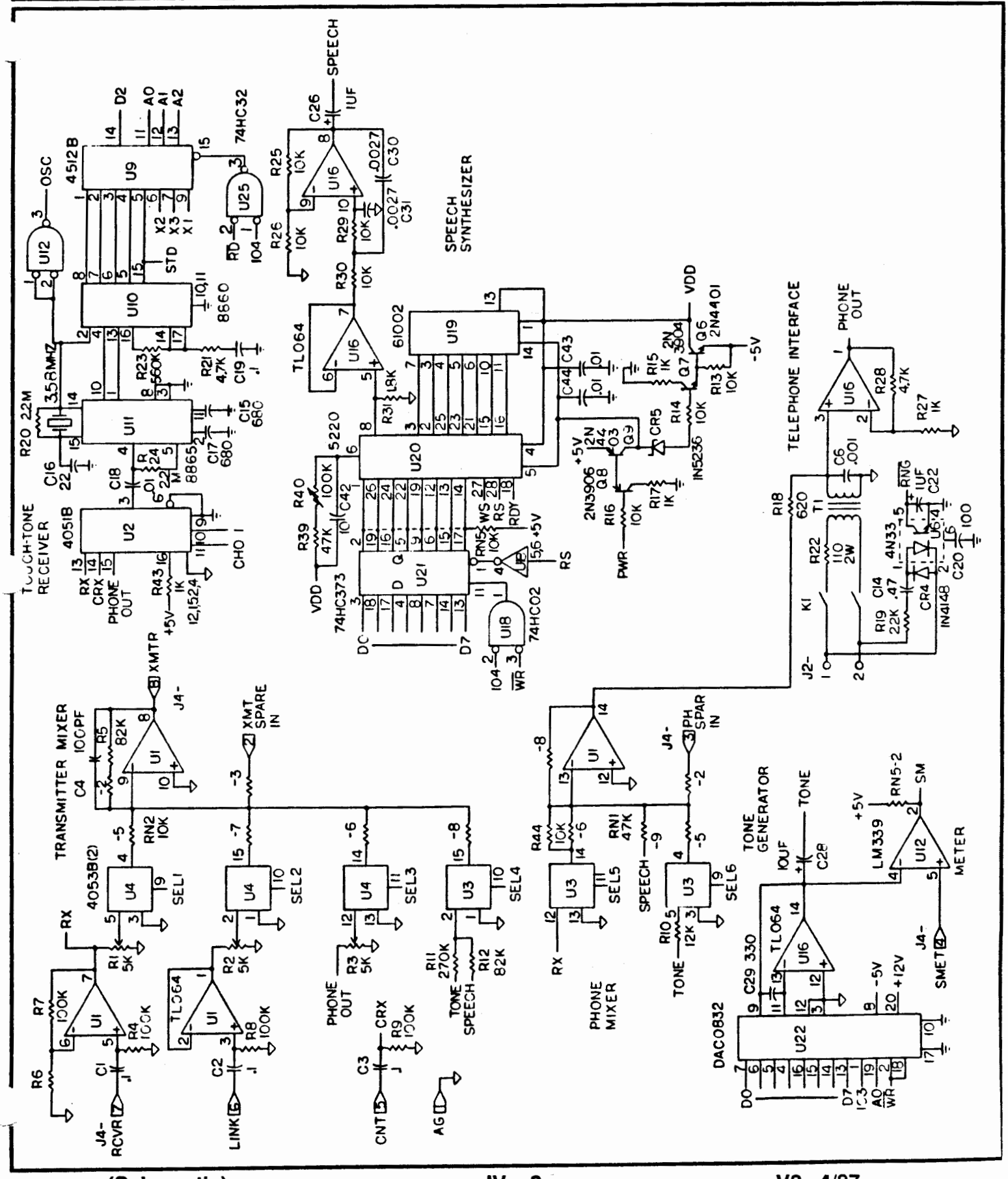
TOUCH-TONE RECEIVER
TRANSMITTER MIXER
SPEECH SYNTHESIZER
TELEPHONE INTERFACE
TONE GENERATOR
PHONE MIXER
DAC0832
LM339
TL064
74HC373
74HC02
74HC32
4512B
4051B
4053B(2)
8660
8865
61002
5220
PHONE OUT
SPEECH
XMTR
XMT SPARE IN
PH SPAR IN
METER
SMETR
TONE
RX
CRX
CNT
LINK
AG
RCVR
OSC
VDD
-5V
+5V
+12V
PWR
RS
RNG