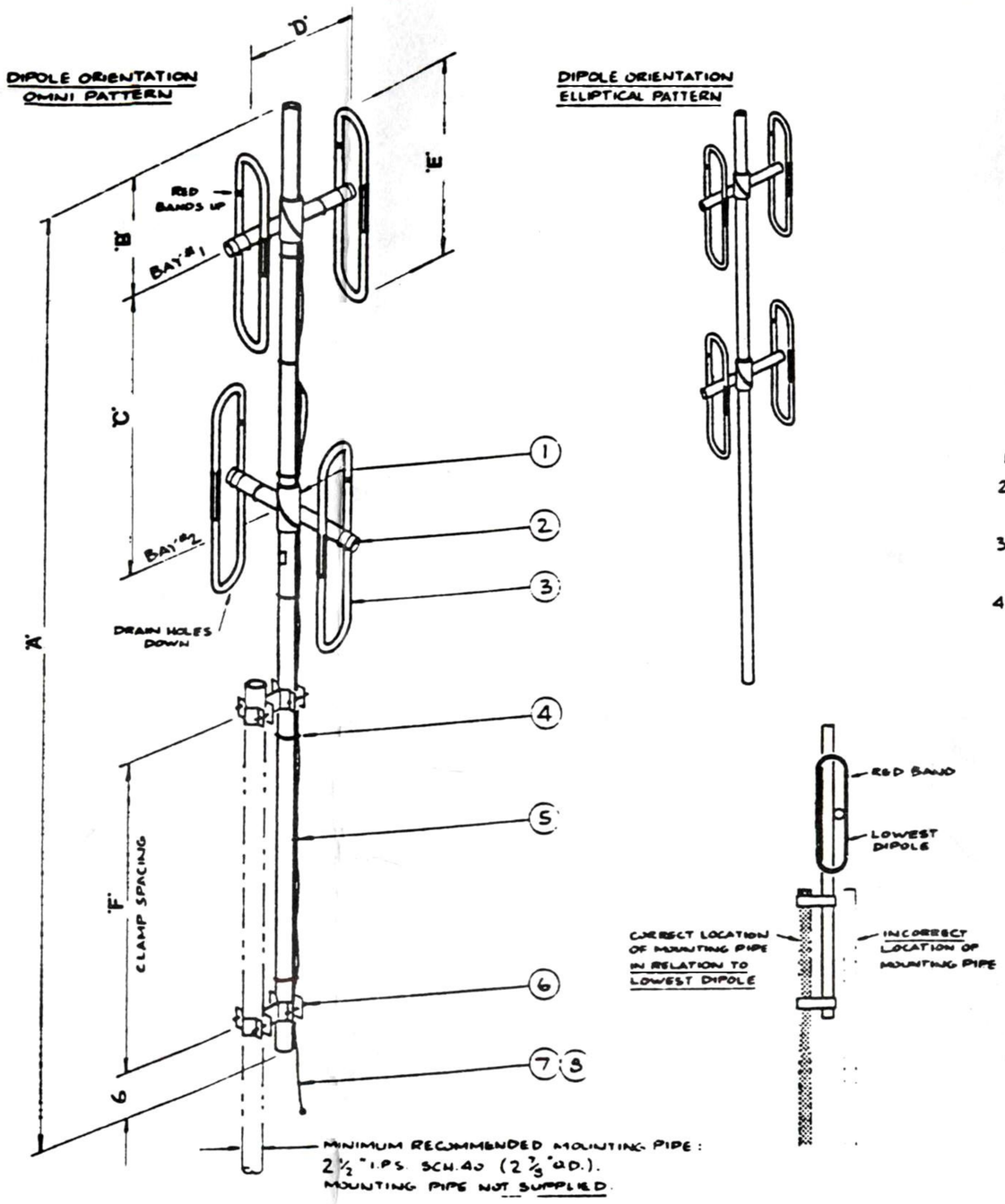

PARTS LIST

ITEM	PART No.	DESCRIPTION	QTY.
1	C-450816	#1 CLAMP ASSEMBLY	2
2	A-247610	BOOM	2
3	A-351740	DIPOLE ASSEMBLY	4
4	#SST-4H00	CABLE STRAP	10
5	A-247601	MAST	1
6	C-450180	#15 CLAMP ASSEMBLY	2
7	A-351739	CABLE HARNESS ASSEMBLY	1
8	A-015768	CONNECTOR WEATHERPROOFING WPK-1	1

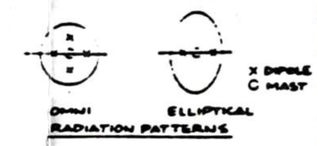

ASSEMBLY PROCEDURE

1. DETERMINE PATTERN DESIRED (OMNI OR ELLIPTICAL)
2. ASSEMBLE BOOMS (2) TO MAST (5) USING #1 CLAMPS (1). (REFER TO DIMENSIONS 'B' & 'C' IN CHART.) BOOMS & MAST ARE MARKED TO INDICATE CORRECT LOCATIONS.
3. ATTACH DIPOLES (3) TO BOOMS. RED BANDS UP, DRAIN HOLES DOWN. (REFER TO DIMENSION 'D' IN CHART).
4. SECURE HARNESS (7) TO MAST USING STRAPS (4). CONNECT HARNESS & DIPOLES. WEATHER PROOF ALL CONNECTIONS USING WPK-1 (8) AS PER DRAWING A-000200.

PART NO.	FREQ. (MHz.)	A	B	C	D	E	F
B-015773-1	108 - 138	192	35	82	36¼	43	60
-2	138 - 174	168	30	64	28½	34⅝	48

DESIGN COND. _____ MPH _____ ICE HORIZONTAL THRUST _____ LB. BENDING MOMENT _____ FT. LB.

ADDITIONAL DRAWINGS

TIGHTENING TORQUES FOR NON-LUBRICATED STEEL BOLTS

BOLT SIZE	TORQUE	BOLT SIZE	TORQUE	BOLT SIZE	TORQUE
¼-20	5 FT. LB.	⅜-16	20 FT. LB.	⅝-11	85 FT. LB.
5/16-18	11 FT. LB.	½-13	40 FT. LB.	¾-10	110 FT. LB.

The Copyright of this document is reserved by Sinclair Radio Laboratories Limited. This document is issued on the condition that it is not copied, reproduced or disclosed to any other party without the written consent of Sinclair Radio Laboratories Limited.

TITLE

235 ANTENNA CUSTOMER ASSEMBLY

108 - 138 & 138 - 174 MHz.

SINCLAIR
TORONTO · VANCOUVER
MONTREAL · TONAWANDA

DRAWN BY	DATE	SIZE	DRAWING No.	ISSUE
CC	25-9-86	B	015773-(1)	1
CHECKED BY	DATE			
APPROVED BY	DATE			

Form No. 2258

TECHNICAL DATA

Sinclair Radio Laboratories Inc.
675 Ensminger Road, Tonawanda, New York 14150 (716) 874-3682 FAX (716) 874-4007

SINCLAIR