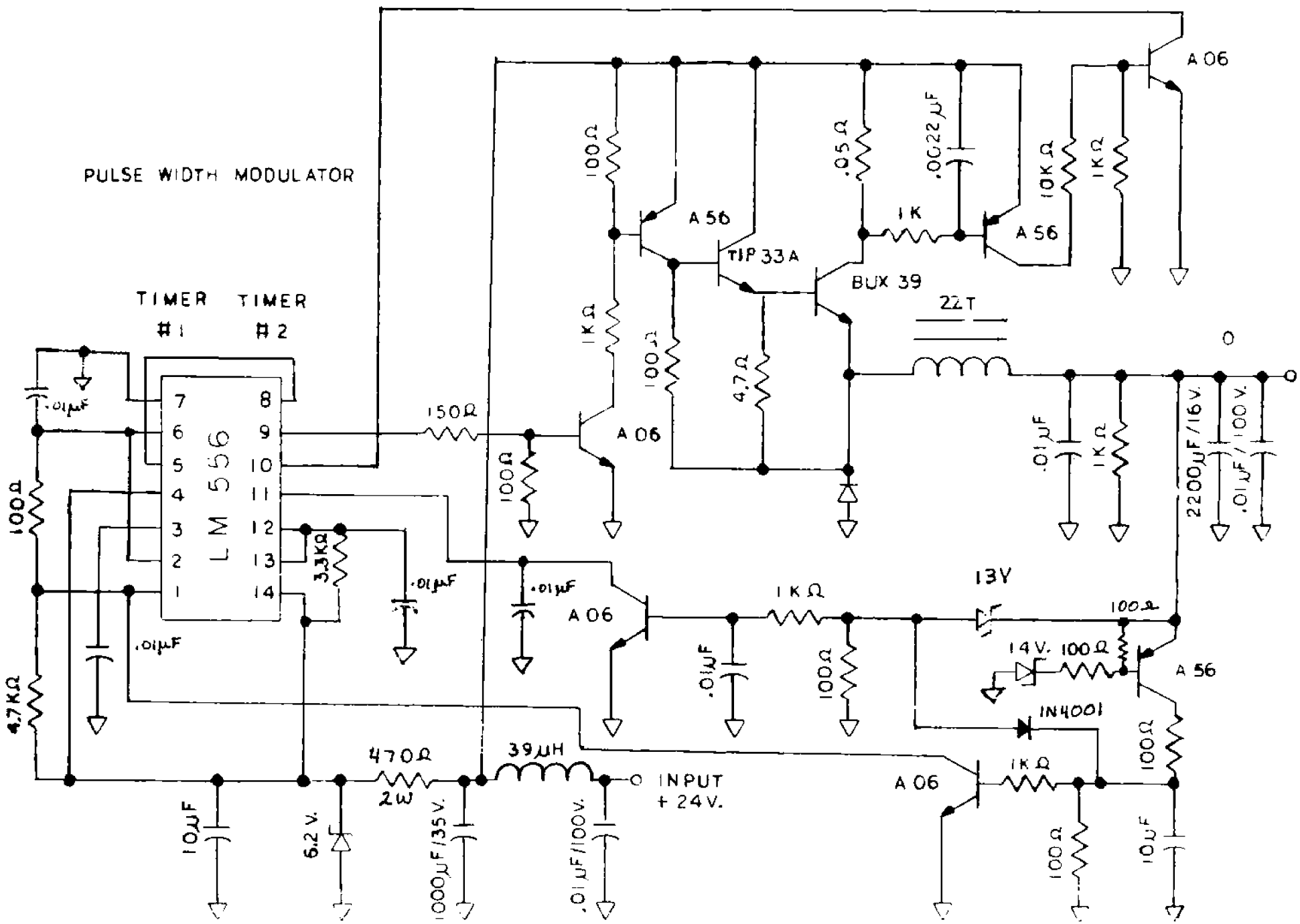
PULSE WIDTH MODULATOR
TIMER #1
TIMER #2
LM 556
7
6
5
4
3
2
1
8
9
10
11
12
13
14
.01μF
100Ω
4.7KΩ
3.3KΩ
150Ω
100Ω
1KΩ
A 06
A 56
TIP 33A
BUX 39
.05Ω
.0022μF
1K
10KΩ
22T
4.7Ω
.01μF
2200μF/16V.
100V.
13V
14V.
IN4001
470Ω
2W
39μH
INPUT
+ 24V.
10μF
6.2V.
1000μF/35V.
.01μF/100V.

Astron 2412