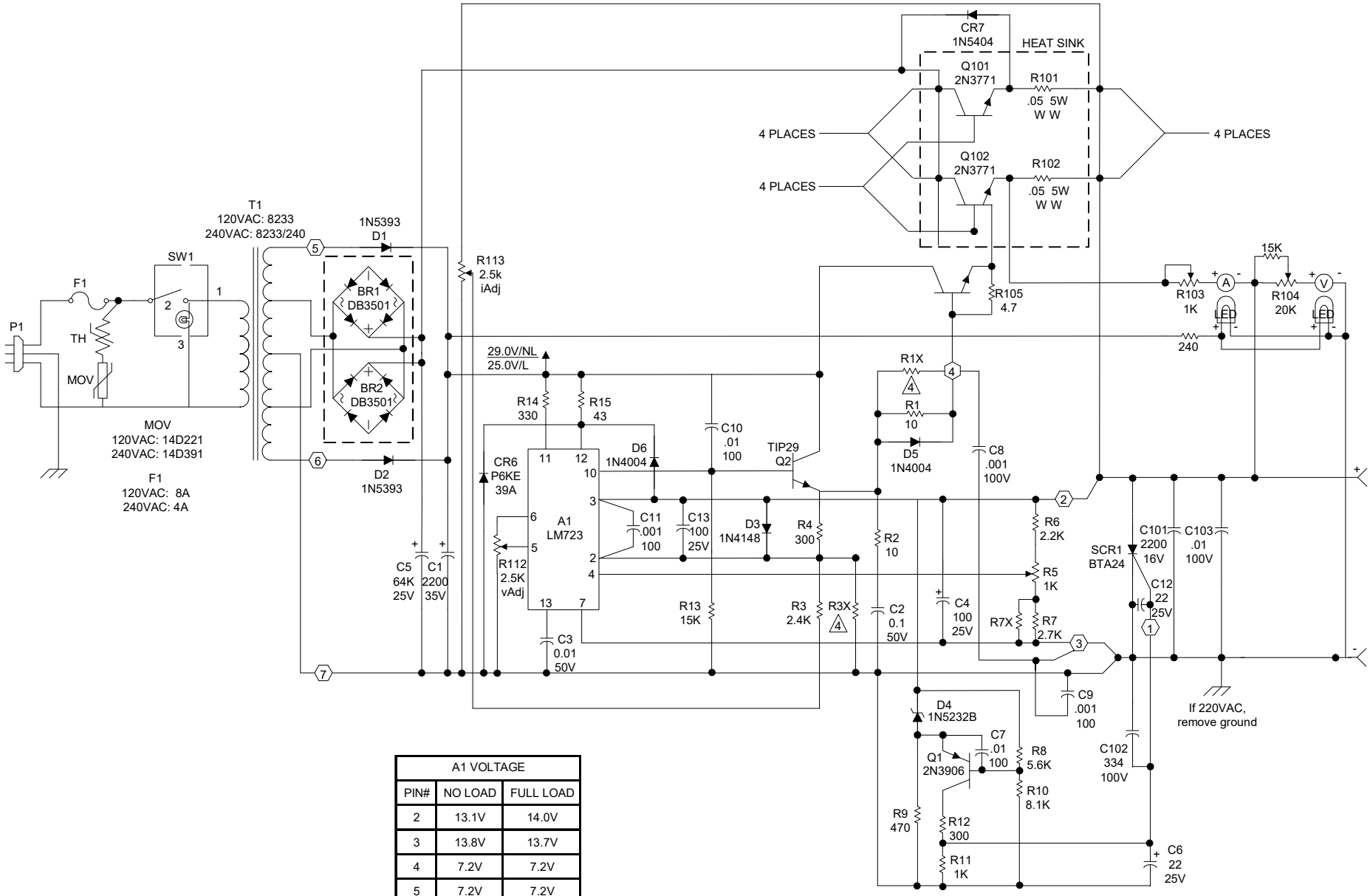

A1 VOLTAGE		
PIN#	NO LOAD	FULL LOAD
2	13.1V	14.0V
3	13.8V	13.7V
4	7.2V	7.2V
5	7.2V	7.2V
6	7.2V	7.2V
7	0.0V	0.0V
10	14.8V	16.5V
11	29.0V	25.0V
12	29.0V	25.0V
13	16.1V	17.8V

UNLESS OTHERWISE NOTED

1. ALL RESISTORS 5%. 0.5W/ C.F. IN OHM.
2. ALL CAPACITORS IN MICROFARADS.
3. ⬡ PRINTED CIRCUIT BOARD.
4. △ TO BE SELECTED IN TEST.

MODEL: VS-35M-AP Rev1 April 2020

ASTRON CORPORATION

IRVINE, CALIFORNIA