UHF FM TRANSCEIVER

TK-830/(B)/(D)

SERVICE MANUAL

KENWOOD

© 1992-3 PRINTED IN JAPAN
B51-8176-00(O)1157

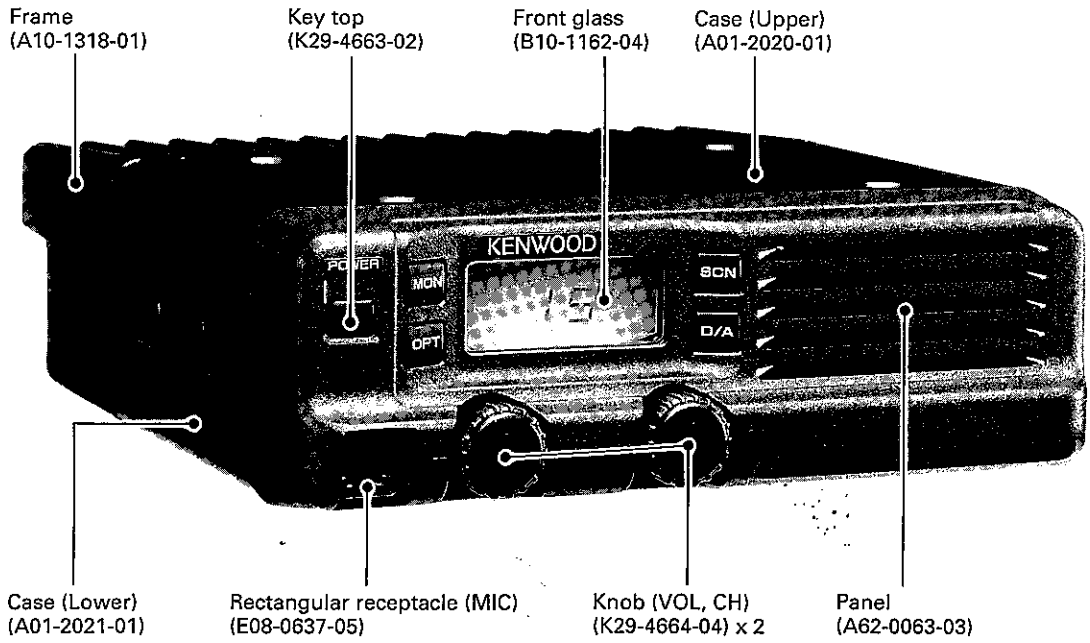

TK-830

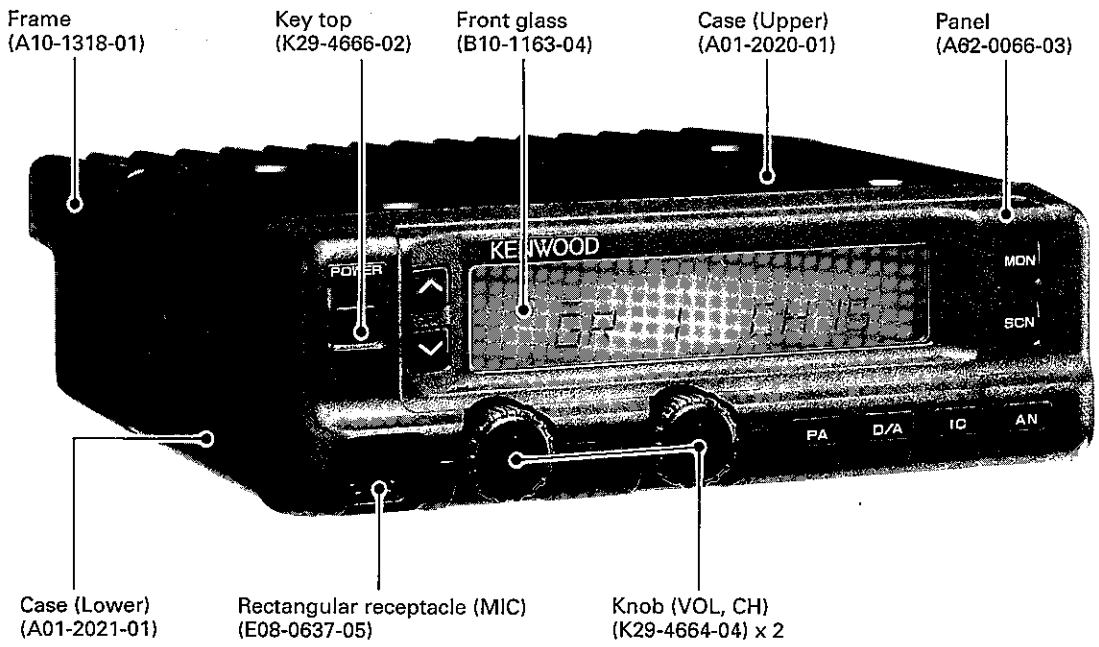

TK-830(D)

CONTENTS

GENERAL 3
SYSTEM SET-UP 5
LIST OF OPTIONAL MODELS 7
ACCESSORY & CONNECTION 8
OPERATING FEATURES
1. SCAN Operating 9
2. Alphanumeric Display 10
3. P.A (Public Address) Function 10
4. T.A (Talk Around) Function 10
5. Time-out Timer Function 10
6. Busy Channel Lockout Function 10
7. Offhook Decode Enable Function 10
8. Dual Head Special Function (When the KRK-3DH is Used) 11
9. Transmit Audio Monitor Function 11
10. Data Writing Method 11
INSTALLATION
1. Front Panel Kit (KCH-3, KCH-4) 13
2. KCH-6 (Optional Knob for the KCH-4) 14
3. Modification for Changing the Microcomputer Backup Time 14
4. Radio Power On/Off Function with the External Fixed Power Supply (Fixed Operation) 15
5. Auxiliary Function 16
6. OPTION (Scrambler) Function 17
7. Operator Selectable Tones/Codes Function 18
8. Ignition Sense Cable (KCT-18) 19
9. External Speaker (KES-4) 20
10. Channel Expansion Kit (KCH-5) 23
11. KXK-2 (TCXO Kit, 12.8MHz ± 2ppm) 24
12. Horn Alert Function 26
DISASSEMBLY FOR REPAIR 26
BLOCK DIAGRAM 31
CIRCUIT DESCRIPTION 33
SEMICONDUCTOR DATA 40
DESCRIPTION OF COMPONENTS 45
PARTS LIST 48
EXPLODED VIEW 65
PACKING 68
ADJUSTMENT 71
TERMINAL FUNCTIONS 76
PC BOARD VIEWS/CIRCUIT DIAGRAMS
DISPLAY UNIT (X54-3100-20) : KCH-3 80
DISPLAY UNIT (X54-3110-20) : KCH-4 83
VCO/PLL UNIT (X58-3800-XX) 86
FIANL UNIT (X57-3740-XX) (D/4) 87
TX-RX UNIT (X57-3740-XX) 90
SCHEMATIC DIAGRAM 97
SPECIFICATIONS 101

GENERAL

INTRODUCTION

SCOPE OF THIS MANUAL

This manual is intended for use by experienced technicians familiar with similar types of commercial grade communications equipment. It contains all required service information for the equipment and is current as of the publication data. Changes which may occur after publication are covered by either Service Bulletins or Manual Revisions. These are issued as required.

ORDERING REPLACEMENT PARTS

When ordering replacement parts or equipment information, the full part identification number should be included. This applies to all parts : components, kits, or chassis. If the part number is not known, include the chassis or kit number of which it is a part, and a sufficient description of the required component for proper identification.

PERSONNEL SAFETY

The following precautions are recommended for personnel safety :

- DO NOT transmit if someone is within two feet (0.6 meter) of the antenna.
- DO NOT transmit until all RF connectors are verified secure and any open connectors are properly terminated.
- SHUT OFF and DO NOT operate this equipment near electrical blasting caps or in an explosive atmosphere.
- All equipment should be properly grounded before power-up for safe operation.
- This equipment should be serviced by a qualified technician only.

FCC COMPLIANCE AND TYPE NUMBERS

Type acceptance number	Frequency range	Compliance
ALHTK-830-1	450~470MHz	Parts 22, 74, 90 and 95*
ALHTK-830-2	470~490MHz	Parts 22, 74 and 90
ALHTK-830-3	490~512MHz	Parts 22, 74 and 90
ALHTK-830-4	403~430MHz	Parts 22, 74 and 90

* Notice · · · · · Parts 95 : 16K0F3E (Emission) only

GENERAL

PRE-INSTALLATION CONSIDERATIONS

1. UNPACKING

Unpack the radio from its shipping container and check for accessory items. If any item is missing, please contact KENWOOD immediately.

2. LICENSING REQUIREMENTS

Federal regulations require a station license for each radio installation (mobile or base) be obtained by the equipment owner. The licensee is responsible for ensuring transmitter power, frequency, and deviation are within the limits permitted by the station license.

Transmitter adjustments may be performed only by a licensed technician holding an FCC first, second or general class commercial radiotelephone operator's license. There is no license required to install or operate the radio.

3. PRE-INSTALLATION CHECKOUT

3-1. Introduction

Each radio is adjusted and tested before shipment. However, it is recommended that receiver and transmitter operation be checked for proper operation before installation.

3-2. Testing

The radio should be tested complete with all cabling and accessories as they will be connected in the final installation. Transmitter frequency, deviation, and power output should be checked, as should receiver sensitivity, squelch operation, and audio output. QT equipment operation should be verified.

4. PLANNING THE INSTALLATION

4-1. General

Inspect the vehicle and determine how and where the radio antenna and accessories will be mounted.

Plan cable runs for protection against pinching or crushing wiring, and radio installation to prevent overheating.

4-2. Antenna

The favored location for an antenna is in the center of a large, flat conductive area, usually at the roof center. The trunk lid is preferred, bond the trunk lid and vehicle chassis using ground straps to ensure the lid is at chassis ground.

4-3. Radio

The universal mount bracket allows the radio to be mounted in a variety of ways. Be sure the mounting surface is adequate to support the radio's weight. Allow sufficient space around the radio for air cooling. Position the radio close enough to the vehicle operator to permit easy access to the controls when driving.

4-4. DC Power and wiring

1. This radio may be installed in negative ground electrical systems only. Reverse polarity will cause the cable fuse to blow. Check the vehicle ground polarity before installation to prevent wasted time and effort.
2. Connect the positive power lead directly to the vehicle battery positive terminal. Connecting the Positive lead to any other positive voltage source in the vehicle is not recommended.

CAUTION

If DC power is to be controlled by the vehicle ignition switch, a switching relay should be used to switch the positive power lead. The vehicle ignition switch then controls DC to the relay coil.

---

3. Connect the ground lead directly to the battery negative terminal.
4. The cable provided with the radio is sufficient to handle the maximum radio current demand. If the cable must be extended, be sure the additional wire is sufficient for the current to be carried and length of the added lead.

5. INSTALLATION PLANNING – CONTROL STATIONS

5-1. Antenna system

Control station. The antenna system selection depends on many factors and is beyond the scope of this manual. Your KENWOOD dealer can help you select an antenna system that will best serve your particular needs.

5-2. Radio location

Select a convenient location for your control station radio which is as close as practical to the antenna cable entry point. Secondly, use your system's power supply (which supplies the voltage and current required for your system). Make sure sufficient air can flow around the radio and power supply to allow adequate cooling.

SERVICE

This radio is designed for easy servicing. Refer to the schematic diagrams, printed circuit board views, and alignment procedures contained in this manual.

SYSTEM SET-UP

Before Reading About System Set-up

[The TK-830(B) is a transceiver main unit (without a panel or speaker) that you complete by adding options.]

See the list of options for the options available (page 7). The options are classified into four types according to operation and function.

1. Install the front panel kit (controller) directly on a radio to operate it. (Form : Radio + KCH-3/4)
2. Remotely control one radio with one controller. (Form : Radio + KRK-2 + KCH-3/4 + KCT-12A/B/C)
3. Remotely control two radios with one controller. (Form : Radios (two) + KRK-4DB + KCH-3/4 + KCT-12A/B/C)
4. Remotely control one radio with two controllers. (Form : Radio + KRK-3DH + KCH-3/4 (two) + KCT-12A/B/C (two))

If you use the KCH-4, an external speaker (KES-4) is required because the radio does not contain a speaker. The basic configurations are illustrated in system set-up.

Note : When you modify your radio as described in system set-up, take the following precaution. The rating of pin 7 (SB) of the accessory connector (J4) on the rear of the radio is 13.6V (1A). Insert a 1A fuse if you use the SB pin for external equipment.

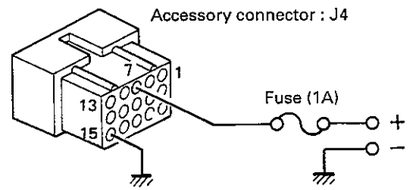

Frequency range	RF power	Type
450~470MHz	35W	TK-830/(B)/(D) F1
470~490MHz	35W	TK-830/(B)/(D) F2
490~512MHz	35W	TK-830/(B)/(D) F3
403~430MHz	35W	TK-830/(B)/(D) F4

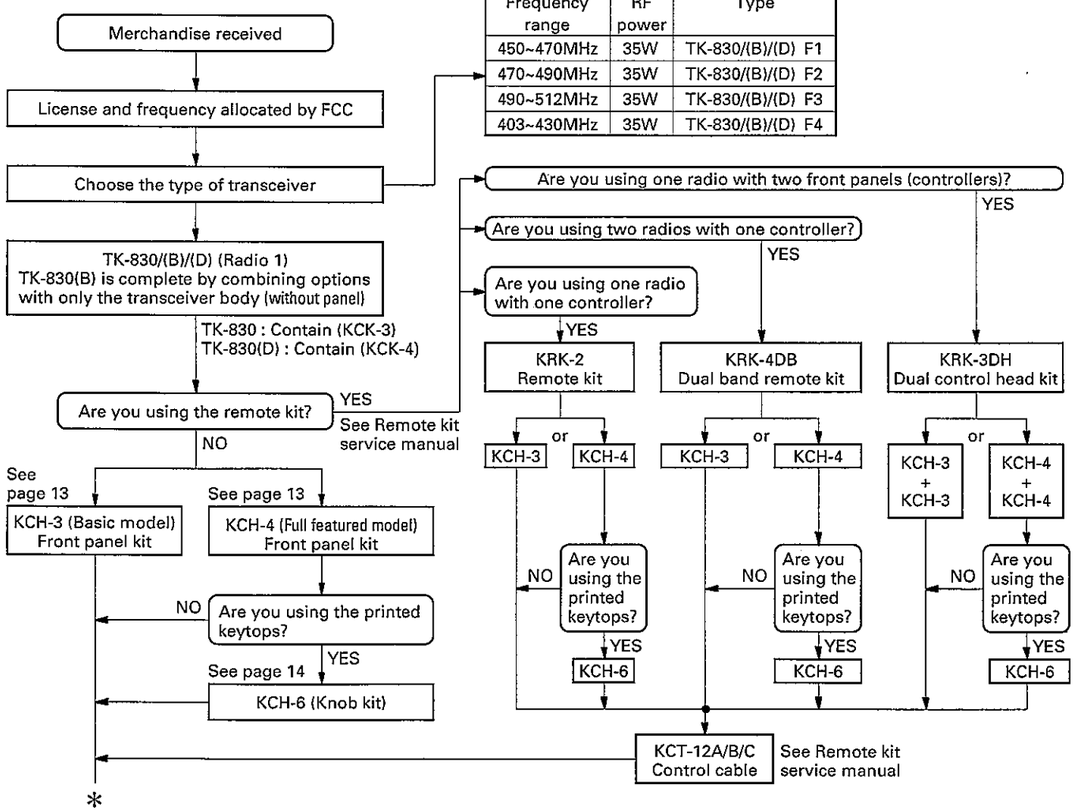

Table showing combinations of dual bands

Radio 1 / Radio 2	TK-830 series	TK-730 series	TK-630H(B)
TK-830 series	X	○	○
TK-730 series	○	X	○
TK-630H(B)	○	○	X

○ : Can be combined, X : Cannot be combined

TK-830/(B)/(D)

SYSTEM SET-UP

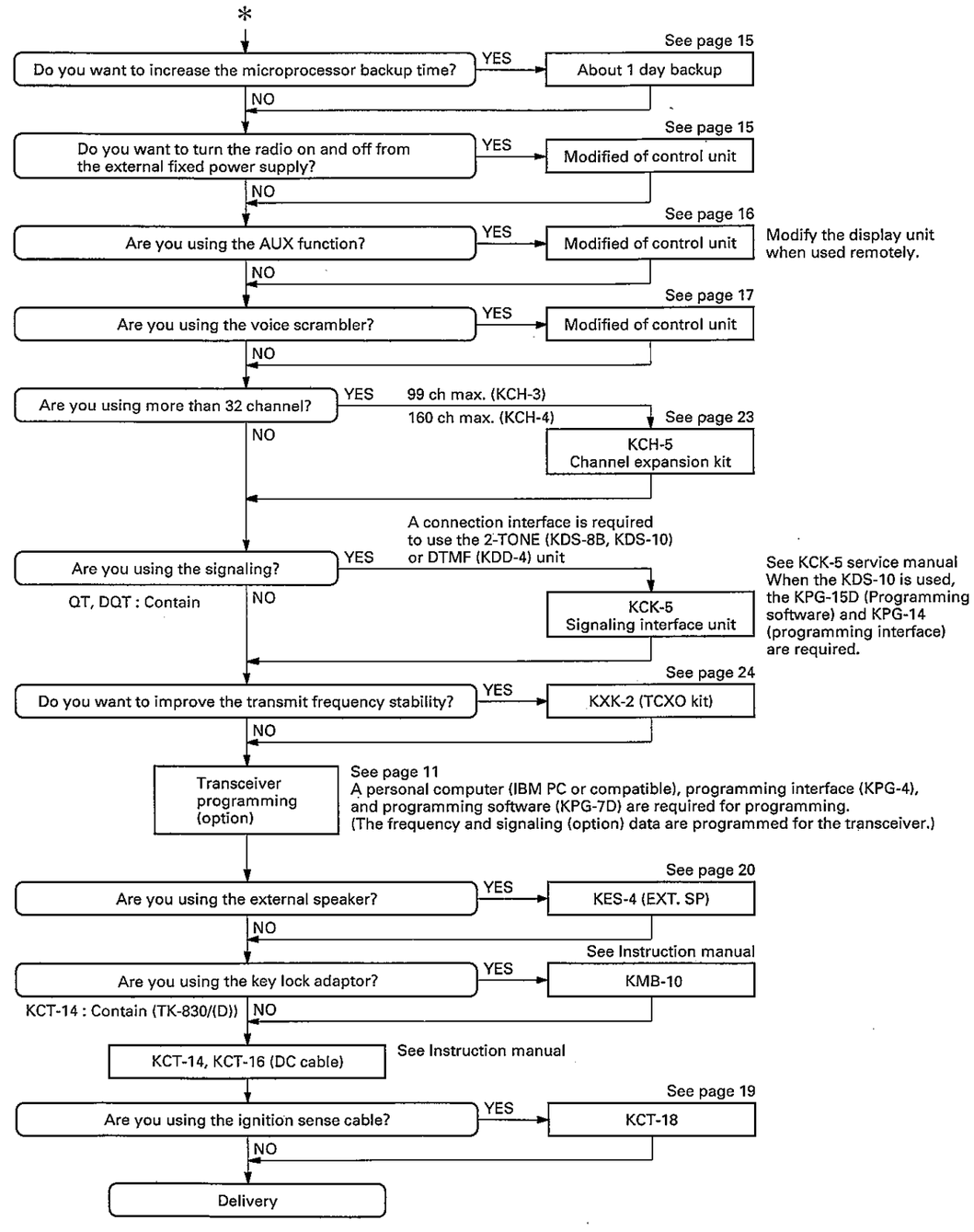

LIST OF OPTIONAL MODELS

Model	Function description	Remarks
KCH-3	The front panel kit (controller) contains a speaker (5W/8Ω), and can display up to 99 alphanumeric characters if a KCH-5 is installed (normally, it displays 32 channels). The channel display and alphanumeric display show two characters. Contain (TK-830)	See page 13
KCH-4	The front panel kit (controller) can display up to 160 channels if a KCH-5 is installed (normally, it displays 32 channels). It has a large LCD that can display 12 alphanumeric characters. It does not contain a speaker. Contain (TK-830(D))	See page 13
KRK-2	This single-control remote kit has a removable front panel.	See Remote kit KRK-2/KRK-3DH KRK-4DB
KRK-3DH	This dual-control head kit allows one radio to be controlled by two front panel kits (controllers).	
KRK-4DB	This dual-band remote kit allows tow radios (1 and 2) to be controlled by one front panel kit (controller). It allows two-band dual priority scan.	
KCH-6	KCH-4 keytop set. One set contains 10 keytops (PA, TA, HA, AN, IC, D/A, OPT, AUX, SP, and blank).	See page 14
KCH-5	Channel expansion kit (two EEPROMs : X24C16PI). When a basic controller (KCH-3) is used, the maximum number of channels is increased from 32 to 99. When a full-function controller (KCH-4) is used, the maximum number of channels is increased from 32 to 160.	See page 23
KCK-5	The signaling interface unit for connecting the 2-TONE (KDS-8B or KDS-10) or DTMF (KDD-4) unit is installed in the radio control unit. The externally connected equipment can be switched on and off by energizing and deenergizing the relay in the KCK-5 by the signaling output.	See KCK-5
KCT-18	The sense cable (10.5 feet) is used to turn the radio on and off with the ignition key.	See page 19
KES-4	The external speaker has a maximum input of 20W/4Ω.	See page 20
KCT-12A /12B/12C	The control cable is used to connect the radio and the control head when the radio is used as a remote mount. KCT-12A : 8 feet, KCT-12B : 17 feet, KCT-12C : 25 feet	See Remote kit
KCT-14/16	KCT-14 : DC cable (10 feet) for TK-830/730 series, (mid-power) system dash mounting. KCT-16 : DC cable (23 feet; ground side : 3.3 feet) for TK-830/730 series, (mid-power) system remote mounting. KCT-4 : Contain (TK-830/(D))	See Instruction manual
KDS-8B	2-TONE decoder. The tone frequency can be in the range 288 to 1433Hz.	See KCK-5
KDD-4	Code memory (EEPROM). (DTMF decoder)	See KCK-5
KDS-10	2-TONE frequency memory (EEPROM). The tone frequency can be set in the range 282.2 to 3487.0Hz in 0.1Hz steps.	See KDS-10
KPG-15D	Programming disk used to program the KDS-10 (2-TONE decoder).	See KDS-10
KPG-14	Programming interface used for the KDS-10.	See KDS-10
KXK-2	TCXO kit (12.8MHz ± 2ppm). Replace it with X302 of the radio TX-RX unit. This kit cannot be used for the TK-630H(B).	See page 24
KMB-10	Key-lock mount can be installed on the KMB-5 mounting bracket for the medium-power model to prevent unauthorized removal.	See Instruction manual

Service Manual Parts List

Model	Parts No.
KRK-2/KRK-3DH/KRK-4DB	B51-8154-00
KCK-5	B51-8155-00
KDS-10	B51-8156-00

ACCESSORY & CONNECTION

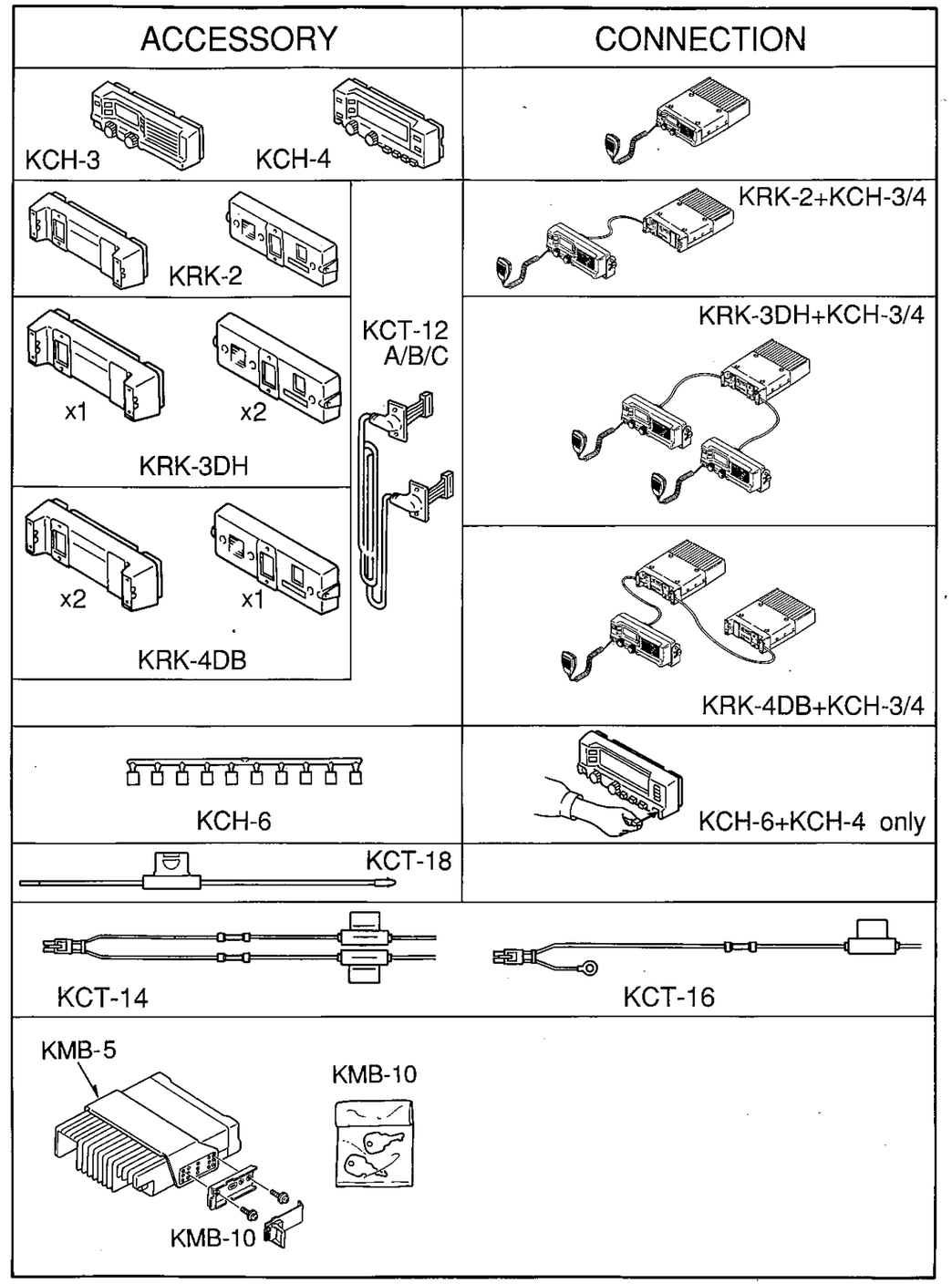

OPERATING FEATURES

1. Scan Operating

1-1. Scan types according to operation section (control head: KCH-3/4)

1. When you use the KCH-3 (basic), you can scan all the channels that can be selected with the channel selector.
2. When you use the KCH-4 (full featured), you can select one of the following two scan types using the programming software (KPG-7D).

2-1. Single group scan : You can scan all the channels in the displayed group that can be selected with the channel selector.

2-2. Multi-group scan : You can scan all the channels that can be selected with the group UP/DOWN key and the channel selector.

1-2. Scan start conditions

One or more non-priority channels must be added to all the channels that can be scanned. The transceiver must be in normal receive mode (PTT off, and microphone onhook). When you press and release the SCAN key, the scan starts. The SCN indicator lights when you use the KCH-3 (basic), and the SCAN indicator lights when you use the KCH-4 (full featured).

1-4. Scan channel types

1. Priority channel 1 is the most important channel for the scan, and always detects a signal during scan and when the scan stops temporarily.
2. Priority channel 2 is the next most important channel for the scan, and always detects a signal during scan and when the scan stops temporarily at a channel other than priority channel 1.
3. Non-priority channels detect a signal during scan. For the channels that can be selected with the group or channel selector when the scan does not occur, ▼ (CH ADD) lights for the KCH-3 (basic), and ▼ (GR ADD) and ▼ (CH ADD) light for the KCH-4 (full featured).

1-5. Priority channel setting

Priority channels 1 and 2 can be set as follows with the programming software (KPG-7D) :

1. Specify priority channels 1 and 2 as fixed priority channels.
2. Make selected channels priority channels.
3. Operator selectable; specify the initial channel before the operator changes it.

1-6. Scan types according to the number of priority channels

1. When no priority channels are set : Only the non-priority channels are scanned. If a non-priority channel stops temporarily, it stops until there is no signal on that channel.
2. When one priority channel is set : Either priority channel 1 or 2 is scanned. If a non-priority channel stops temporarily, a priority channel signal is detected at certain intervals. If a priority channel stops temporarily, it stops until there is no signal on the priority channel.
3. When two priority channels are set : The non-priority channel, priority channel 1 and 2 are scanned. If a non-priority channel stops temporarily, priority channel 1 and 2 signals are detected at certain intervals. If priority channel 2 stops temporarily, the priority channel 1 signal is detected at certain intervals. If priority channel 1 stops temporarily, it stops until there is no signal on priority channel 1.

1-7. Offhook revert channel

The offhook revert channel stops the scan temporarily by shifting the channel when the transceiver user sets the microphone offhook to transmit during scanning, or when the scan stops temporarily. It can be selected by the programming software (KPG-7D).

1. Priority 1 *
2. Priority 2 *
3. Selected channel : Channel displayed immediately before you operate the SCAN switch under the above scan start conditions.
4. Last-used channel : Channel at which the transceiver user pressed PTT just before he set the transceiver offhook.
5. Last call channel : Channel at which the user canceled the AF mute, except beep and alert, just before he set the transceiver offhook.

* If priority channel 1 or 2 is not set by the programming software (KPG-7D) or if the transceiver user deletes (the ▼ indicator lights), the channel shifts to the selected channel, last- used channel, or last call channel, and stops temporarily.

OPERATING FEATURES

1-8. Scan end

If you press and release the SCAN key when the SCN or SCAN indicator is on and the transceiver is not transmitting, the scan ends, the SCN or SCAN indicator goes off, and the transceiver switches to the selected channel automatically.

2. Alphanumeric Display

The programming software (KPG-7D) enables you to set the alphanumeric display (2 digits for the KCH-3 ; 12 digits for the KCH-4) as shown in Figure 1.

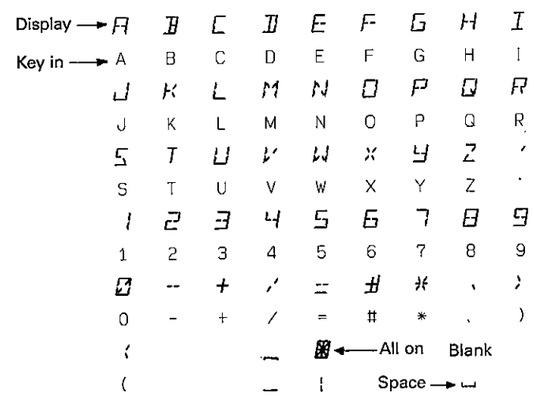

Fig. 1

3. P.A (Public Address) Function

Available for a transceiver to which an optional public address speaker (KES-4) is connected via the accessory connector (J4).

The public address function amplifies the voice input from the microphone with a BTL-type audio amplifier with a 13W (4Ω) rated output, and outputs it from the public address speaker. The transceiver does not enter the transmit mode when this is done.

When you press and release the key set as the P.A switch by the programming software (KPG-7D), the KCH-3 (basic) shows P.A, and the KCH-4 (full featured) shows PUBLIC␣ADRS␣, and the transceiver becomes ready to output your voice from the speaker. If you press PTT and talk into the microphone, your voice is output from the speaker. The volume of the public address speaker can be adjusted with the AF VR of the operation section (control head) that controls the PTT.

If dual band is used with the KRK-4DB (dual-band remote kit), the voice signal is output from the accessory connector (J4) of radio 1.

4. T.A (Talk Around) Function

The talk around function enables you to talk with the other party directly without using a repeater on the channel that has a repeater. This function makes the transmit frequency and signaling equal to the receive transmit frequency and signaling, and transmits data.

When you press and release the key set as the T.A switch by the programming software (KPG-7D), the TA indicator lights and the talk around function is enabled.

5. Time-out Timer Function

You can select 15 to 225 seconds (15-second units) or set this function off with the programming software (KPG-7D).

If you do not set the function off, and the time from the transceiver entering the transmit mode to returning to the receive mode exceeds the preset time, the transmission ends and a warning tone is output. The warning tone sounds until you release PTT.

When you release PTT, the timer is cleared.

6. Busy Channel Lockout Function

You can set this function on and off with the programming software (KPG-7D).

If you set it on, and there is no signaling or a signaling- unmatched signal is input in receive mode on the channel for which receive signaling is set, you cannot enter the transmit mode even if you press PTT, and a warning tone is output until you release PTT.

This function does not work while the MON indicator is lit.

7. Offhook Decode Enable Function

You can set this function on and off with the programming software (KPG-7D).

If you set it off, you cannot cancel signaling during offhook. This function only cancels signaling, and does not affect the offhook revert channel during scanning.

OPERATING FEATURES

8. Dual Head Special Function (When the KRK-3DH is Used)

See the KRK-3DH service manual for the assembly method.

8-1. Intercom function

The intercom function enables you to make conversation between control head 1 and control head 2. The transceiver does not enter the transmit mode when you use this function. You can talk in simplex mode.

When you press and release the key set as the IC (intercom) key by the programming software (KPG-7D), the KCH-3 (basic) shows IC, and the KCH-4 (full featured) shows ␣ INTERCOM ␣␣␣ to indicate that you can talk. If you press PTT and talk into the microphone, your voice is output from the speaker of the other control head. The speaker volume can be adjusted with the AF VR on the other operation section (panel).

9. Transmit Audio Monitor Function

You can set this function on and off with the programming software (KPG-7D).

If you set it off, and you press PTT on control head 1 or 2, your voice is transmitted when you talk into the microphone, but it is not output from the speaker of control head 2 or 1 to prevent howling.

If you set it on, your voice is transmitted and output from the speaker of the other control head. The contents of the transmission are heard, and you can understand what is being said.

10. Data Writing Method

10-1. PC programming method

- **Preparation (TK-830(B) only)**

Install optional front panel kit KCH-3 or KCH-4 (see Installation 1), and do as follows :
KCK-3 : Contain (TK-830), KCK-4 : Contain (TK-830(D).

- **Preface**

The TK-830/(B)/(D) transceiver is programmed by using a personal computer, programming interface (KPG-4), and programming software (KPG-7D).

The programming software can be used with an IBM PC or compatible. Figure 2 shows the setup of an IBM PC for programming.

- **KPG-4 description (P.C. programming interface cable : Option)**

The KPG-4 is required to interface the TK-830/(B)/(D) to the computer. It has a circuit in its D-subconnector (25 pin) case that converts the RS-232C logic level to the TTL level.

The KPG-4 connects the front panel modular microphone connector of the TK-830/(B)/(D) to the computer RS-232C serial port.

- **Programming software description**

The KPG-7D is the programming software for the TK-830/(B)/(D) supplied on a 5.25" and 3.5" floppy disk.

This software runs under MS-DOS (Version 3.1 or later) on an IBM-PC/XT, AT, or PS2, or compatible. Data can be input to or read from the TK-830/(B)/(D) and edited on the screen, and programmed data can be printed.

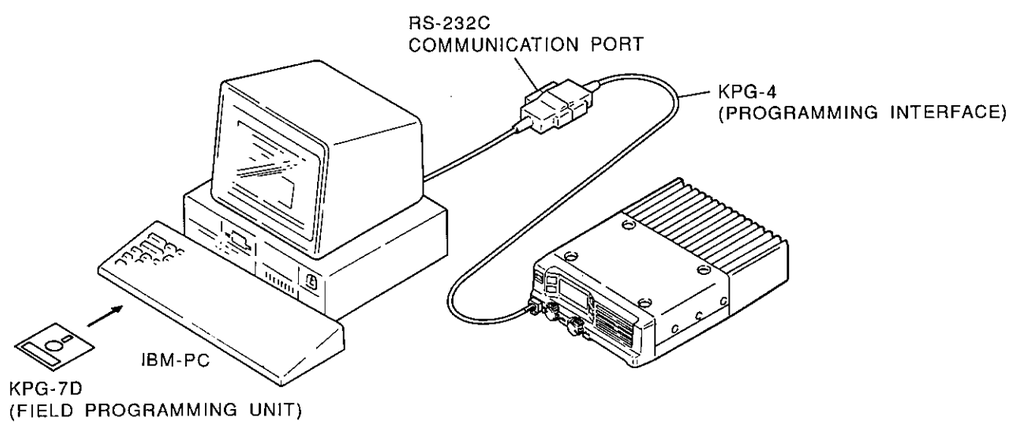

Fig. 2

OPERATING FEATURES

- **Program mode**

After you finish preparatory, you can write data into the EEPROM of the radio (TK-830/(B)/(D)).

The KCH-3 can associate the optional functions with the four switches (MON, SCN, OPT (KEY1), and D/A (KEY2)) using the PC program.

The KCH-4 can associate the optional functions with the six switches (MON, SCN, KEY1 to KEY4).

For example, you can assign a function to KEY1 as follows when you assign functions to the KCH-3/4 switches (MON, SCN, KEY1 to KEY4) :

Note : See page 13 for the LCD readout and error messages.

1. Hold down the KEY1 key (until "PG" (basic) or "PROGRAM" (full featured) appears), and switch the radio on. (See Figure 3-a and 3-b.)
2. "PG" (KCH-3) or "PROGRAM" (KCH-4) appears on the display. Release the KEY1 key.
3. Transfer the data stored in the PC. The data is written into the EEPROM of the radio.

Notes :
If dual control is used (KRK-3DH is used), use the HEADER of HEAD1. ("TO CONTROL HEAD1" is shown on the rear of the KRK-3DH.)
If dual band is used (KRK-4DB is used), supply power to radios 1 and 2.

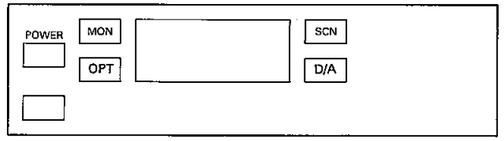

Fig. 3-a KCH-3 (basic) functions

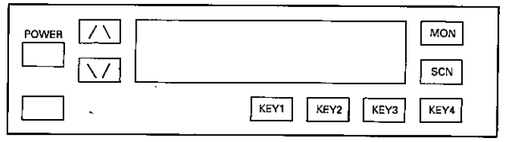

Fig. 3-b KCH-4 (full) functions

10-2. Writing by the clone function

Programming data can be transferred from one radio to another by connecting them at their microphone connectors. (The two radios must be of the same model to use this function.) The operation is as follows (the transmit radio is the master unit and the receive radio is a slave unit) :

1. Hold down the KEY1 key (until "PG" (KCH-3) or "PROGRAM" (KCH-4) appears), and switch the master and slave units on. (See Figure 3-a and 3-b.)
2. Connect the master and slave units with a microphone cable. (See Figure 4.)
3. Hold down the MON key on the master unit. Hold it down until "CL" (KCH-3) or "CLONE" (KCH-4) appears on the display.
4. Press the SCN key.
5. The display shows "MAX → 3 → 2 → 1 → EN" (KCH-3) or "MAX → 3K → 2K → 1K → END" (KCH-4). When EN or END appears, writing is complete.

Notes :
See page 13 for the LCD read out and error messages.
If dual control is used (KRK-3DH is used), use the HEADER of HEAD1 for cloning. ("TO CONTROL HEAD1" is shown on the rear of the KRK-3DH.)

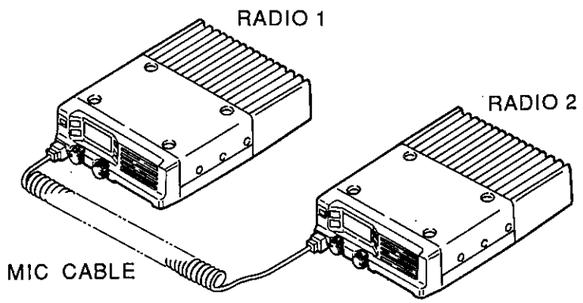

Fig. 4

OPERATING FEATURES/INSTALLATION

10-3. LCD readout examples (program mode)

Status	When KCH-3 is used	When KCH-4 is used
Program mode readout	PG	_PROGRAM__
Clone master unit readout	CL	__CLONE___
Data transfer readout (remaining quantity readout)	20 _1	_WAIT__32K_ _WAIT___1K_
Data transfer start readout	EX	_EXECUTION_
Data transfer end readout	EN	___END____
Error message (*1)	ER	__ERROR__
Error message (*2)	E1	CH_OFFLINE_
Error message (*3)	E2	_MISMATCH__
Error message (*4)	E3	CAN'T_WRITE_

Readout examples in program mode

- **Description of error messages (*2, *3, and *4 are displayed only on the master unit during cloning.)**

*1 : ER (ERROR)
PC programming error readout
Slave unit error readout during cloning

*2 : E1 (CH ␣ OFFLINE)
Master unit error readout during cloning ; The data line is not connected. (Cable connector error, broken cable, etc.)

*3 : E2 (␣ MISMATCH)
Master unit error readout during cloning ; The model name is different.

*4 : E3 (CAN'T ␣ WRITE)
Master unit error readout during cloning ; Cannot write due to a cause not given by 2 and 3 (defective EEPROM, etc.)

1. Front Panel Kit (KCH-3, KCH-4)

1-1. Connection with TK-830(B)

1. Remove the upper and lower halves of the case of the TK-830(B). (Remove the four screws from the upper half and the four screws from the lower half.)
2. Connect the lead (W105) with a connector of the control unit (X57-3740 A/4) to CN2 of the KCH-3 or KCH-4.
3. Install the KCH-3 or KCH-4 on the radio using the screws (N32-3006-46) (❶) supplied with the front panel kit. Take care not to get the lead between the KCH-3 or KCH-4 and an edge of the case. (You can install the panel upside down if necessary to install the radio.)
4. Reinstall the upper and lower halves of the case.
5. Connection the short plug (P1) for the accessory connector (15-pin, J4) on the rear of the radio.

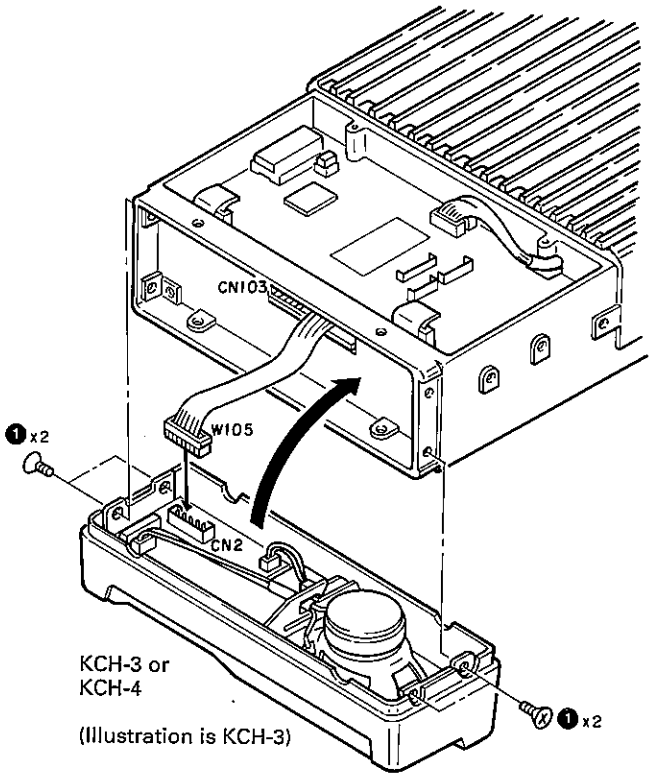

Fig. 1

INSTALLATION

5. Insert the supplied knobs (with no functions printed) or optional KCH-6 (knobs with functions printed) into KEY1 to KEY4 of the KCH-4. Insert the knobs with their dents facing downward. (Fig. 2-a)

Note : To remove a knob, insert a screwdriver into the dent of the knob from underneath. (Fig. 2-b)

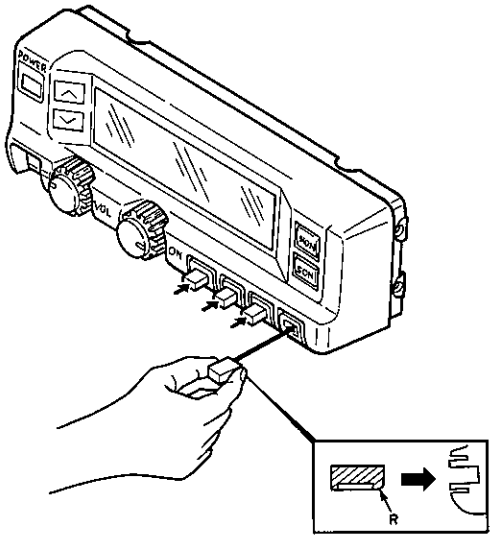

Fig. 2-a Knob insertion

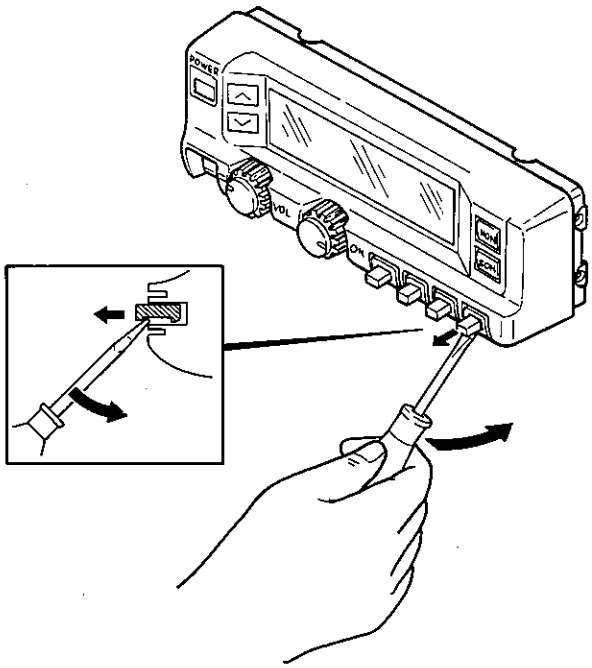

Fig. 2-b Knob removal

1-2. Remote kit connection

See the service manuals for the KRK-2, KRK-3DH, and KRK-4DB.

2. KCH-6 (Optional Knob for the KCH-4)

When a function is set by the programming software (KPG-7D), the key legend can be changed by inserting the KCH-6 knob into KEY1 to KEY4 of the KCH-4. The KCH-6 contains a set of 10 knobs : PA, HA, TA, IC, AN, SP, D/A, OPT, AUX, and blank.

2-1. Installation method

See Item 5 above. (Fig. 2)

3. Modification for Changing the Microcomputer Backup Time

3-1. Mobile operation

When this radio is connected to a car battery, the microcomputer is always backed up. (The RAM contents are retained regardless of whether you turn the radio power switch on or off.) If you disconnect the battery from the radio, the RAM contents disappear in a short time.

3-2. Fixed operation

If the power switch of the fixed power supply connected to the radio is on, the microcomputer is always backed up regardless of whether you turn the radio power switch on or off. If the power switch of the fixed power supply is off, the RAM contents disappear in a short time.

INSTALLATION

3-3. Backup function modification

The minimum backup time when the radio power is off can be changed to one day by making the following modification :

1. Remove the upper half of the radio case.
2. Remove the control unit (X57-3740 A/4) from the chassis.
3. Add C217 to the control unit. (Pay attention to the polarity.) C217 : 0.047F (C90-2079-05)

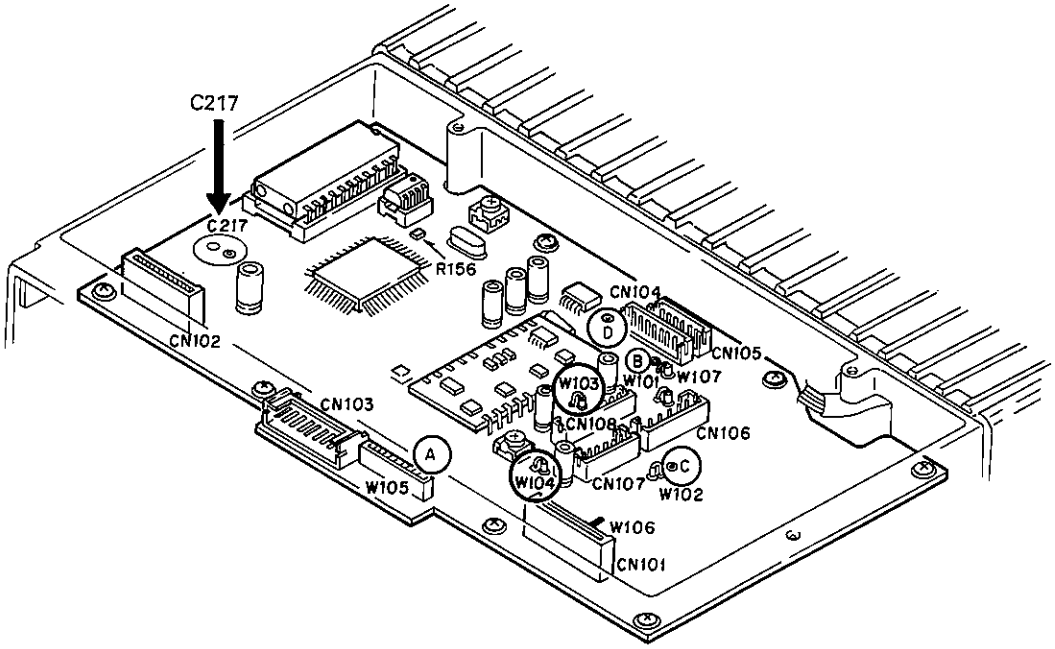

Fig. 3

4. Radio Power On/Off Function with the External Fixed Power Supply (Fixed Operation)

If you modify the radio as follows, the radio power can be turned on by turning on the power switch of the power supply, even if the radio power switch is off. If the radio power switch is turned off, and the power is switched off, then on again immediately, this function does not work ; switch the radio power on.

4-1. Modification method

1. Remove the upper half of the radio case.
2. Remove the control unit (X57-3740 A/4) from the chassis. See the rear of the PC board.
3. Remove R105 (R92-0670-05) from the control unit, and install it on the pattern next to R106.

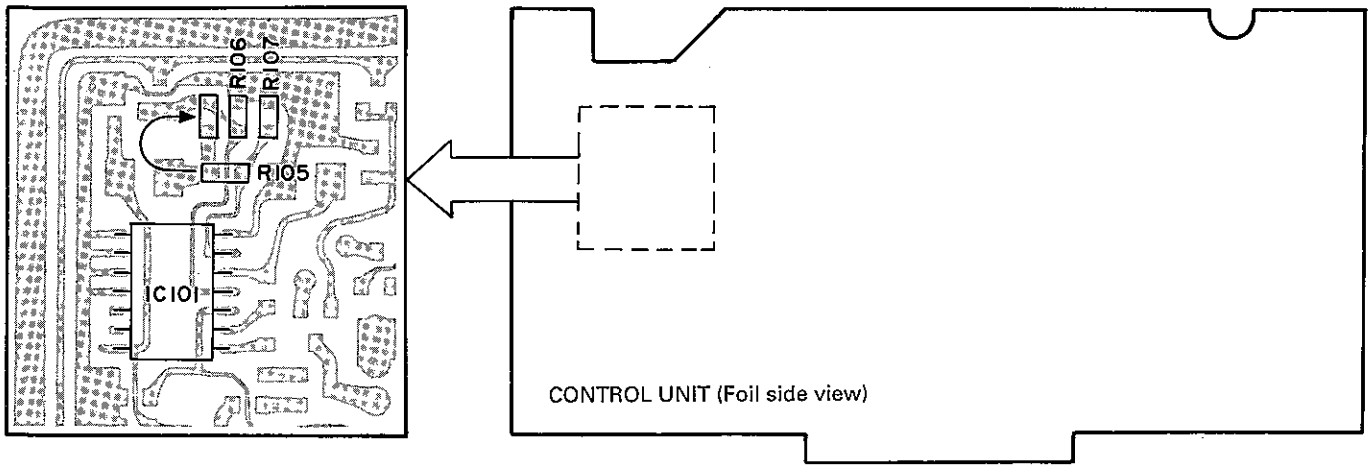

Fig. 4

INSTALLATION

5. Auxiliary Function

The programming software (KPG-7D) enables you to assign an auxiliary function to the AUX key. When you press the AUX key, "•" lights on the KCH-3, and "AUX" lights on the KCH-4, and the auxiliary function turns on.

When you press the AUX key again, "•" or "AUX" goes off, and the auxiliary function turns off. When you set the AUX key on, the display backlight (LED) goes off; when you set the AUX key off, the display backlight (LED) goes on.

The auxiliary function can be assigned to the OPT key using the programming software (KPG-7D). If this is done, "OPT" appears, and the OPT key works like the AUX key.

5-1. Radio modification

The control unit of the radio has a pattern marked with a D, and contains switching transistor Q116, which drives pattern D. The control unit (X57-3740 A/4) IC105 pin 7 goes high when the AUX key is turned on, and low when the AUX key is turned off. So when the AUX key is turned on and off, Q116 output D (max. 100mA) turns on and off. Connect D to a desired port.

5-2. Modification method if remote kit (KRK-2, KRK-3DH, or KRK-4DB) is used

If you use a remote kit and modify it as follows, you can turn pin 3 (AUX) of the accessory connector (6-pin) on the rear of the control head on and off by turning the AUX key on and off. You can use pin 3 to control external equipment.

1. If you use the KCH-3 (basic control head), remove R20 from the display unit (X54-3100 A/2) with a soldering iron. (Fig. 6-a)
2. If you use the KCH-4 (full featured control head), remove R35 from the display unit (X54-3110 A/2) with a soldering iron. (Fig. 6-b)
3. You can control external equipment by connecting it to pin 3 (AUX) of the plug (6-pin : P703/P704) of the accessory connector (6-pin) on the rear of the control head. (Fig. 6-c)

5-3. Backlight on/off function

When you set the auxiliary function, the backlight on/off function is also set. To set the auxiliary function without setting the backlight on/off function, modify the TK-830/(B)/(D) as described in Section 5-2.

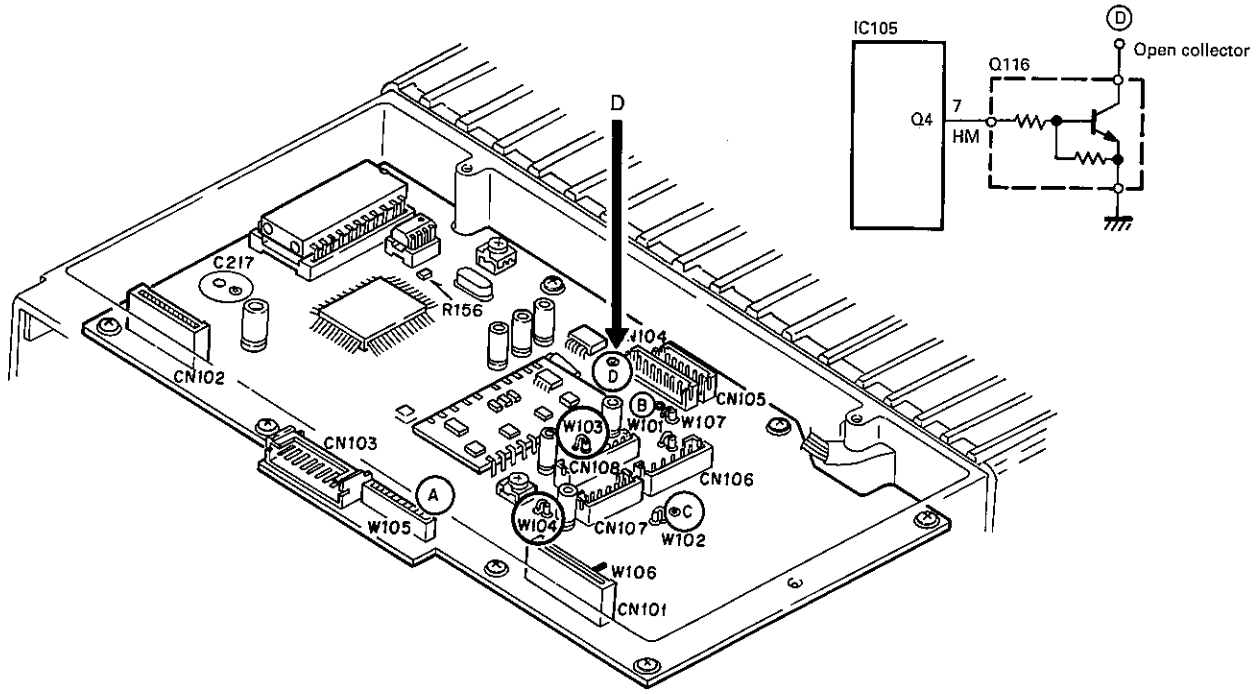

Fig. 5

INSTALLATION

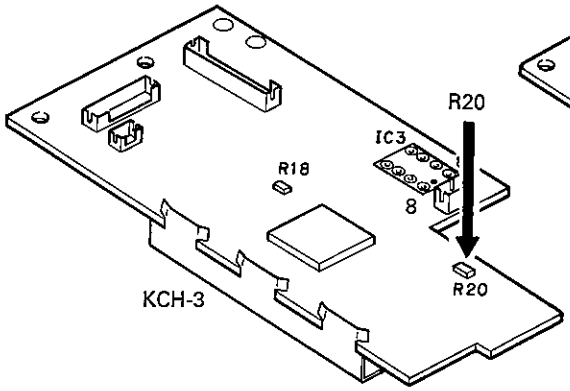

Fig. 6-a

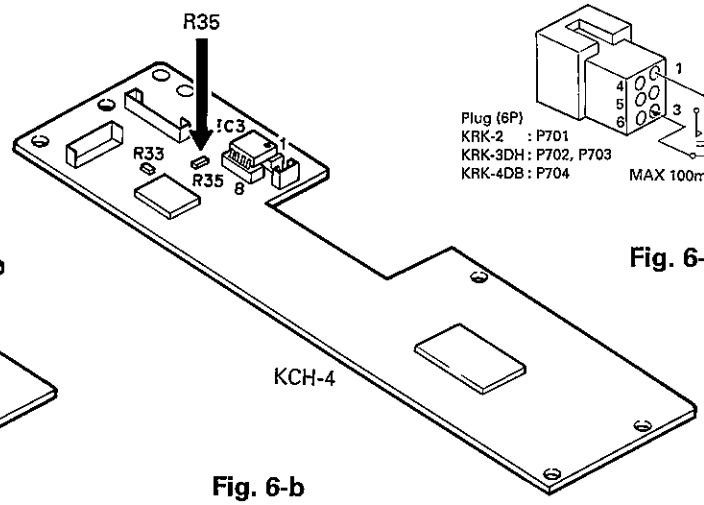

Fig. 6-b

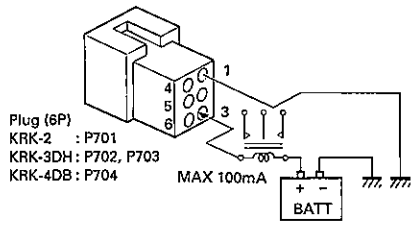

Fig. 6-c

6. OPTION (Scrambler) Function

This function is available when you assign it to the OPT key with the programming software (KPG-7D). When you press the OPT key, the "OPT" indicator lights, and the OPTION (Scrambler) function turns on. When you press the key again, the "OPT" indicator goes off, and the OPTION (Scrambler) function turns off.

The OPTION (Scrambler) function can be assigned to the AUX key using the programming software (KPG-7D). If this is done, "•" (KCH-3), "AUX" (KCH-4) appears, and the AUX key works like the OPT key.

Normally, the OPTION (Scrambler) function operates the port of connector CN108 of the control unit (X57-3740 A/4) as follows :

6-1. AC1 (pin 5)

AC1 is normally high (OPT : Off). When you press the OPT key, AC1 goes low, and the "OPT" indicator lights. When you press the key again, AC1 goes high and the "OPT" indicator goes off.

6-2. Ports 0, 2, 4, and 8 (pins 9 to 12)

Data stored in the RAM is output as the initial data. It is 0000 when the microcomputer is reset.

If you hold down the SCN key and press the OPT key, you enter the code setting mode, and "▮1" to "▮16" (KCH-3) or "CODE1" to "CODE16" (KCH-4) appears on the display. When you set codes, the port output is changed from 1 to 16 by changing the display from 0 to F with the encoder. If you hold down the OPT key again, the code setting mode is terminated, and the set code for the port remain unchanged.

6-3. Voice scrambler connection example

- **Modification method**

1. Remove the upper half of the case of the TK-830/(B)/(D). (Four screws)
2. Cut W103 and W104 of the control unit (X57-3740 A/4).

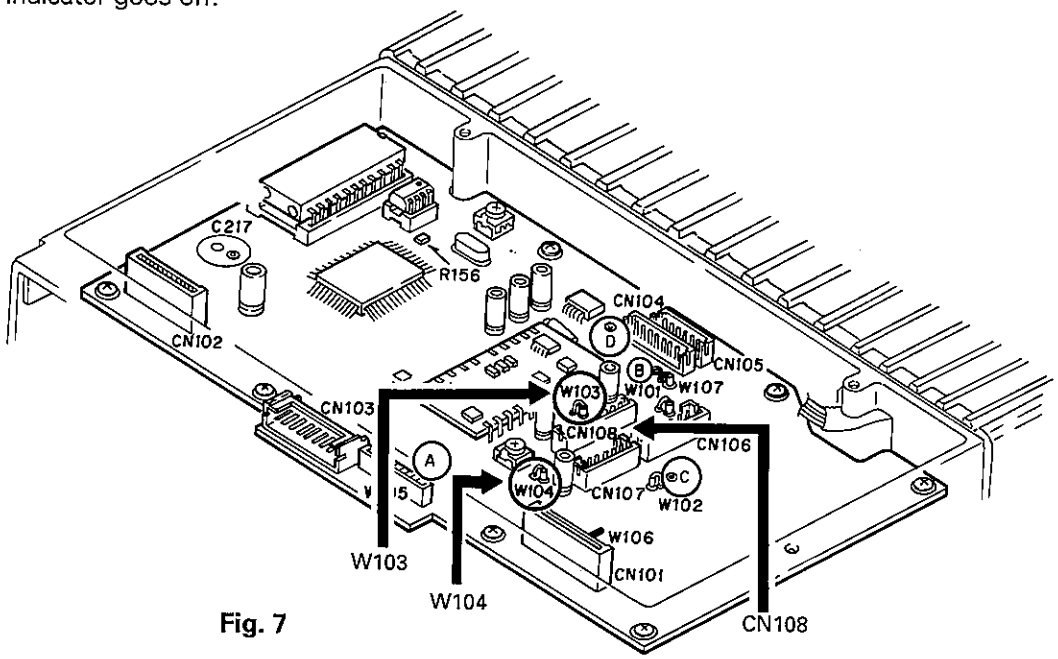

Fig. 7

INSTALLATION

- **Connection method**

Connect control unit (X57-3740 A/4) CN108 and the voice scrambler as follows :

- **Operation method**

1. When you press the OPT key, the scrambler is activated and scrambles. The "OPT" indicator lights.
2. When you press the OPT key again, the scrambler is deactivated and the "OPT" indicator goes off.
3. Set the scrambler code with the encoder as discribed in Section 6-2.

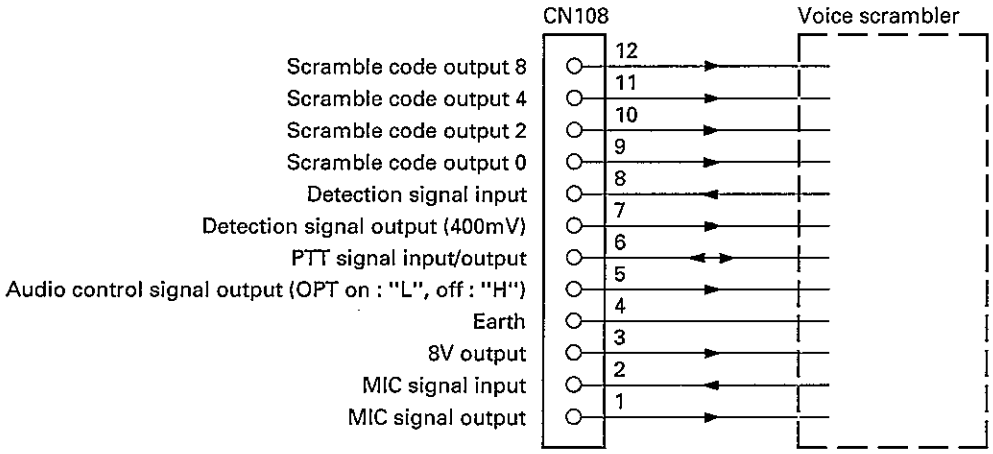

7. Operator Selectable Tones/Codes Function

This function is available when you assign it to the OPT key with the programming software (KPG-7D). When you press the OPT key, the "OPT" indicator lights, and the operator selectable tones/codes function turns on. When you press the key again, the "OPT" indicator goes off, and the operator selectable tones/codes function turns off.

The operator selectable tones/codes function can be assigned to the AUX key using the programming software (KPG-7D). If this done, "•" (KCH-3), "AUX" (KCH-4) appears, and the AUX key works like the OPT key.

7-1. Setting the operator selectable tones/codes

When you assign the operator selectable tones/codes function to the OPT key using the programming software (KPG-7D), you should use the programming software to set a maximum of 16 operator selectable tones/codes in addition to the operator selectable tones/codes for each channel.

Code	Decode	Encode
1	67.0	100.0
2	D023N	D754I
⋮	⋮	⋮
15	D754I	250.3
16	150.7	D023N

7-2. Operation method

1. You can select operator selectable tones/codes from 16 codes as follows to replace the operator selectable tones/codes for each channel.
   Hold down the SCN key and press the OPT key in channel display mode to enter code selection mode. Select from 1 to 16 with the channel selector. The display shows the following :
   KCH-3 : 1 to 16
   KCH-4 : CODE1 to CODE16
   To return to channel display mode, press the OPT key.
2. To use the tone/code selected from the 16 codes, press the OPT key in channel display mode with that code. The signaling of the channel operates as the selected tone/code, and the "OPT" indicator lights. When you press the OPT key again, the "OPT" indicator goes off, and the signaling of the displayed channel returns to the original condition (the signaling set for each channel by the programming software).
3. The operator selectable tones/codes function can be also assigned to the AUX key using the programming software. In this case, the "AUX" indicator lights.

INSTALLATION

8. Ignition Sense Cable (KCT-18)

The KCT-18 is an optional cable used to implement the ignition function. This function allows you to turn the radio power on and off using the ignition key of the car. You can disable the horn alert function during driving with the ignition key. (To use the horn alert function, the optional KCK-5 (interface unit) and KDD-4 (DTMF decoder) or KDS-8B or KDS-10 (two-tone decoder) are required.

8-1. Modification to switch the power on and off with the ignition key

- **When you use the TK-830 series and KCH-3 or KCH-4**

1. Remove the short plug (P1) from the accessory connector (15-pin : J4) on the rear of the radio.
2. Insert the KCT-18 contact into pin 3 (IGN).
3. Remove the upper half of the radio case.
4. Cut W101 of the control unit (X57-3740 A/4) (Fig. 8-c), and reinstall the upper half of the radio case.

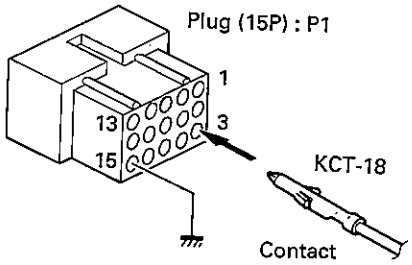

Fig. 8-a

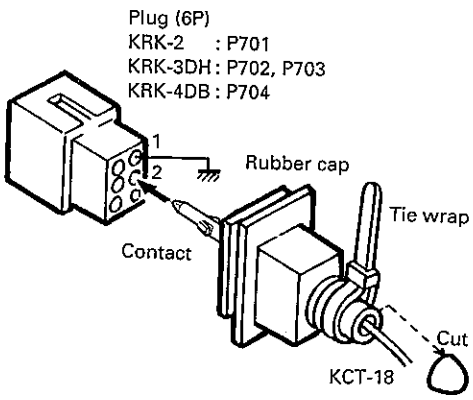

Fig. 8-b

- **When you use the remote kit (KRK-2, KRK-3DH, or KRK-4DB)**

If you use the accessory connector (15-pin : J4) on the rear panel of the radio, use the same procedure as above.

When you use the KRK-4DB, use the 15-pin accessory connector of radio 1.

If you use the accessory connector (6-pin) on the rear of the control head :

1. Remove the short plug from the accessory connector (6-pin) on the rear panel of the control head.
2. Cut off the end of the rubber cap (accessory), insert the KCT-18 into the cap, and insert it into pin 2 (SPR) of the short plug.
3. Install the short plug and rubber cap on the connector on the rear of the control head, then clamp the bottom of the rubber cap with the supplied tie wrap.
4. Remove the upper half of the radio case.
5. Cut W101 of the control unit (X57-3740 A/4). Insert jumpers into lands A and B, and solder them on the rear of the board. (If you use the KRK-4DB, modify only radio 1.)
6. Install the upper half of the radio case.

Note : If you use the KCT-18 with the KRK-4DB, use the 15-pin plug on the rear of radio 1, and the plug (6-pin) on the rear of the control head. You cannot use the 15-pin accessory connector on the rear of radio 2.

8-2. Horn alert function on/off with the ignition key

Modify as described in 8-1 above. Cut W107, not W101.

SEE MANUAL
FOR FURTHER MODS.

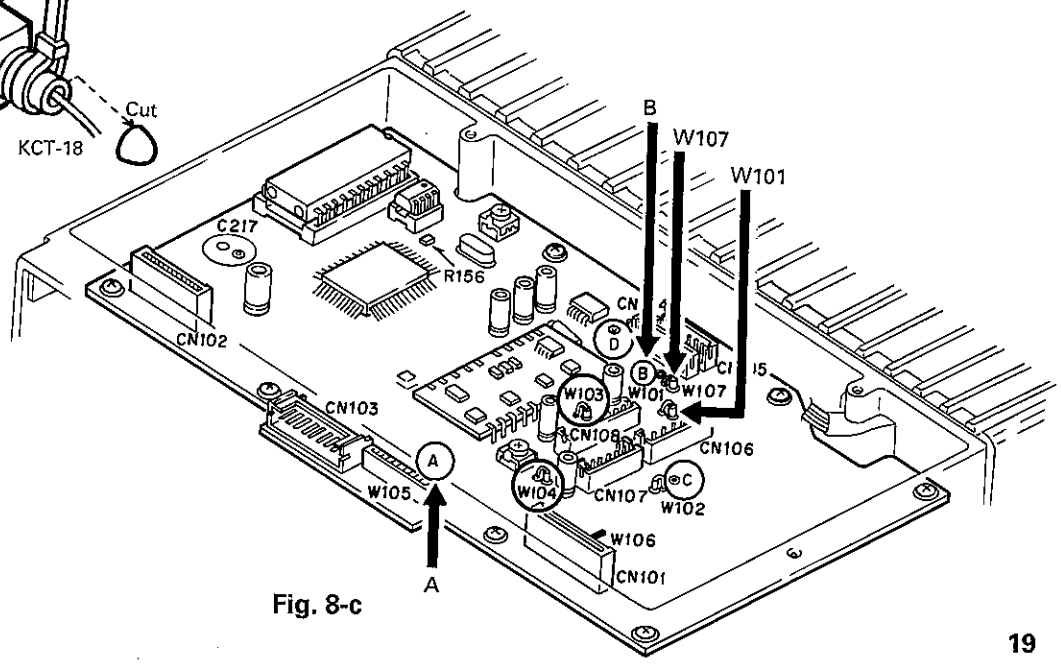

Fig. 8-c

INSTALLATION

9. External Speaker (KES-4)

The TK-830 series speaker output is as follows :

1. The KCH-3 contains a speaker (5W/8Ω).
2. The KCH-4 does not contain a speaker.
3. The external speaker output from the accessory connector (15-pin) on the rear of the radio is 13W/4Ω. Use external speaker KES-4.
4. If you use a remote kit (KRK-2, KRK-3DH, KRK-4DB), the external speaker output from the accessory connector (6-pin) on the rear of the control head is 5W/4Ω. Use external speaker KSP-1A or KES-4. You can use the KSP-1A only when you short pins 9 and 12 of the accessory connector (15-pin) on the rear of the radio and do not increase the speaker output (see page 22).

Note : The TK-830 series does not have a ground because it uses a BTL audio amplifier. Do not connect leads to the ground.

9-1. Connection for the KES-4 with the TK-830 series

- **When taking the AF output from the accessory connector (15-pin) on the rear of the radio**

The following tools are required for changing the connector.

Extracting tool

The following extracting tool is recommended :
Molex Inc. Order No. : 11-03-0002

1. Remove the connector with jumper from the external speaker connector on the rear panel of the radio. (Fig. 9-a)
   Note : Save the jumper, which is required when the radio is used without the external speaker.
2. Remove the terminals with the jumper from the connector housing holes number 9 and 12 using the extracting tool.
   Removing the jumper lead (Fig. 9-b)
   1) Insert the extracting tool (11-03-0002) into the connector while pushing the jumper lead in the direction of (a).
   2) Push the extracting tool into collapse the barbs of the crimp terminal.
   3) Pull out the lead while continuing to push the extracting tool in the direction (b).
3. Reinsert the terminal with the black and white stripe lead into hole number 12, and the terminal with the block lead into hole number 6. (fig. 9-c)
4. Attach the connector to the external speaker connector on the radio.

Note : Relationship between accessory connector (15-pin) connection and speaker output
When pins 9 and 12 are shorted ; The 5W internal speaker is used.
When pins 9 and 12 are open and output is from pins 6 and 12 ; The 20W external speaker (KES-4) is used.

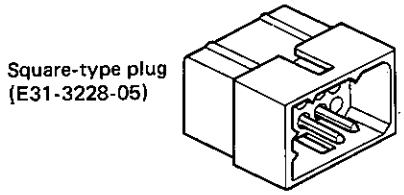

Fig. 9-a

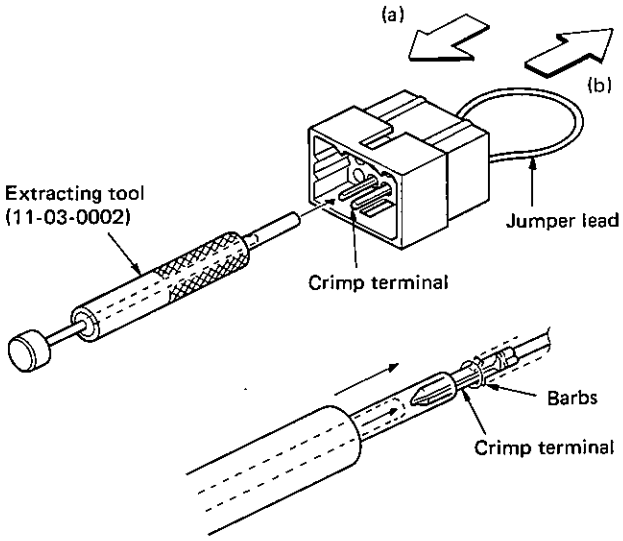

Fig. 9-b

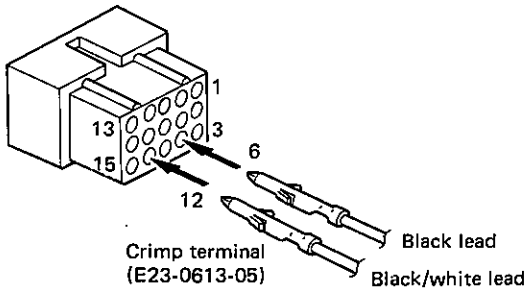

Fig. 9-c

INSTALLATION

9-2. Connection for the KES-4 with the remote kit (KRK-2, KRK-3DH, or KRK-4DB) (When output is from the 6-pin accessory connector on the rear of the control head : remote operation)

- **Modification of plug (6-pin)**

1. Remove the short plug from the accessory connector (6-pin) on the rear of the control head.
2. Remove the cables from pins 4 and 5 with the extracting tool. (Remove them as described in Section 9-1.)
3. Cut off the end of the rubber cap, insert the KES-4 speaker cable into the cap, and insert it into pins 5 and 6.
4. Install the plug and rubber cap on the accessory connector on the rear of the control head, then clamp the bottom of the rubber cap with the supplied tie wrap.

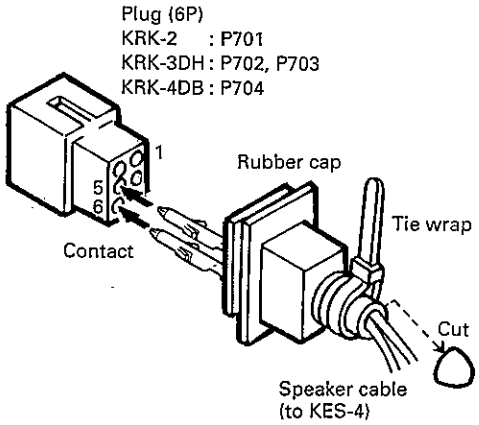

Fig. 10

Notes :

1. Since the output from the accessory connector (6-pin) is 5W, you can use the KSP-1A (speaker).
2. Relationship between accessory connector (6-pin) connection and speaker output
   When pins 4 and 5 are shorted ; The 5W internal speaker is used (KCH-3 only).
   When pins 4 and 5 are open and output is from pins 5 and 6 ; The 5W external speaker is used.

- **Modification of the control unit (X57-3740 A/4)**

Modify the radio connected with a remote kit as follows :

Remove the upper half of the case of the radio, and solder (short) W106 of the control unit. If you do not, the control head speaker output will deteriorate. If the radio is restored to the basic model (the remote kit is removed), open W106, otherwise the maximum head speaker input will be exceeded.

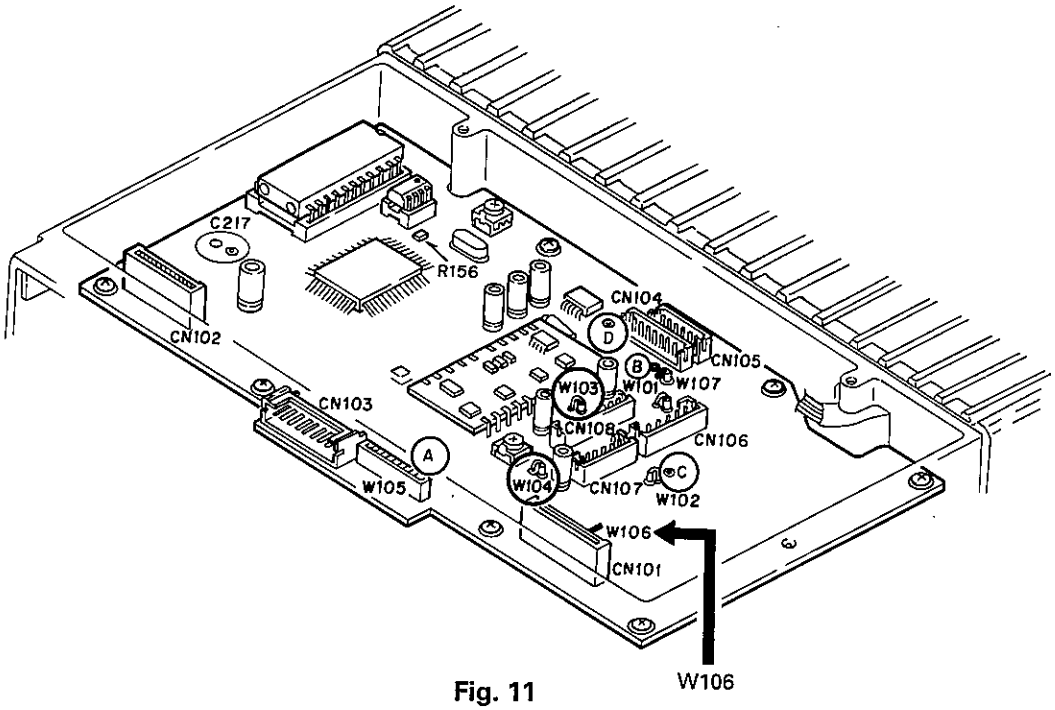

Fig. 11

INSTALLATION

- **Modification to increase the control head speaker output (from 5 to 10W)**

You can increase the speaker output to 10W by shorting W106 of the control unit as described previously, and soldering W10 of the X46-3110-20 (KRK-2), X46-3090-20 (KRK-3DH), or X46-3100-20 (KRK-4DB) of the control head.

In this case, you cannot use the KCH-3 internal speaker because the maximum input of 5W is exceeded, so use the KES-4.

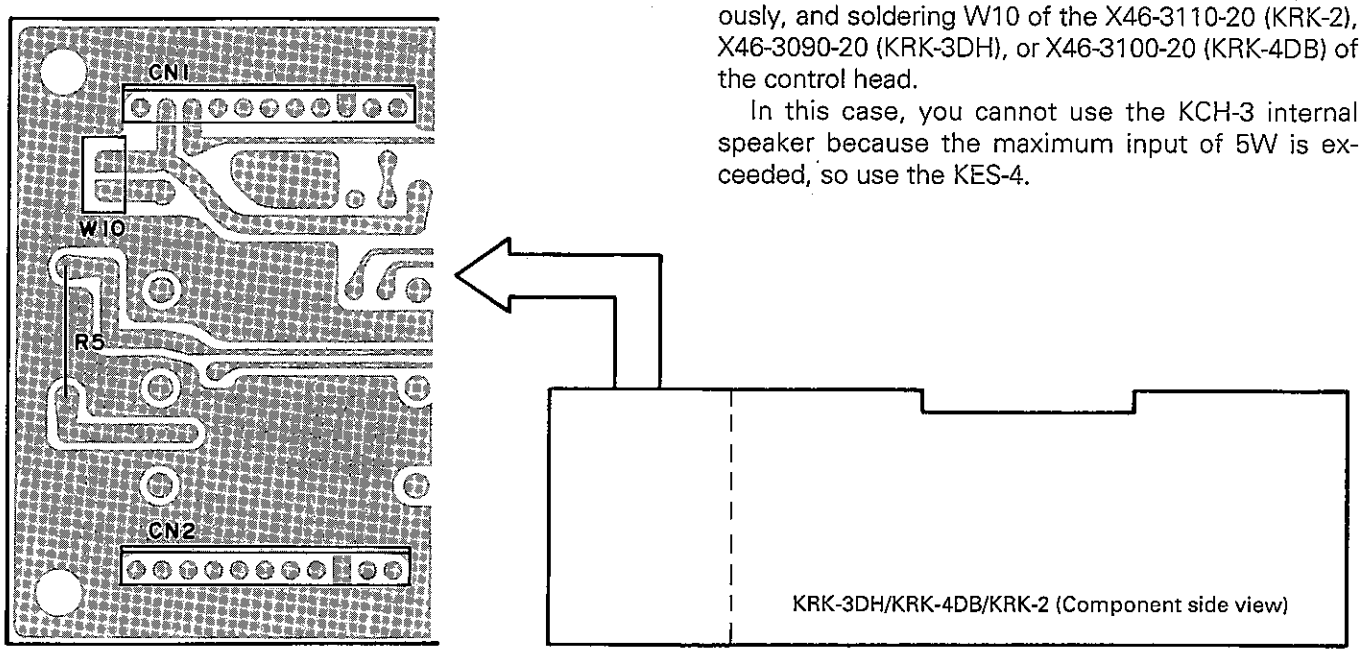

Fig. 12

9-3. Use as public address speaker

1. Remove the short plug (P1) from the 15-pin accessory connector (J4) on the rear of the radio. (Remove the jumpers as described in Section 9-1.)
2. Insert the KES-4 speaker leads into pins 13 and 14 of P1.
3. If you remove jumper shorting pins 9 and 12, the 20W PA (public address) voice signal is output from pins 13 and 14. (Only when the PA or SP switch is on)
4. If you use the radio with pins 9 and 12 shorted, the internal speaker is available (when the KCH-3 is used). The KCH-4 does not contain a speaker.

Note :

Relationship between accessory connector (15-pin) connection and speaker output

When pins 9 and 12 are shorted ; The 5W internal speaker is used (KES-3 only).

When pins 9 and 12 are open and output is from pins 13 and 14 ; The 20W external speaker is used.

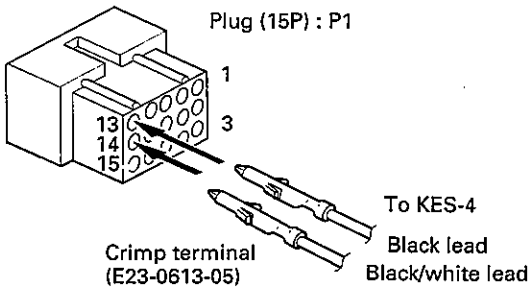

Fig. 13

INSTALLATION

10. Channel Expansion Kit (KCH-5)

This optional kit increases the number of channels and AN (alphanumeric) channels of the radio.

10-1. System configuration

*32B : Basic control head (32 ch)
99B : Basic control head (99 ch)
32A : Basic + Alphanumeric (32 ch)
99A : Basic + Alphanumeric (99 ch)
*32F : Full featured control head (32 ch)
160F : Full featured control head (160 ch)
* : Factory setting

10-2. System modification

- **KCH-3 (basic control head) is used**

1. 99B (basic control head : 99 channels)
   Modify the radio with the basic control head (32 channels) so that it supports a 99-channel display.
   1) Remove the upper half of the radio case.
   2) Remove IC109 from the control unit (X57-3740 A/4) and install the KCH-5 EEPROM (X24C16PI) by soldering. (Fig. 14)
   Note : Install it in the correct direction. Check the mark on the IC (KCH-5), and insert it.
   3) Remove R156 (R92-0670-05) of the control unit. (Fig. 14)
2. 32A (basic + alphanumeric display : 32 channels)
   Modify the radio with the basic control head (32 channels) so that it supports a 32-channel alphanumeric display.
   1) Install the KCH-5 EEPROM in IC3 of the KCH-3 display unit (X54-3100-20 A/2) by soldering.
   Note : Install it in the correct direction. Check the mark on the IC (KCH-5), and insert it. (Fig. 15-a)
   2) Remove R18 (R92-0670-05) of the display unit. (Fig. 15-a)
3. 99A (basic + alphanumeric display : 99 channels)
   Modify the radio with the basic control head (32 channels) so that it supports a 99-channel and alphanumeric display.
   1) Install the KCH-5 EEPROM in the control unit by soldering, and remove R156. Remove R18 of the display unit.

- **KCH-4 (full-feature control head) is used**

1. 160F (Full-featured control head : 160 channels)
   Modify the radio with the basic control head (32 channels) so that it supports a 160-channel and alphanumeric display.
   1) Remove the upper half of the radio case.
   2) Remove IC109 (X24C04PI) of the control unit (X57-3740 A/4) from the socket, and install the KCH-5 (X24C16PI). (Fig. 14)
   Note : Install the IC in the correct direction. Check the mark on the IC (KCH-5), and insert it.
   3) Remove R156 (R92-0670-05) of the control unit. (Fig. 14)
   4) Remove IC3 (X24C04PI) of the KCH-4 display unit (X54-3110-20 A/2) from the socket, and install the KCH-5 (X24C16PI). (Fig. 15-b)
   Note : Install the IC in the correct direction. Check the mark on the IC (KCH-5), and insert it.
   5) Remove R33 (R92-0670-05) of the display unit. (Fig. 15-b)

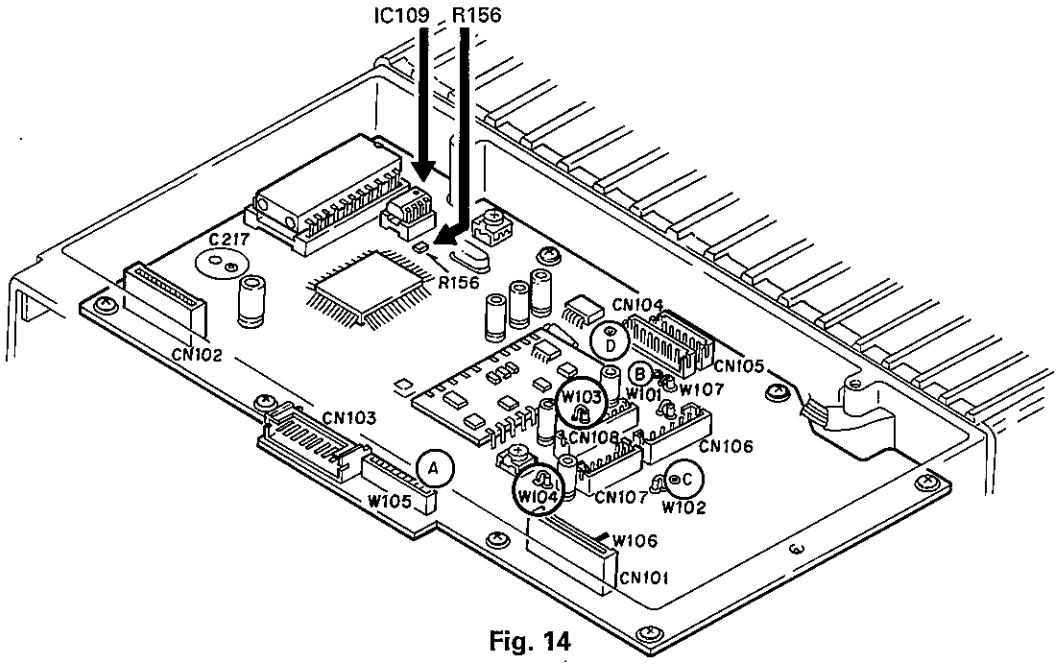

Fig. 14

INSTALLATION

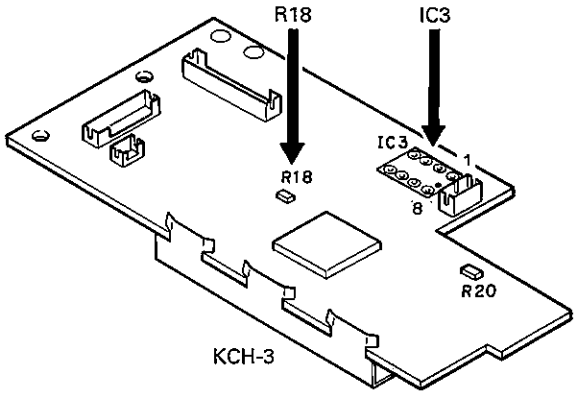

Fig. 15-a

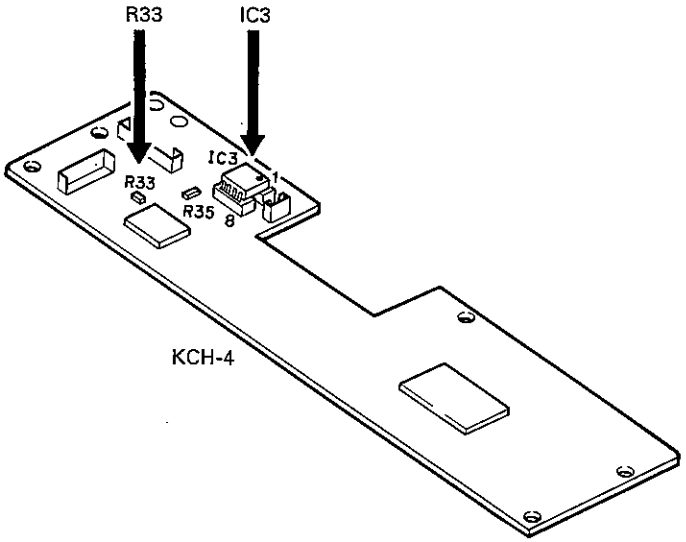

Fig. 15-b

11. KXK-2 (TCXO Kit, 12.8MHz ± 2ppm)

The KXK-2 is an optional temperature-compensated crystal oscillator. If you replace X302 of the TX-RX unit of the radio with the KXK-2, the transmit frequency stability improves.

11-1. Rating

Item	Rating	Condition
Frequency deviation	$\pm 8 \times 10^{-6}$ or more	Input voltage (VC) : 2Vp-p (1Hz to 3kHz) Power supply voltage : 5 V DC
Temperature characteristics	$\pm 2 \times 10^{-6}$ or less, −30 to +70°C	Power supply voltage : ±5 V Load : 1kΩ, 10pF Input voltage (VC) : Based on the rated frequency when off
Power variation characteristics	$\pm 0.2 \times 10^{-6}$ or less	5V DC (±10%)

11-2. Radio modification

1. Remove the lower half of the radio case. (Four screws)
2. Remove the flat cable of CN305 on the TX-RX unit (X57- B/4) from above. Remove coaxial plugs CN301 and CN303, and connector CN304 (❶).
3. Remove the seven screws (❷) holding the TX-RX unit, and remove the TX-RX unit.
4. Remove X302 (L77-1466-05) from the unit with a soldering iron (❸).
5. Insert the KXK-2 into the X302 land from above, solder the four leads (❹), and cut them.

Note : Install the KXK-2 in the correct direction. When installing it, check the adjusting hole position, as shown in the illustration. You do not need to adjust the frequency because it has been factory adjusted.

6. Install the TX-RX unit in the radio by reversing the order of removal.

INSTALLATION

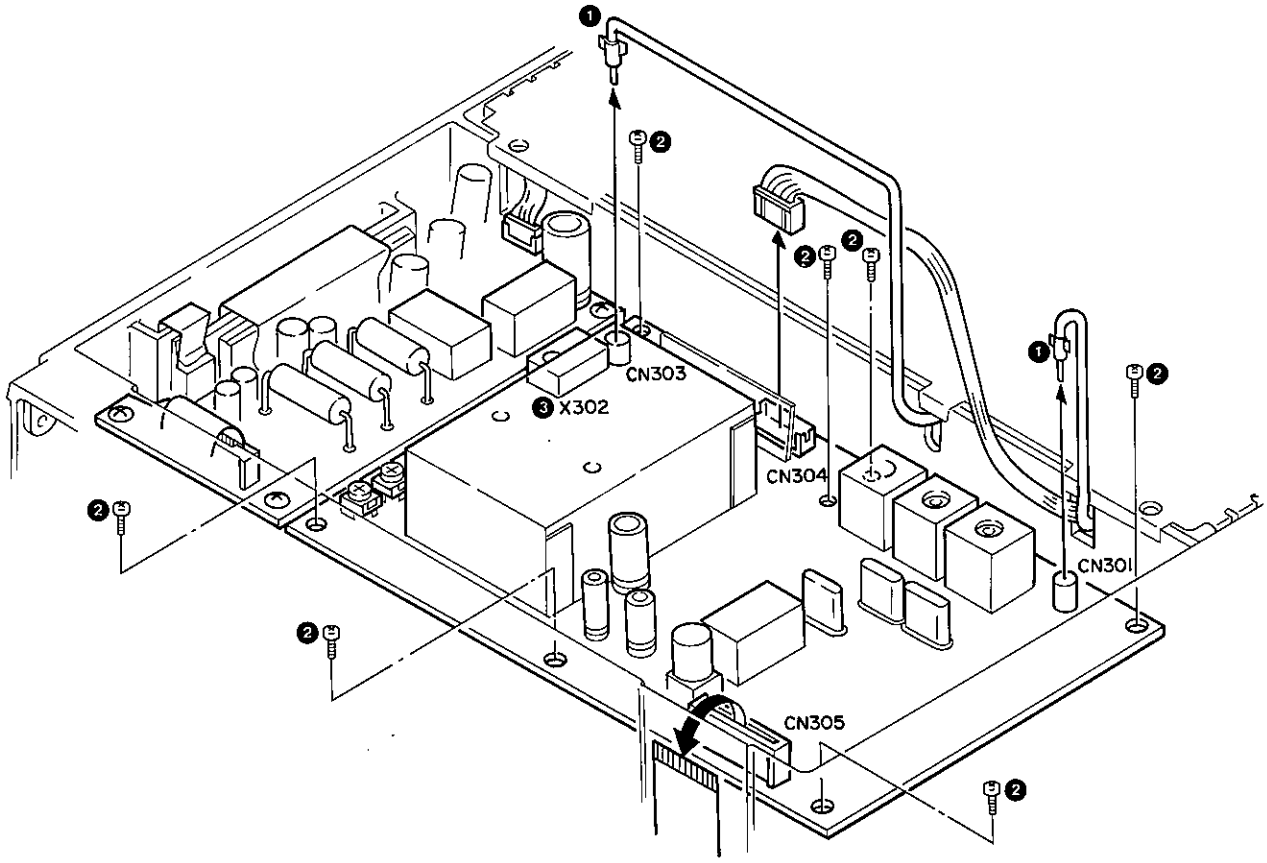

Fig. 16-a

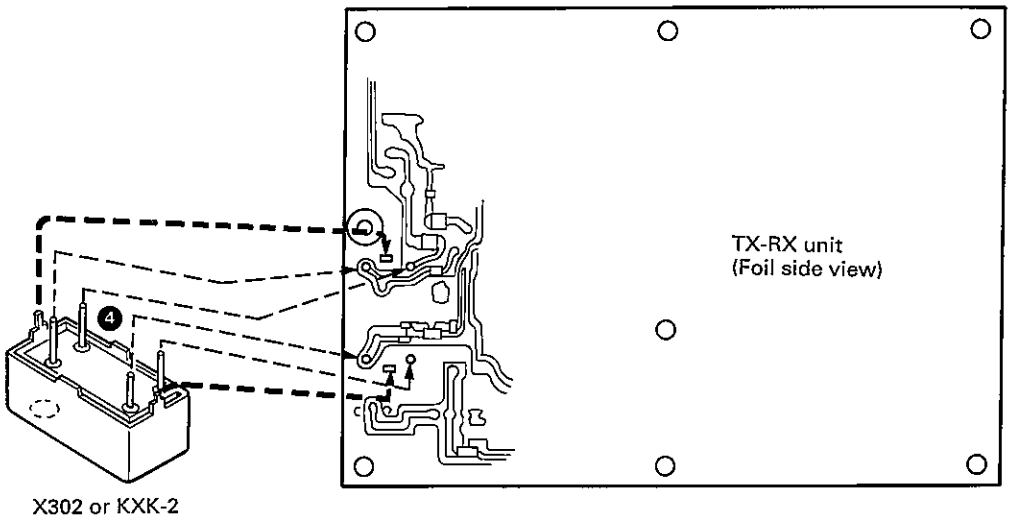

Fig. 16-b

INSTALLATION/DISASSEMBLY FOR REPAIR

12. Horn Alert Function

The horn alert function is available for a transceiver to which the optional KCK-5 (interface kit) and KDD-4 (DTMF decoder), KDS-8B (two-tone decoder), or KDS-10 (two-tone decoder) have been added and for which jumper W107 in the control unit (X57-3740 A/4) has been cut. (For the installation method, see the KCK-5 service manual.)

1. The horn alert function controls external equipment by energizing the relay of the interface unit (KCK-5) for a certain time after the above optional decorder detects matching of the call signal.
2. If you set OTHER SIGNALING to "Y" with the programming software (KPG-7D) for a channel, and you press and release the key set as the H.A key, HA (KCH-3) or ␣HORN␣ALERT (KCH-4) appears on the display, and the radio goes into standby. (The microphone must be onhook.)

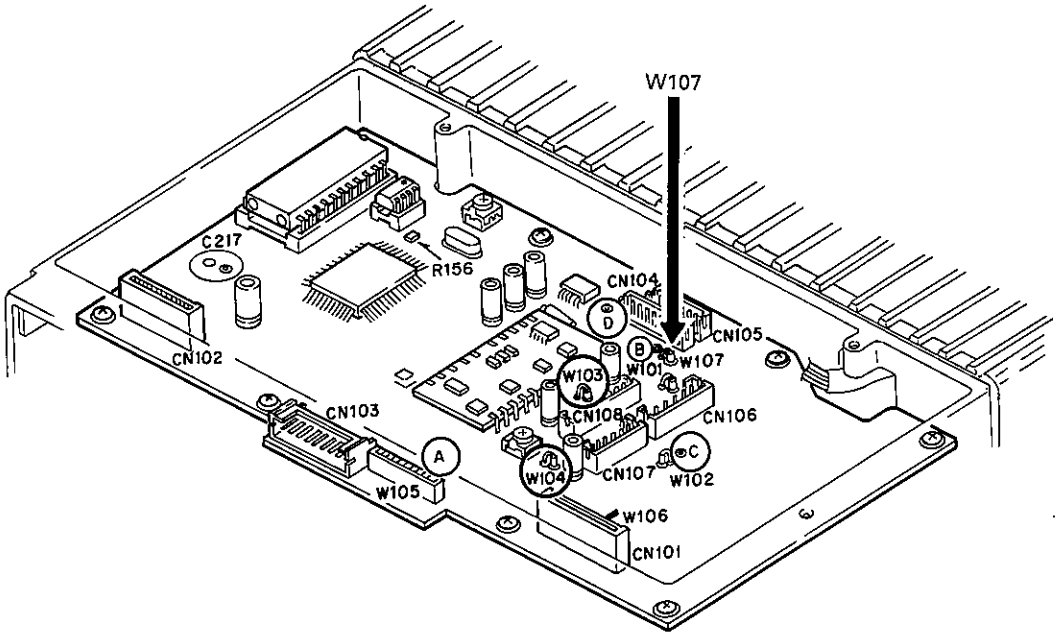

Fig. 17

1. Removing the Case and Shield Cover

1. Remove the eight screws (❶), and remove the upper and lower halves of the case. (Remove the four screws holding the upper half and the four screws holding the lower half.)
2. Remove the shield cover.

2. Removing the TX-RX Unit (X57- B/4)

1. Remove the seven screws (❸).
2. Remove the connector (CN304) and coaxial plugs (CN301, CN303) from the final unit, and remove the flat cable (CN305) upwards from the control unit (CN102)

3. Removing the AF Unit (X57- C/4)

1. Remove the four screws (❹).
2. With a screwdriver, remove the two leaf springs (❺) holding the IC to the frame.
3. Remove the connector (CN502) from the final unit (W1), and remove the flat cable (CN502) upwards from the control unit (CN101).

4. Removing the Final Unit (X57- D/4)

1. Remove the two screws (❻) holding the power module to the frame.
2. Remove the two screws (❼) holding the lead terminal from ACC connector (6P) on the rear.
3. Remove the eight screws (❽) holding the PC board.
4. Desolder W4 on the antenna connector side.

DISASSEMBLY FOR REPAIR

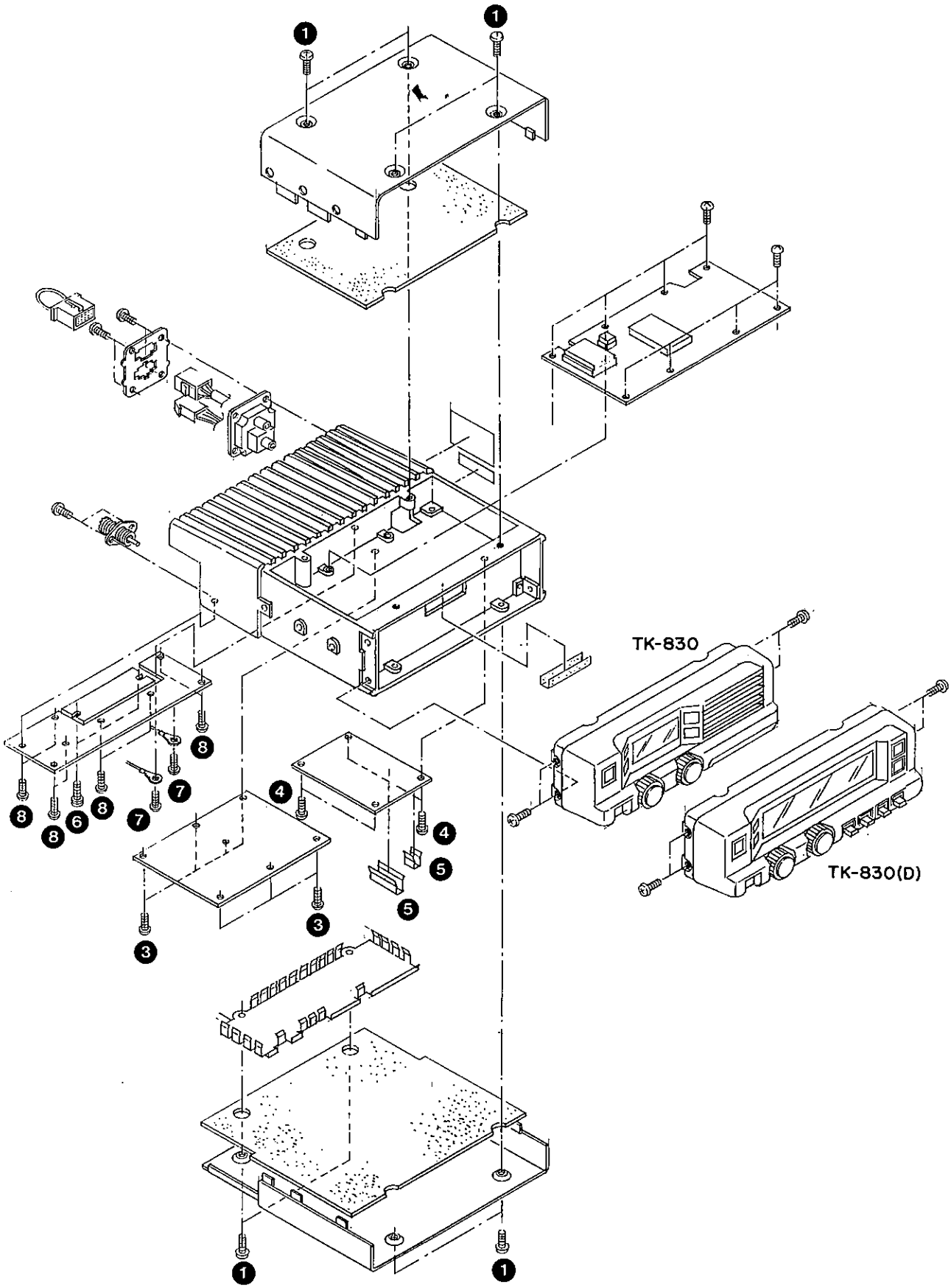

DISASSEMBLY FOR REPAIR

5. Removing the Control Unit (X57- A/4)

1. Remove the eight screws (⑫).
2. Remove flat cables CN101 and CN102.
3. Remove the two connectors (CN104 and CN105) from ACC connector (15P) on the rear.

6. Removing the Accessory Connector (ACC 15P, ACC 6P) on the Rear

1. Confirm that the screw holding CN3 and the screw holding CN4 of the final unit (X57- D/4) are removed, and that CN104 and CN105 of the control unit (X57-A/4) are disconnected. Remove the four screws on the rear (⑬).
2. Pull out the connector. (Take the connector terminals out through the opening in the frame.)

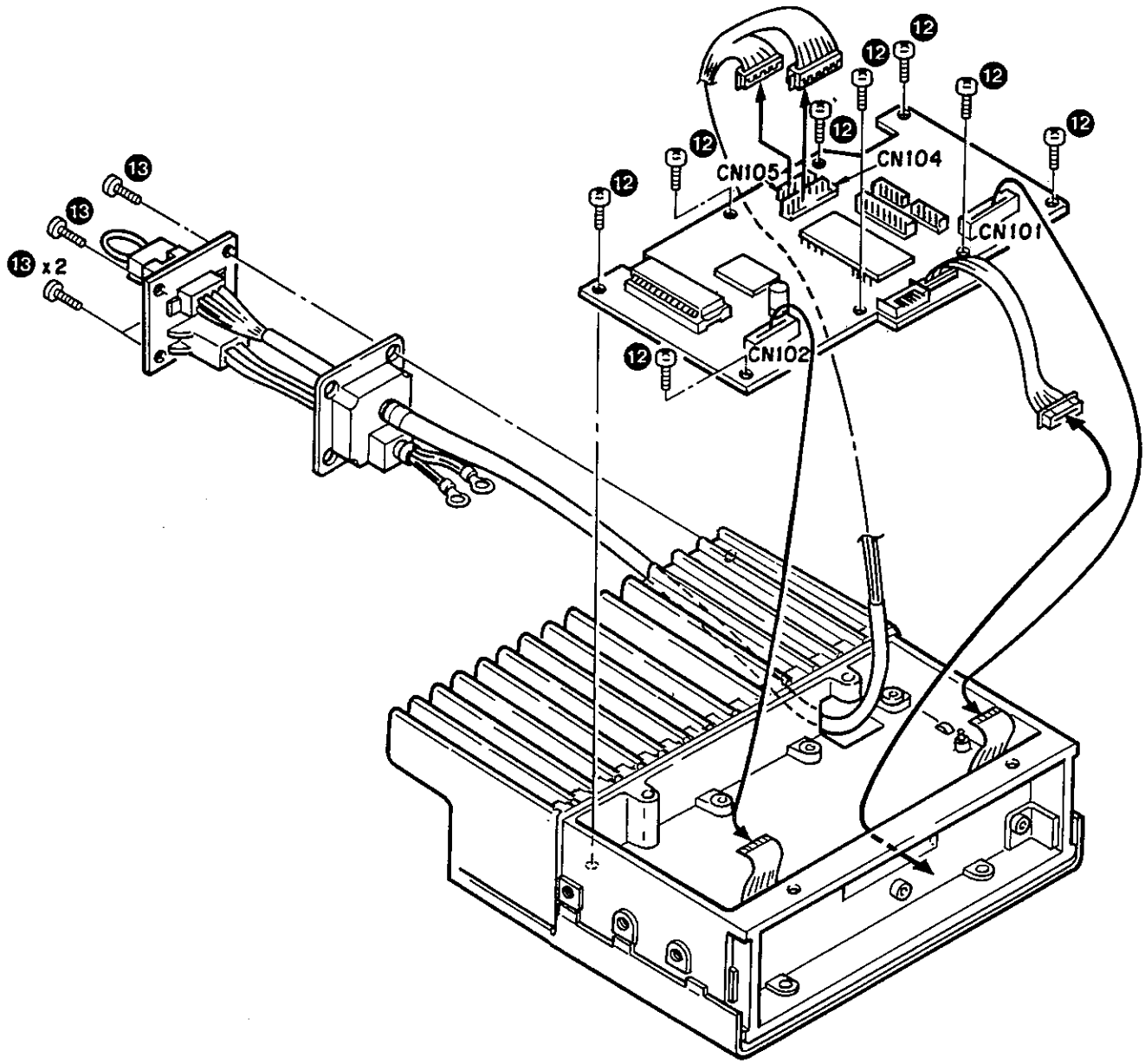

DISASSEMBLY FOR REPAIR

7. Disassembly of the Display Unit (X54-3100) : KCH-3

1. Pull out the VOL and CH knobs (❶).
2. Remove the two hexagonal nuts (❷).
3. Disconnect the two connectors (CN3 and CN4) (❸) of the display unit (X54-3100 A/2), and remove the two screws (❹). You can remove the channel encoder (❿) and display unit.
4. Remove the four screws (❻) holding the speaker and PC board fitting (❺).
5. Remove the two screws (❼), and remove the sub-panel (❽) and keytop (❾).

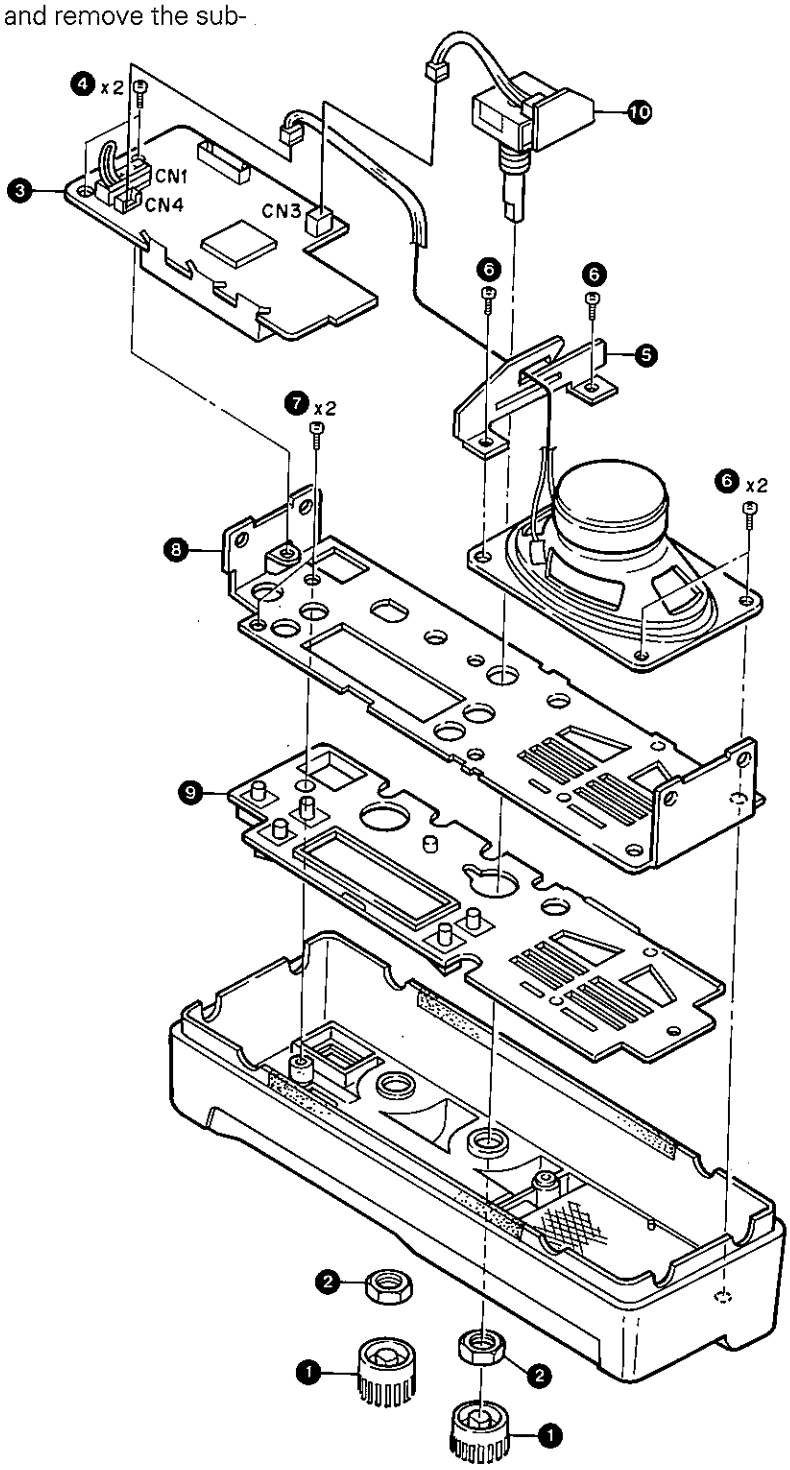

DISASSEMBLY FOR REPAIR

8. Disassembly of the Display Unit (X54-3110) : KCH-4

1. Pull out the VOL and CH knobs (❶).
2. Remove the two hexagonal nuts (❷).
3. Disconnect the connector (CN3) (❸) of the display unit (X54-3110 A/2), and remove the five screws (❹). You can remove the channel encoder (❺) and display unit.
4. Remove the four screws (❻), and remove the sub-panel (❼) and keytop (❽).

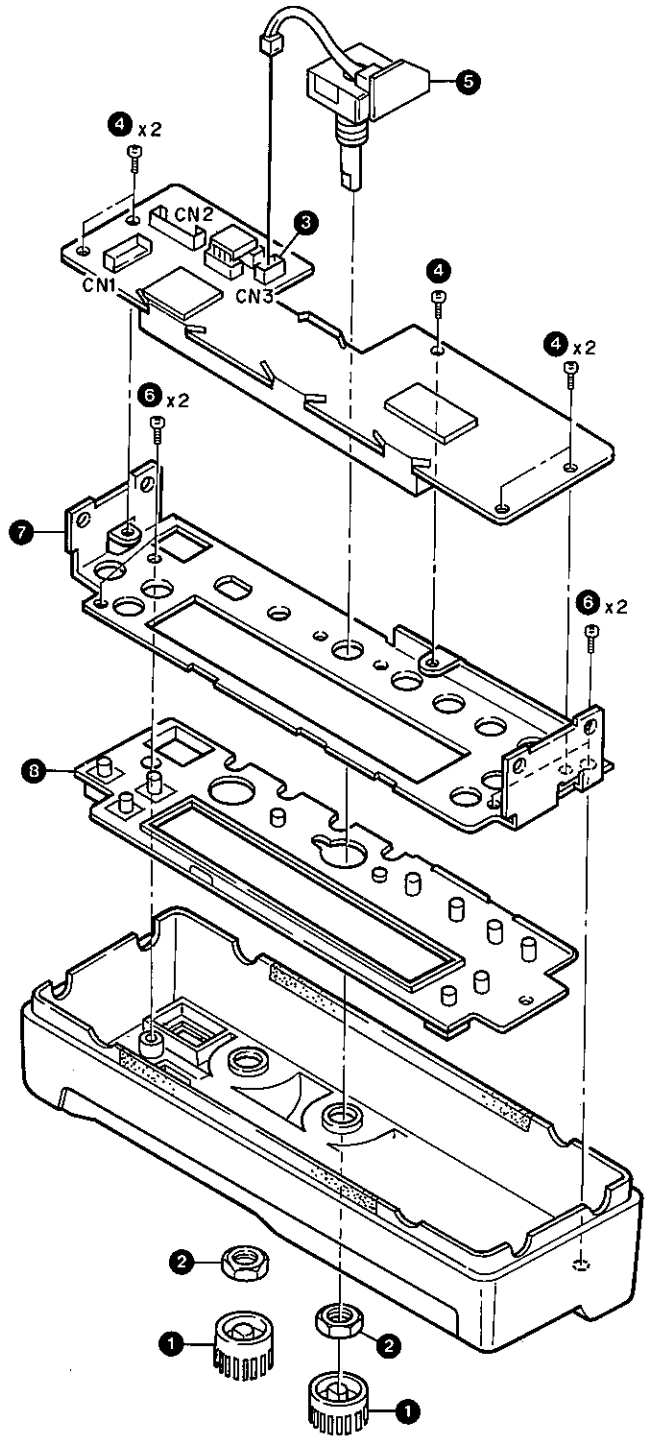

 TK-830/(B)/(D)

BLOCK DIAGRAM

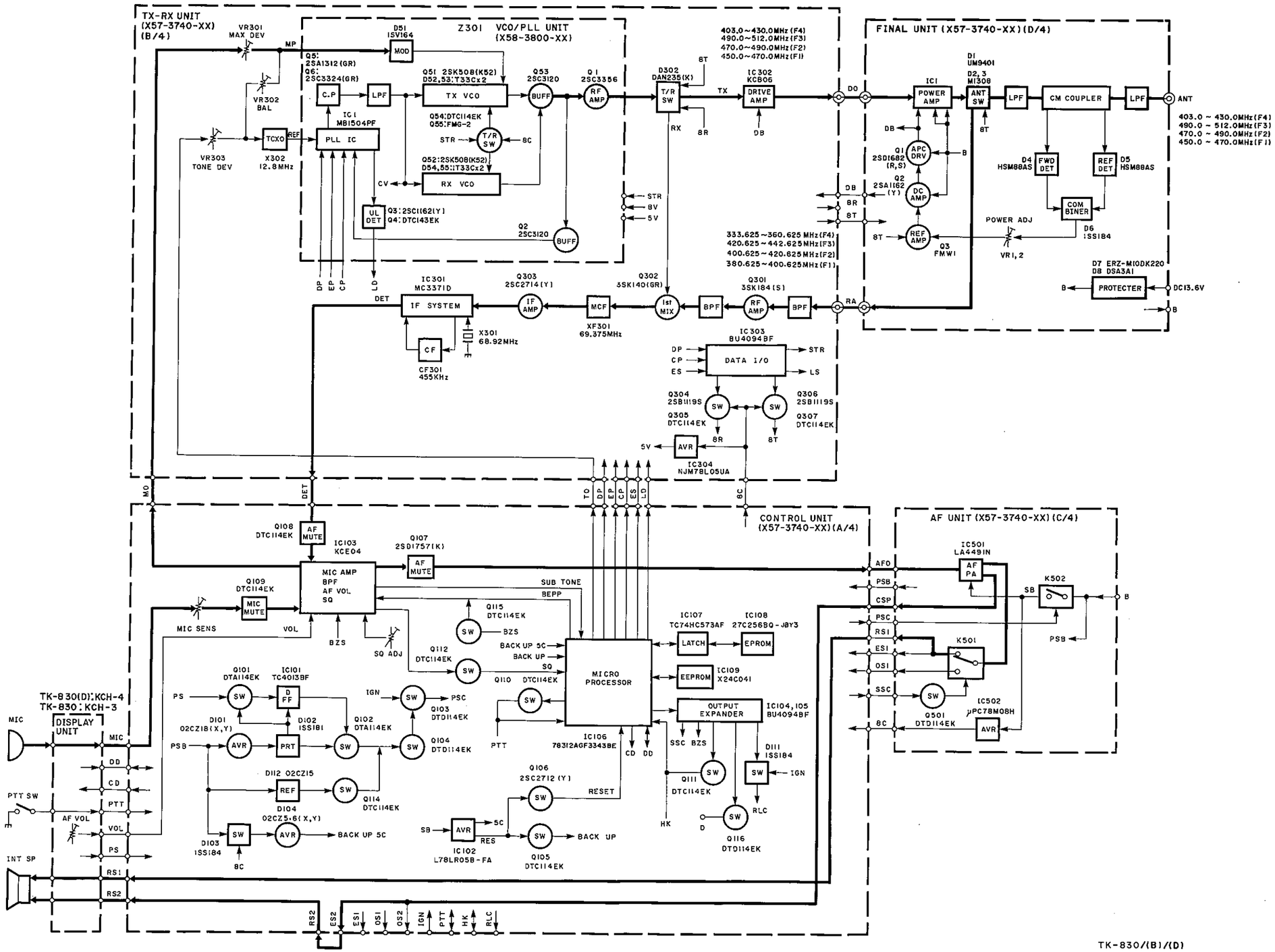

CIRCUIT DESCRIPTION

1. Transmitter Circuit

The audio input from the microphone is attenuated by VR101 and input to MC1 of the audio HIC of IC103 (KCE04). It passes through the active low-pass filter in IC1, limiter D1, the pre-emphasis circuit in IC1, and the active low-pass filter in IC2, which are part of IC103, and is output from the MCO terminal to the CN102 MO terminal. Q109 is used as a microphone mute switch.

The signal from the MO terminal goes to D51 in the VCO unit (Z301), and the VCO is directly modulated. The transmit signal output from the VCO (Z301) passes through switch D302, is amplified by pre-drive hybrid IC IC302, and is applied to drive hybrid IC IC1.

The signal is power amplified by IC1, and the output of IC1 is fed through transmit/receive switching diode D1~D3, low-pass filter, and CM coupler to the antenna connector.

CM coupler is a line for detecting traveling and reflected waves. Travelling waves are detected by D4 and fed through the APC control (VR1, VR2) to differential amplifiers Q3, which compare the signal level with the reference voltage. The output is amplified by DC amplifier Q2 to control APC DC amplifier Q1. Q1 controls the power supply voltage for IC1, keeping the transmitter output constant.

To protect the transmitter power amplifier stages, there is protection circuit, against abnormal antenna loading. If an abnormal antenna load is connected, the reflected wave level increases. Reflected waves are detected by D5 and the output level is fed to the differential amplifier, leading to the transmitter output power being reduced in the way already described.

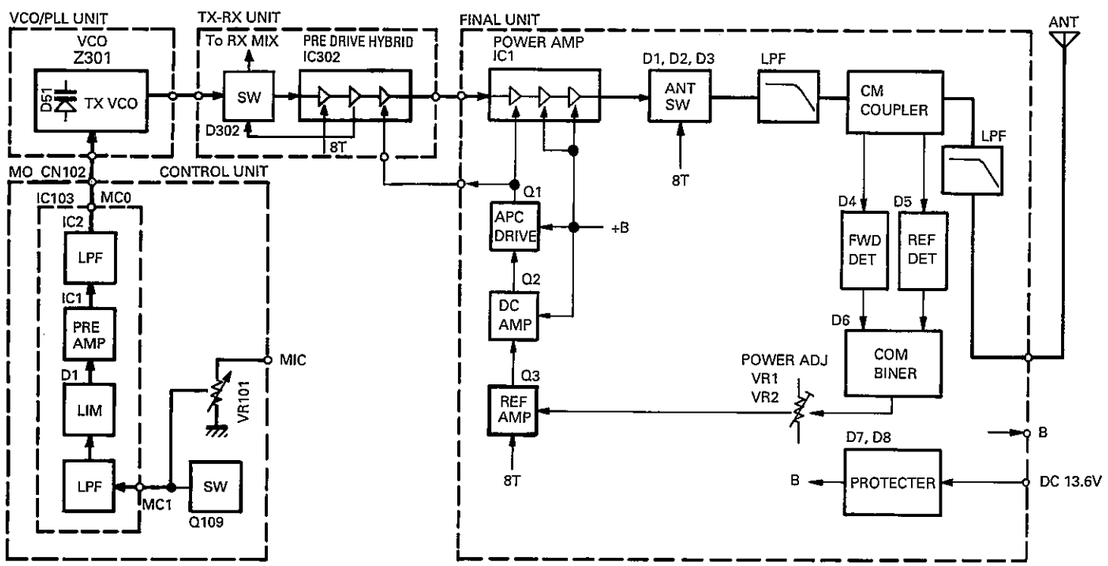

Fig. 1 Transmitter block diagram

CIRCUIT DESCRIPTION

2. Receiver Circuit

Incoming signals from the antenna pass through a low-pass filter in the final unit of the transmitter system, and are switched to the front-end of the receiver system via a receive/transmit switching diode (D1~D3).

The signal are then passed through an antenna matching coil, where the high-frequency components are amplified by a GaAs FET (Q301). The signals are then fed into bandpass filter that uses varactor diode tuning to reject unwanted signal components, and is fed to the 1st mixer.

The 1st mixer uses the GaAs FET (Q302) that are used in the RF stage to obtain better two-signal characteristics. The 1st mixer mixes the signal with the 1st local oscillator frequency (Z301) and converts it to the 1st IF (69.375MHz).

The signal then passes through two monolithic crystal filters (XF301) to remove unnecessary near-by frequency components. The signal from the XF301 is used as the 1st IF signal.

The 1st IF signal is amplified (Q303) and fed into IC301 in the FM IF IC. The IF signal is then mixed with the 2nd local oscillator frequency of 68.92MHz to generate the 2nd IF of 455kHz. The 455kHz signal is then passed through a ceramic filter (CF301) and fed back into IC301 for additional amplification. The output signal from the IC301 is then fed into a power amplifier via the IC103 (KCE04) on the control unit to the speaker.

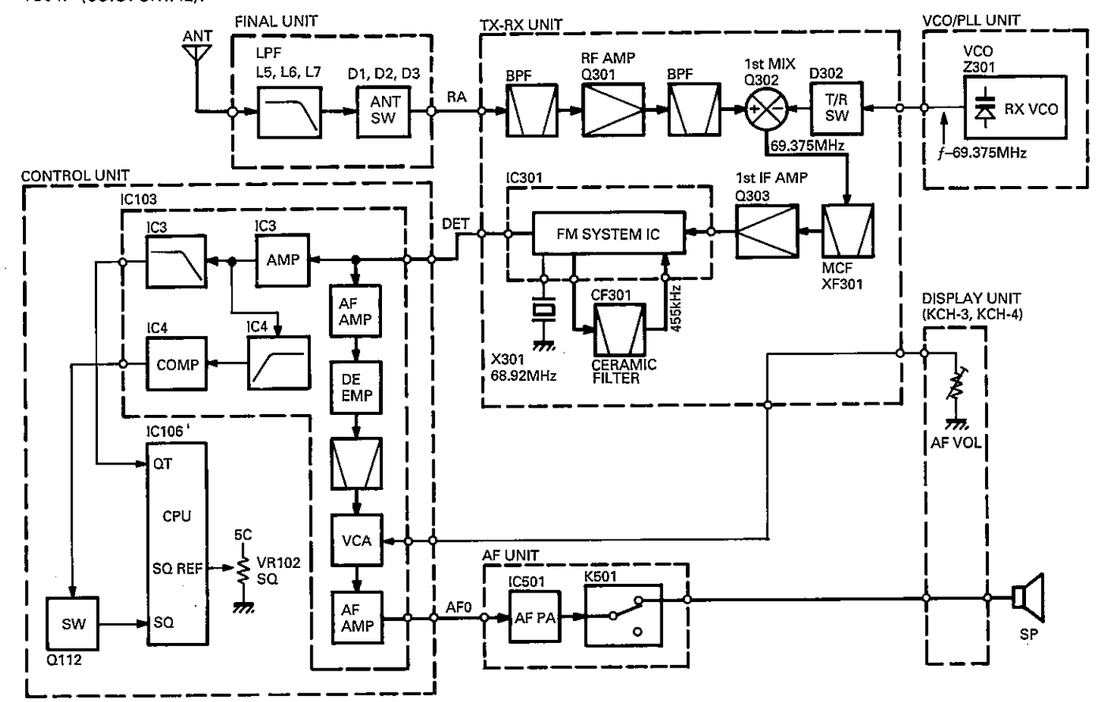

Fig. 2 Receiver block diagram

CIRCUIT DESCRIPTION

Item	Rating
Nominal center frequency	69.375MHz
Pass bandwidth	±7.5kHz or more at 3dB
Attenuation bandwidth	±30kHz or less at 40dB
Ripple	1dB or less
Insertion loss	3dB or less
Guaranteed attenuation	70dB or more within fo ÷ (500~1000) kHz 80dB or more within fo – (200~1000) kHz
Terminating impedance	2kΩ ± 10%

Table 1 MCF (L71-0415-05) : TX-RX unit XF301

Item	Rating
Nominal center frequency	455kHz ± 1kHz
6dB bandwidth	±6kHz or more (from 455kHz)
50dB bandwidth	±12kHz or less (from 455kHz)
Ripple (within ±4kHz of 455kHz)	3dB or less
Insertion loss	6dB or less
Guaranteed attenuation (within ±100kHz of 455kHz)	50dB or more
I/O matching impedance	1.5kΩ

Table 2 Ceramic filter (L72-0342-05) : TX-RX unit CF301

3. Squelch Circuit

3-1. Squelch

The signal from the detector is input to the IC103 audio HIC. It is amplified by IC3, and passes through IC4 (high-pass filter), and pulses are output by IC4 (comparator). The pulse level is shifted by Q112, and is input to the pulse count port of IC106 (CPU). The CPU compares the number of pulses with the voltage of the A/D conversion port of the SQREF to detect squelch.

3-2. QT/DQT

The signal from the detector is input to the IC103 audio HIC. It is amplified by IC3 (1/2), and only the signal components below 300 Hz are output from IC103 by IC3 2/2 (low-pass filter). This signal is input to the analog input port (QT) of IC106 (CPU), and is digitized by the CPU. DIgital signal processing is performed by the digital filter, and QT/DQT is detected.

4. Audio Circuit

The AF unit consists of IC501 (audio power amplifier), K502 (power on/off relay), K501 (speaker switching relay), and IC502 (8V AVR).

The audio signal output from IC103 of the control unit passes through the AFO terminal, is amplified by power amplifier IC501 to the rated output, passes through K501, and is output from the RS1 terminal to drive the speaker.

Power on/off relay K502 is operated by PSC (low at power on) from the control unit to turn the transceiver power on and off.

The 13.4V DC voltage is regulated to 8V by the 8V AVR (IC502).

Speaker output switching relay K501 changes the signal output destination when Q501 is turned on by SSC (normally low). When public address output is performed or a receive signal is output to the public address speaker (the PA or SP key is on), SSC goes high, and is output from the OS1 terminal.

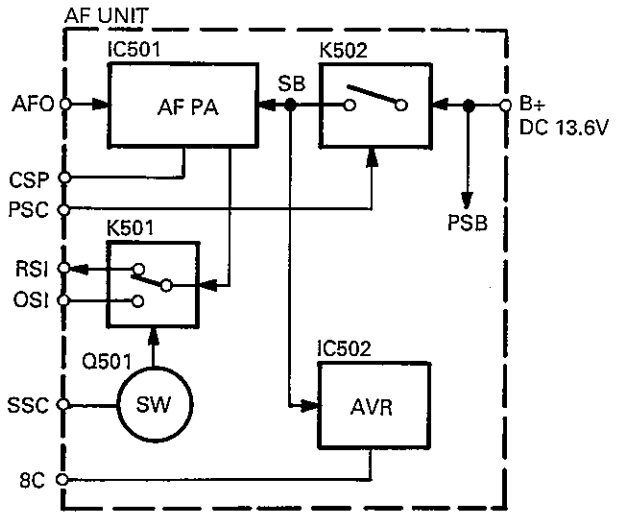

Fig. 3 Audio block diagram

CIRCUIT DESCRIPTION

5. VCO/PLL Unit (Z301)

The PLL generates the transmit signal and the first local oscillator receive signal. The RF signal generated by Q51 (TX) or Q52 (RX) in the VCO unit is amplified by Q53 and Q1 (PLL unit), and the resulting signal is output to the TX-RX unit. TX and RX Q51 and Q52 are switched by turning the source line for Q51 and Q52 on and off. This is done by Q54 and Q55 using the control signal (STR) generated by the serial-to-parallel converter in the TX-RX unit. The RF signal passes through Q53 of the VCO unit and amplifier Q2, and is input to IC1 (PLL IC : MB1504PF). The 12.8MHz PLL reference signal generated by the TCXO (X302) in the TX-RX unit is also input to IC1.

Both signals are divided according to the division data from the control unit to produce a 12.5kHz signal. The phases are compared, and a phase difference signal is output and passes through Q5 and Q6 (charge pump) and the low-pass filter of the lug lead to produce the control voltage for Q51/Q52 (VCO). This voltage is applied to D52 and D53 (TX) or D54 and D55 (RX) in the VCO unit to control the frequency. If the PLL is unlocked, the IC1 lock detect signal (LD) is converted to a DC signal by Q3 and Q4, and is sent to the microcomputer (IC106) of the control unit. The microcomputer determines that the PLL has been unlocked, and stops signal transmission. It outputs a beep as a warning.

The modulation signal (MP) passing through the VR in the TX-RX unit goes to D51, which is connected to Q51 of the VCO in the VCO unit, and the VCO is directly modulated.

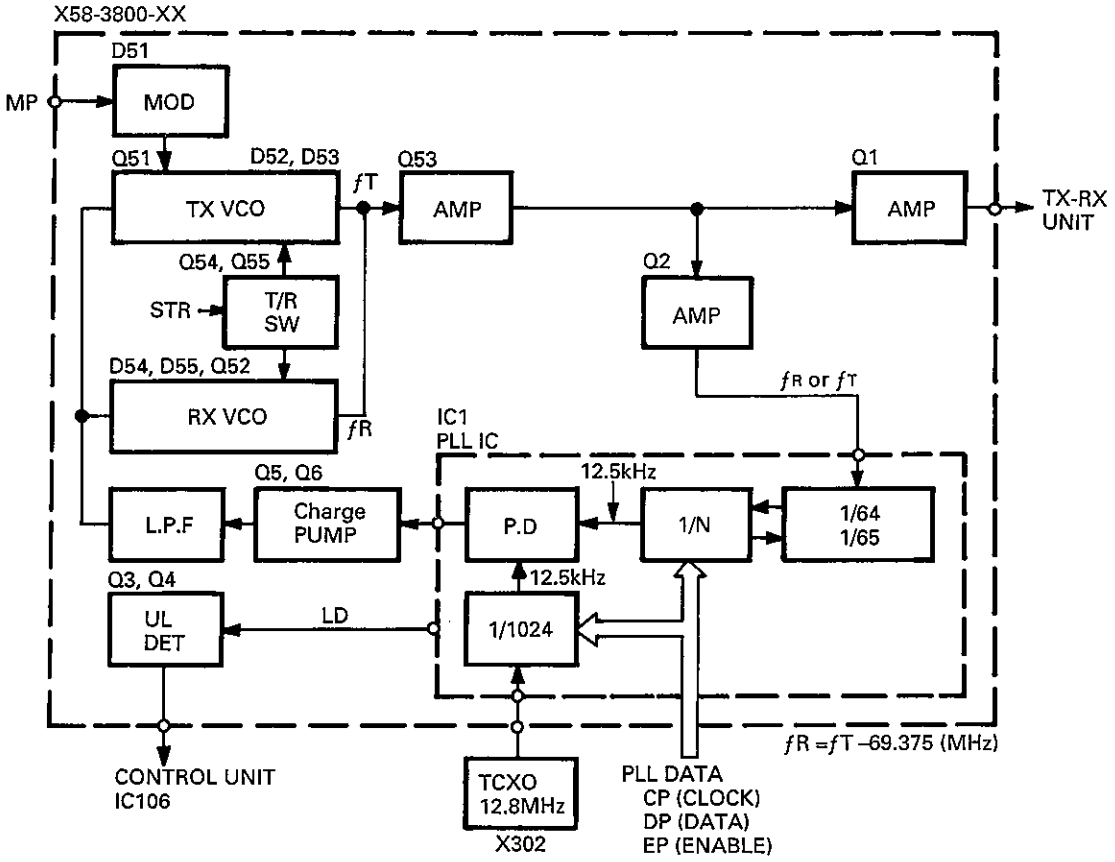

Fig. 4 VCO/PLL block diagram

CIRCUIT DESCRIPTION

6. Control Circuit

6-1. CPU backup and reset

When the CPU is backed up (8C=0V, SB=0V), the PSB voltage passes through a diode OR swich (D103), and is made into a constant voltage of 5V (AVR) by a zener diode (D104) to supply power to the VDD pin of the CPU (IC106). Q105 and Q106 are off, and Reset and NMI (backup interrupt) are high (5V).

When the power switch is turned on, 8C and SB go high. SB is supplied to IC102, and when the output voltage becomes 4.8V, reset delay capacitor C113 is charged. When charging ends, a high signal is output to the IC106 Reset pin.

Q105 turns on and NMI goes low. Q106 is turned on momentarily by reverse polarity diode D106 and pulse generation capacitor C113, and the CPU Reset pin goes low, resetting the CPU.

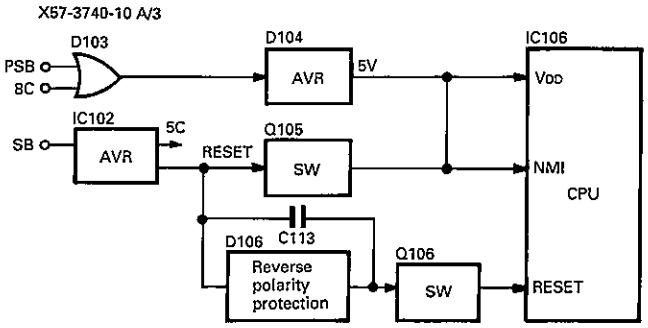

Fig. 5 CPU backup and reset

6-2. Peripheral circuits of the CPU

The transceiver system and channel data is stored in IC109. The PTT and HOOK signals are converted to serial data and sent to the CPU (IC106) from the display unit (KCH-3 or KCH-4). The serial data signal output from the CPU is sent to the display unit, and data is displayed on the LCD by the LCD driver.

Q110 and Q111 are switching transistors that turn the CPU output on and off.

IC104 and IC105 are used as IC106 expantion ports.

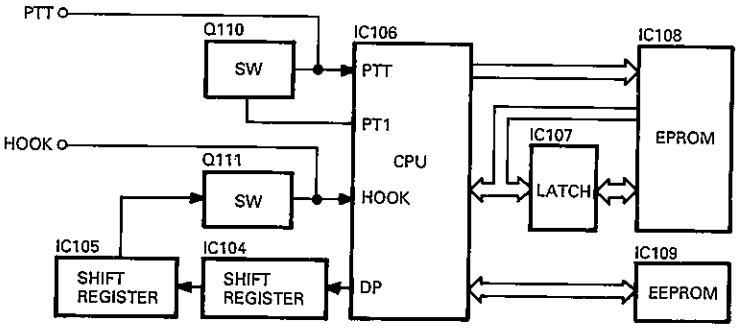

Fig. 6 Peripheral circuit of the CPU

6-3. Transceiver power supply relay (K502: AF unit) control circuit

The voltage is always applied from PSB. The voltage is used to protect IC101 (D/FF) by D101. Pulses from which chattering has been eliminated by Q101 are input to the IC101 clock line. These clock pulses reverse the output. The reversed output drives Q104 via Q102. Since Q103 ANDs Q104, relay K502 cannot be activated unless a voltage is applied to IGN.

If zener diode D112 is connected to PSB, and 24V is supplied to the radio by mistake, Q114 turns on, Q104 turns off, and PSC goes high ; The power is forced to be turned off.

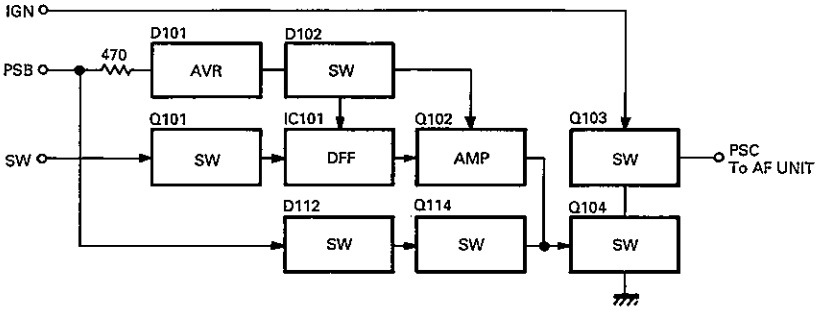

Fig. 7 Transceiver power supply relay control circuit

CIRCUIT DESCRIPTION

7. Display Unit

The optional display unit (front panel unit) for the TK-830(B) comes in two models : KCH-3 and KCH-4.

7-1. KCH-3 (Contain : TK-830)

This display unit consists of a CPU (IC1) containing the LCD driver, a reset AVR (IC2), and other components.

- **Encoder**

Channels are changed by the rotary encoder (ENC). The up/down pulses from the rotary encoder enter the CPU (IC1) by interrupt processing by D5 (diode OR), are converted to a serial data signal, and are sent to the control unit.

- **Power supply**

Power is supplied to the CPU and backlight lamp (D6, LED assembly) by converting SB from the control unit to 5V by IC2. The CPU (IC1) is reset by the reset output from IC2 when the power is switched on.

- **CPU (containing LCD driver)**

The on/off signals of keys other than the power switch, and the PTT and HOOK signals, are converted to serial data and sent to the control unit. Data is displayed on the 13-segment, 2-digit LCD by the built-in LCD driver using the serial data signal from the control unit.

- **LED (LCD backlight) on/off**

When the AUX key is turned on, Q1 turns on, Q2 turns off, and the LED is tuned off by the output from the CPU (IC1). Q1 turns the AUX output on and off if the AUX key is not used to turn the LED on and off.

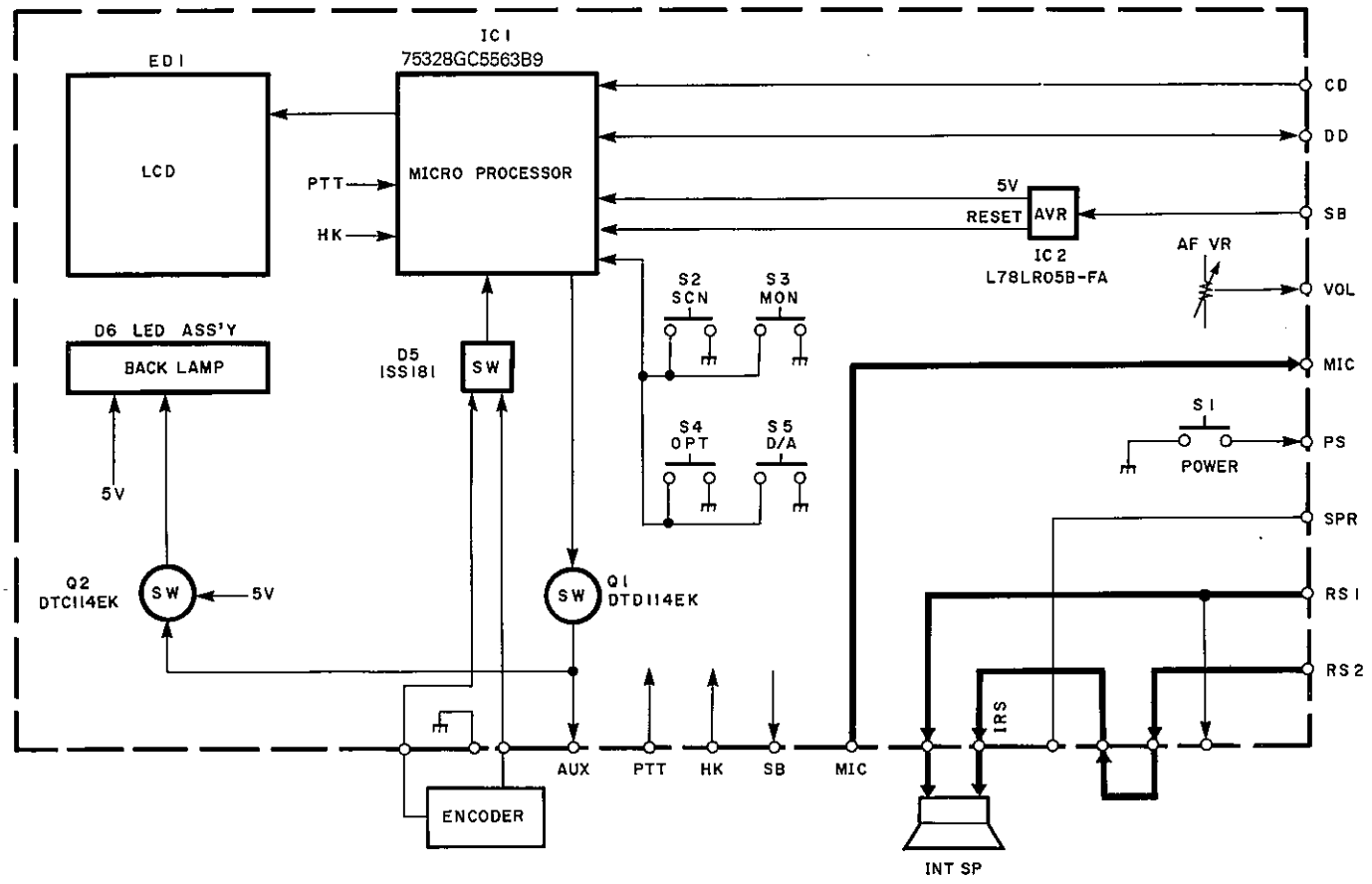

Fig. 8 KCH-3 block diagram

CIRCUIT DESCRIPTION

7-2. KCH-4 (Contain : TK-830(D))

This display unit (front panel unit) consists of a CPU (IC1) containing the LCD driver, a reset AVR (IC2), an EEPROM (IC3), an LCD driver (IC4), and other components.

- **Encoder**

Channels are changed by the rotary encoder (ENC). The up/down pulses from the rotary encoder enter the CPU (IC1) by interrupt processing by D5 (diode OR), are converted to a serial data signal, and are sent to the control unit.

- **Power supply**

Power is supplied to the CPU (IC1) and backlight lamp (D7, LED assembly) by converting SB from the control unit to 5V by IC2. The CPU (IC1) is reset by the reset output from IC2 when the power is switched on.

- **CPU (containing LCD driver)**

The on/off signals of keys other than the power switch, and the PTT and HOOK signals, are converted to serial data signals and sent to the control unit. The display data stored in IC3 is displayed on the 13-segment, 12-digit LCD by the built-in LCD driver using the serial data signal from the control unit.

- **LED (LCD backlight) on/off**

When the AUX key is turned on, Q1 turns on ; Q3, which supplies SB to Q2 and D6 of the LED constant-voltage circuit, outputs 0V ; and the LED goes off. Q1 turns the AUX output on and off if the AUX key is not used to turn the LED on and off.

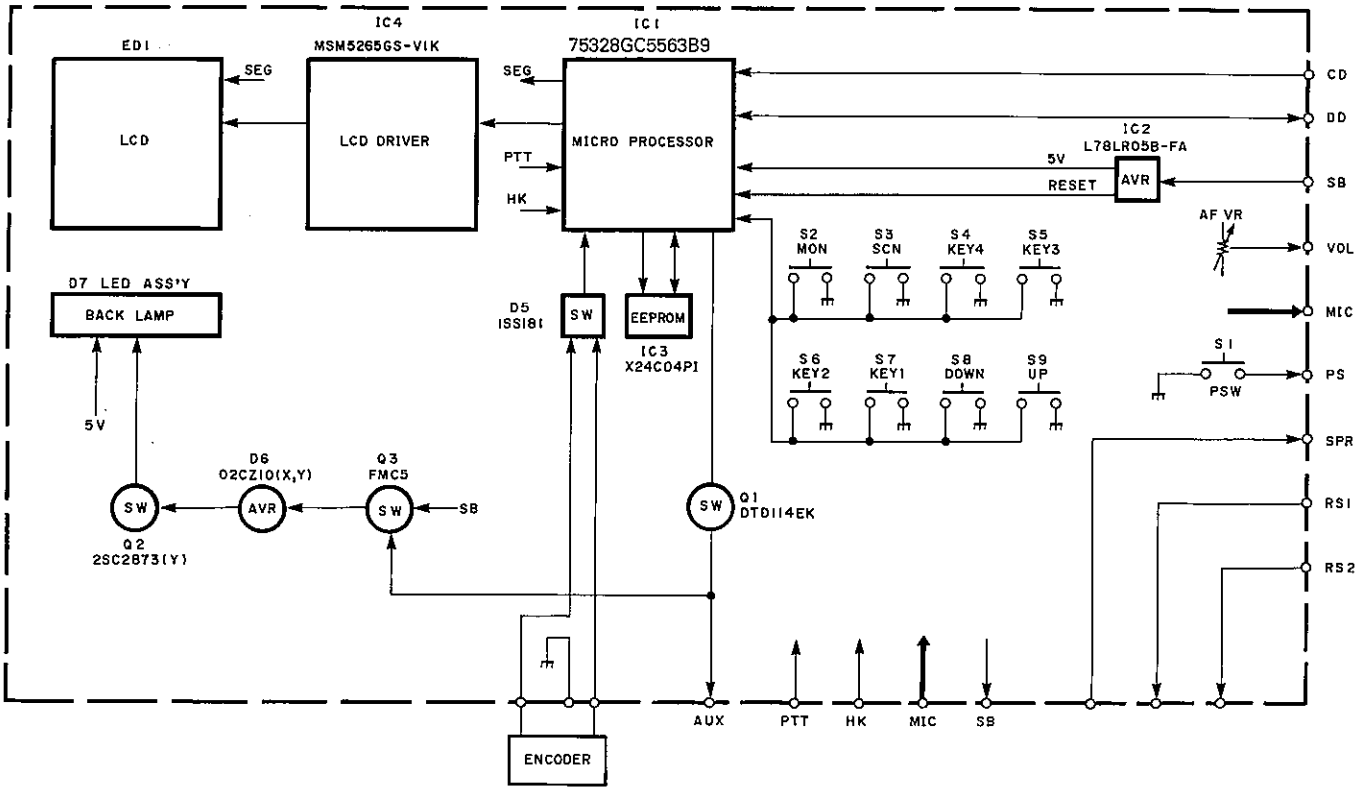

Fig. 9 KCH-4 block diagram

SEMICONDUCTOR DATA

HIC : KCE04 (Control Unit IC103)

- **Analog and peripheral switches**

	CPU control signal								
Function	VS	DS	BZS	MS	Q107	Q108	Q109	W103	W104
Audio output	○	○	●	●	●	●	○	○	○
Microphone input	●	●	●	●	●	●	●	○	○
Public address	○	●	●	○	●	○	●	○	○
Inter communication (H1 → H2)	●	●	●	○	●	○	●	○	○
Beep output (H1)	●	●	○	●	●	○	●	○	○
Voice scramble (RX)	○	○	●	●	●	●	○	●	●
Voice scramble (TX)	●	●	●	●	○	○	●	●	●

○ : ON, ● : OFF

- **Block diagram**

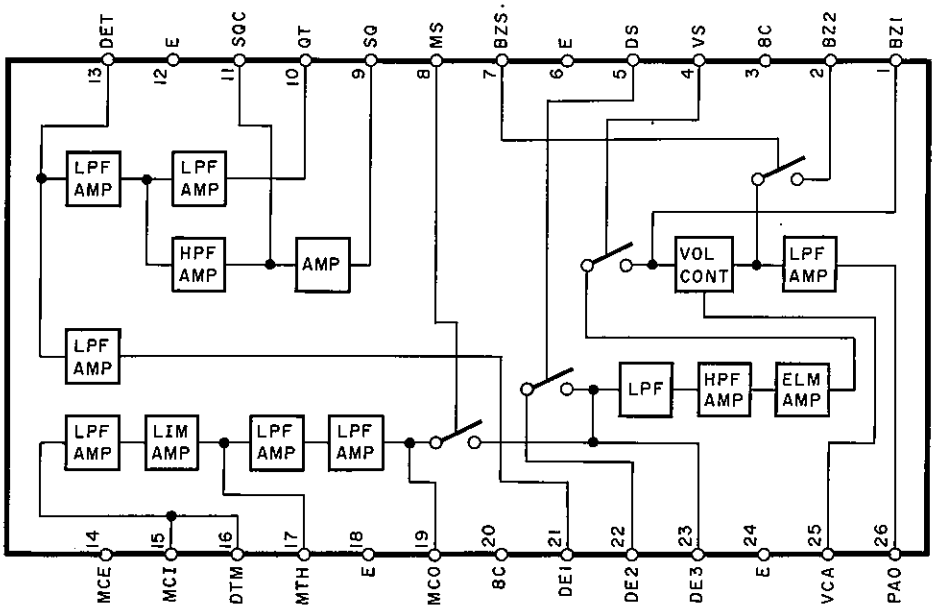

Audio Power Amplifier : LA4491N (AF Unit IC501)

- **Terminal connection diagram**

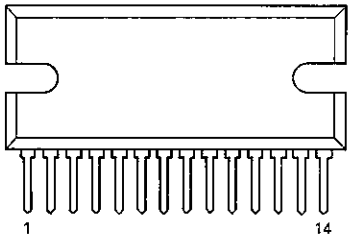

- **Electrical characteristics**

Item	Symbol	Condition	Rating			Unit
			MIN	TYP	MAX	
DC current	Icc	vin = 0	40	80	160	mA
Output power	Po	T.H.D. = 10%	16	19	–	W
Distortion	T.H.D.	Po = 1W	–	0.06	0.3	%
Voltage gain	VG		38	40	42	dB
Noise output voltage	VNO	RG = 10kΩ	–	160	320	μV

Ta = 25°C, Vcc = 13.2V, f = 1kHz, RL = 4Ω

Power Amplifier : M57788H
M57788UH
M57788SH
M57788L
(Final Unit IC1)

- **Terminal connection diagram**

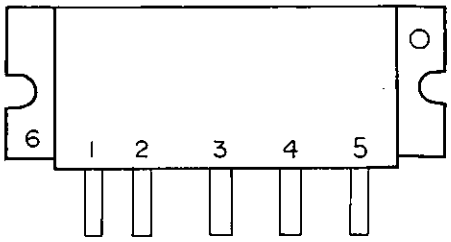

SEMICONDUCTOR DATA

EEPROM : X24C16PI (Channel Expansion Kit KCH-5 : Option)

• Terminal description

No.	Name	Description
1	A0	Address inputs
2	A1	The A0, A1 and A2 inputs are unused by the X24C16PI, however,
3	A2	they must be tied to Vss to insure proper device operation.
4	Vss	Vss
5	SDA	Serial data SDA is a bidirectional pin used to transfer data into and out of the device. It is an open drain output and may be wire-ORed with any number of open drain or open collector outputs.
6	SCL	Serial clock The SCL input is used to clock all data into and out of the device.
7	TEST	Test input → to Vss
8	Vcc	Vcc

• Terminal connection diagram

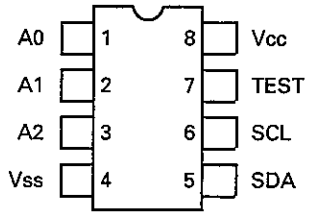

• Operating characteristics Ta = −40°C to +85°C, Vcc = +5V ±10%, unless otherwise specified.

Item	Symbol	Condition	Rating			Unit
			Min	Typ *1	Max	
Power supply current	ICC	fSCL= 100kHz	–	2.0	3.0	mA
Standby current *2	ISB	VIN = GND or Vcc	–	60	100	µA
Input Leakage current	ILI	VIN = GND to Vcc	–	0.1	10	µA
Output leakage current	ILO	VOUT = GND to Vcc	–	0.1	10	µA
Input low voltage	VIL		−1.0	–	Vcc x 0.3	V
Input high voltage	VIH		Vcc x 0.7	–	Vcc + 0.5	V
Output low voltage	VOL	IOL = 3mA	–	–	0.4	V

*1 : Typical values are for Ta = 25°C and nominal supply voltage.
*2 : SDA and SCL require pull up resistor.

• Read & write cycle limits Ta = −40°C to +85°C, Vcc = +5V ±10%, unless otherwise specified.

Item	Symbol	Min	Max	Unit
SCL clock frequency	fSCL	0	100	kHz
Noise suppression time constant at SCL, SDA inputs	TI	–	100	ns
SCL low to SDA data out valid	tAA	0.3	3.5	µs
Time the bus must be free before a new transmission can start	tBUF	4.7	–	µs
Start condition hold time	tHD:STA	4.0	–	µs
Clock low period	tLOW	4.7	–	µs
Clock high period	tHIGH	4.0	–	µs
Start condition setup time (for a repeated start condition)	tSU:STA	4.7	–	µs
Data in hold time	tHD:DAT	0	–	µs
Data in setup time	tSU:DAT	250	–	ns
SDA and SCL rise time	tR	–	1	µs
SDA and SCL fall time	tF	–	300	ns
Stop condition setup time	tSU:STO	4.7	–	µs
Data out hold time	tDH	300	–	ns

• Bus timing

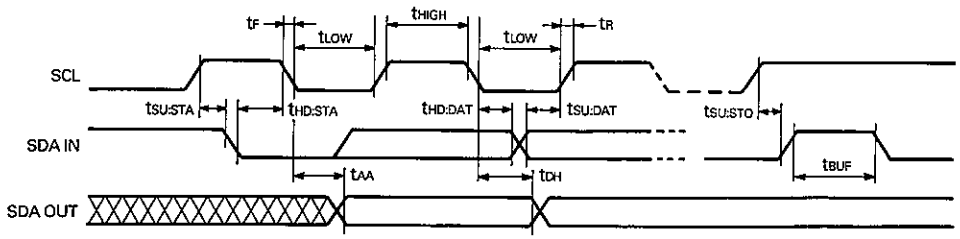

SEMICONDUCTOR DATA

CPU : 78312AGF3343BE (Control Unit IC106)

- **Terminal connection diagram**

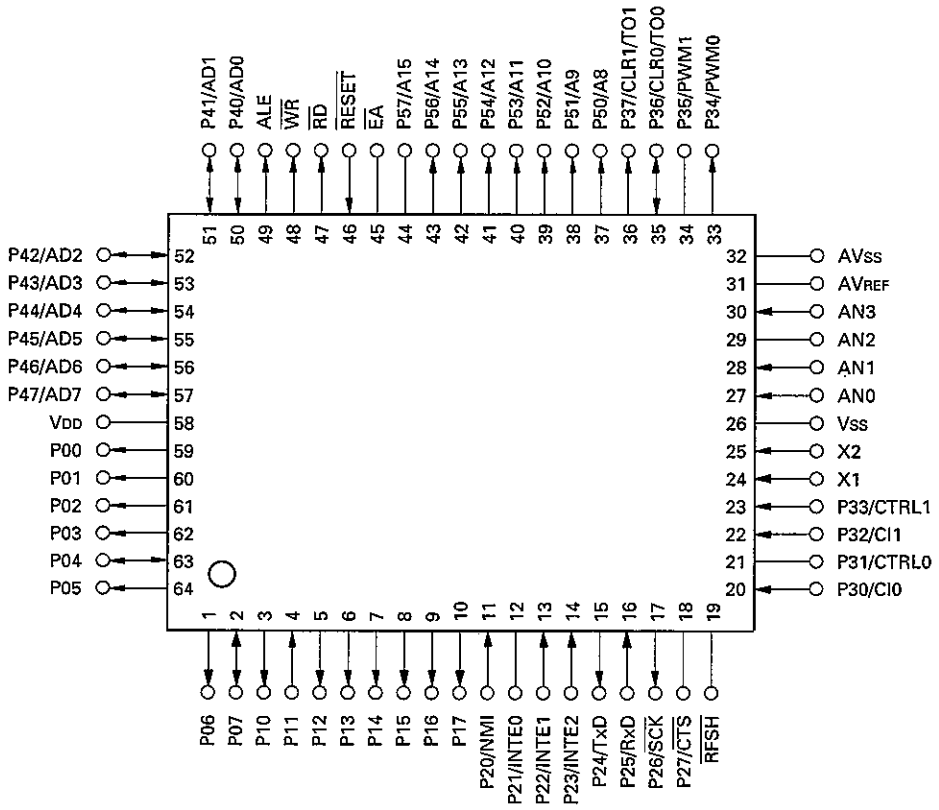

- **Terminal function**

Pin No.	Pin name	I/O	Function	Pin No.	Pin name	I/O	Function
1	P06	O	STROBE output.	27	AN0	I	ANALOG input (QT. DET).
2	P07	I/O	Serial data input/output (DISPLAY 2).	28	AN1	I	Not use.
3	P10	O	CLOCK output (DISPLAY 2).	29	AN2	–	GND.
4	P11	I	Dead beet disable input.	30	AN3	I	NOISE SQ REFERENCE input.
5, 6	P12, P13	O	Five-tone data rewrite output.	31	AVREF	–	+5V.
7	P14	O	Control STROBE output (BU4094BF).	32	AVSS	–	GND.
8	P15	O	AC1 (SCRAMBLER) output.	33	P34/PWM0	O	PWM output, TONE output.
9	P16	O	PTT SW output.	34	P35/PWM1	–	Open (not use).
10	P17	O	Beep output (HEAD 1).	35	P36/CLR0/TO0	I/O	EEPROM (X24C04PI) serial data input/output.
11	P20/NMI	I	Backup interrupt input.	36	P37/CLR1/TO1	O	EEPROM (X24C04PI) CLOCK output.
12	P21/INTE0	–	Open (not use).	37~43	A8~A14	O	Address output.
13	P22/INTE1	I	PTT SW input.	44	P57/A15	–	Open (not use).
14	P23/INTE2	I	HOOK SW input.	45	EA	–	+5V.
15	P24/TXD	O	Serial data output (RADIO 1, 2).	46	RESET	I	System reset input.
16	P25/RXD	I	Serial data input (RADIO 1, 2).	47	RD	O	EPROM read strobe output.
17	P26/SCK	O	Beep output (HEAD 2).	48	WR	O	Open (not use).
18	P27/CTS	–	GND.	49	ALE	O	Latch enable output.
19	RFSH	–	Not use.	50~57	AD0~AD7	I/O	Address output, DATA input.
20	P30/CI0	I	Noise pulse input.	58	VDD	–	+5V.
21	P31/CTRL0	–	Not use.	59	P00	O	PLL ENABLE output.
22	P32/CI1	I	Unlock signal input.	60	P01	O	TX/RX STROBE output.
23	P33/CTRL1	I	AC2 (optional matching signal) input.	61	P02	O	CLOCK output.
24	X1	I	CLOCK input.	62	P03	O	Serial data output.
25	X2	I	CLOCK input.	63	P04	I/O	CLOCK input/output (DISPLAY 1).
26	VSS	–	GND.	64	P05	O	Serial data output (DISPLAY 1).

SEMICONDUCTOR DATA

CPU, LCD Driver : 75328GC5563B9 (Display Unit X54-3100 : KCH-3 IC1)

- **Terminal connection diagram**

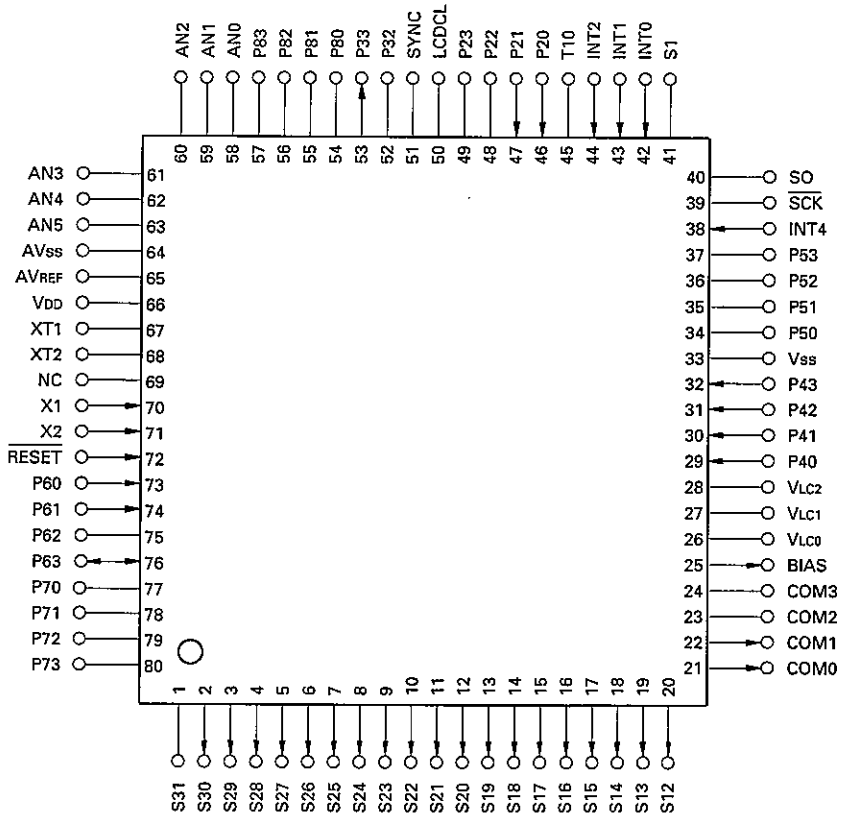

- **Terminal function**

Pin No.	Pin name	I/O	Function	Pin No.	Pin name	I/O	Function
1	S31/BP7	–	Open (not use).	46	P20/PT0	I	Encoder input.
2~20	S30~S12	O	LCD output (S1~S19).	47	P21	I	Encoder input.
21	COM0	O	LCD COM1 output.	48	P22/PCL	–	+5V.
22	COM1	O	LCD COM0 output.	49	P23/BUZ	–	GND.
23, 24	COM2, COM3	–	Open (not use).	50~52	P30~P32	–	Open (not use).
25	BIAS	O	LCD power supply voltage.	53	P33	O	Output for setting of AUX function.
26~28	VLC0~VLC2	–	LCD voltage level generator.	54~57	P80~P83	–	Open (not use).
29	P40	I	SCAN SW input.	58~63	AN1~AN5	–	GND.
30	P41	I	MON SW input.	64	AVss	–	GND.
31	P42	I	OPT SW input.	65~67		–	+5V.
32	P43	I	D/A SW input.	68	XT2	–	Open (not use).
33	Vss	–	GND.	69	NC (VPP)	–	+5V.
34~37	P50~P53	–	Open (not use).	70, 71	X1, X2	I	System CLOCK input.
38	P00/INT4	I	HOOK SW input.	72	RESET	I	System reset input.
30~41	P01~P03	–	GND.	73	P60/KR0	I	PTT SW input.
42	P10/INT0	I	Encoder interrupt input.	74	P61/KR1	I	HOOK SW input.
43	P11/INT1	I	PTT SW input.	75	P62/KR2	–	Open (not use).
44	P12/INT2	I	CLOCK input.	76	P63/KR3	I/O	Internal interface input/output.
45	P13/TI0	–	GND.	77~80	P70~P73	–	Open (not use).

SEMICONDUCTOR DATA

CPU : 75328GC5563B9 (Display Unit X54-3110 : KCH-4 IC1)

- **Terminal connection diagram**

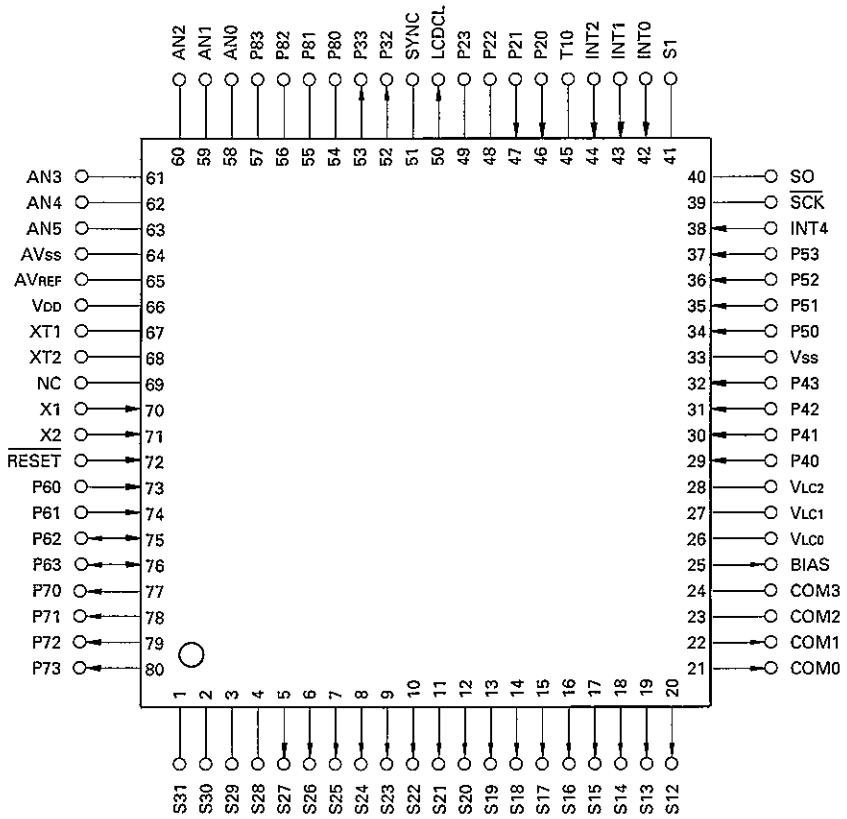

- **Terminal function**

Pin No.	Pin name	I/O	Function	Pin No.	Pin name	I/O	Function
1~4	S31~S28	–	Open (not use).	47	P21	I	Encoder input.
5~20	S27~S12	O	LCD output (S1~S16).	48, 49	P22, P23	–	GND.
21	COM0	O	LCD COM0 output.	50	P30/LCDCL	O	CLOCK output (MSM5265GS).
22	COM1	O	LCD COM1 output.	51	P31	–	GND.
23, 24	COM2, COM3	–	Open (not use).	52	P32	O	EEPROM (X24C04PI) CLOCK output.
25	BIAS	O	LCD power supply voltage.	53	P33	O	Output for setting of AUX function.
26~28	VLC1~VLC2	–	LCD voltage level generator.	54~57	P80~P83	–	Open (not use).
29	P40	I	MON SW input.	58~63	AN0~AN5	–	GND.
30	P41	I	SCAN SW input.	64	AVss	–	GND.
31	P42	I	KEY4 SW input.	65~67		–	+5V.
32	P43	I	KEY3 SW input.	68	XT2	–	Open (not use).
33	Vss	–	GND.	69	NC (Vpp)	–	+5V.
34	P50	I	KEY2 SW input.	70	X1	I	System CLOCK input.
35	P51	I	KEY1 SW input.	71	X2	I	System CLOCK input.
36	P52	I	DOWN SW input.	72	RESET	I	System reset input.
37	P53	I	UP SW input.	73	P60/KR0	I	PTT SW input
38	P00/INT4	I	HOOK SW input.	74	P61/KR1	I	HOOK SW input.
39~41	P01~P03	–	GND.	75	P62/KR2	I/O	EEPROM (X24C04PI) serial data input/output.
42	P10/INT0	I	Encoder interrupt input.	76	P63/KR3	I/O	Internal interface input/output.
43	P11/INT1	I	PTT SW input.	77	P70/KR4	O	LCD driver (MSM5265GS) BLANK output.
44	P12/INT2	I	CLOCK input.	78	P71/KR5	O	LCD driver (MSM5265GS) DATA output.
45	P13/TI0	–	GND.	79	P72/KR6	O	LCD driver (MSM5265GS) CLOCK output.
46	P20/PT0	I	Encoder input.	80	P73/KR7	O	LCD driver (MSM5265GS) LOAD output.

DESCRIPTION OF COMPONENTS

FINAL UNIT (X45-3740-XX) (D/4) -13 : K,M -14 : K2,M2 -15 : K3 -16 : K4,M4

Ref. No.	Part No.	Use/Function	Operation/Condition
IC1	M57788H	Power amplifier	For TK-830/(B)/(D) F1 only.
	M57788UH		For TK-830/(B)/(D) F2 only.
	M57788SH		For TK-830/(B)/(D) F3 only.
	M57788L		For TK-830/(B)/(D) F4 only.
Q1	2SD1682(R,S)	APC driver	
Q2	2SA1162(Y)	DC amplifier	APC controller.
Q3	FMW1	DC amplifier	APC controller.
D1	UM9401	TX/RX switching	
D2,3	MI308	TX/RX switching	
D4	HSM88AS	Forward wave rectification	
D5	HSM88AS	Reflected wave rectification	
D6	1SS184	COM biner	
D7	ERZ-M10DK220	Surge absorption	
D8	DSA3A1	Protection of reverse connection	

CONTROL UNIT (X57-3740-XX) (A/4) -13 : K,M -14 : K2,M2 -15 : K3 -16 : K4,M4

Ref. No.	Part No.	Use/Function	Operation/Condition
IC101	TC4013BF	D-FF	Phase difference detection.
IC102	L78LR05B-FA	AVR	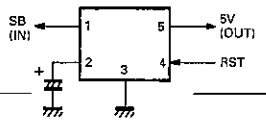
IC103	KCE04	MIC amplifier, AF BPF, AF VOL, SQ	
IC104,105	BU4094BF	Shift register	
IC106	78312AGF3343BE	CPU	
IC107	TC74HC573AF	Latch	Separate from multiplexer address/data bus output.
IC108	27C256BQ-JBY3	EPROM	
IC109	X24C04PI	EEPROM	
Q101	DTA114EK	DC switch	ON when the power switch is held down.
Q102	DTA114EK	DC switch	ON when the power switch on.
Q103,104	DTD114EK	DC switch	ON when the power switch on.
Q105	DTC114EK	DC switch	Reset (IC106) when the power switch off.
Q106	2SC2712(Y)	DC switch	Reset (IC106) when the power switch off.
Q107	2SD1757K	Muting switch	OFF when busy.
Q108	DTC114EK	Muting switch	OFF when RX.
Q109	DTC114EK	Muting switch	OFF when PTT switch on.
Q110	DTC114EK	PTT switch	ON when PTT switch on.
Q111	DTC114EK	HOOK switch	ON when on hook.
Q112	DTC114EK	SQ level shifter	8V → 5V.
Q114	DTC114EK	DC switch	ON when 24V input → Q104 off.
Q115	DTC114EK	Beep switch	
Q116	DTD114EK	DC switch	ON when AUX key on.
D101	02CZ18(X,Y)	Voltage reference	
D102	1SS181	Reverse current prevention	
D103	1SS184	DC switch	
D104	02CZ5.6(X,Y)	Voltage reference	
D105	1SS184	Reverse current prevention	
D106	1SS184	DC switch	
D107~110	1SS226	Surge absorption	ON when 5V or more and 0V or less.
D111	1SS184	DC switch	
D112	02CZ15(X,Y)	Voltage reference	

DESCRIPTION OF COMPONENTS

TX-RX UNIT (X57-3740-XX) (B/4) -13 : K,M -14 : K2,M2 -15 : K3 -16 : K4,M4

Ref. No.	Part No.	Use/Function	Operation/Condition
IC301	MC3371D	IF system	1,2 : Oscillator (68.92MHz) 3 : Mixer output 4 : Vcc 5 : Limiter input 6,7 : Decoupling 8 : Quad input 9 : AF output 16 : Input (69.375MHz)
IC302	KCB06	Drive amplifier	
IC303	BU4094BF	Shift register	
IC304	NJM78L05UA	Voltage regulator	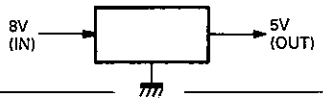
Q301	3SK184(S)	RF amplifier	
Q302	3SK140(GR)	RX 1st mixer	
Q303	2SC2714(Y)	RX 1st IF amplifier	69.375MHz.
Q304	2SB1119S	DC switch	RX : 8V, TX : 0V.
Q305	DTC114EK	DC switch	ON when RX.
Q306	2SB1119S	DC switch	RX : 0V, TX : 8V.
Q307	DTC114EK	DC switch	ON when TX.
Q308	DTC114EK	DC switch	Reset (shift register BU4094BF).
D301	HSM88AS	Protector	
D302	DAN235K	RF switch	Common VCO output.

AF UNIT (X57-3740-XX) (C/4) -13 : K,M -14 : K2,M2 -15 : K3 -16 : K4,M4

Ref. No.	Part No.	Use/Function	Operation/Condition
IC501	LA4491N	Audio power amplifier	
IC502	µPC78M08H	AVR	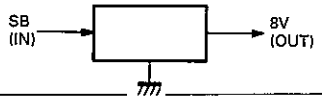
Q501	DTD114EK	Speaker switch	ON when PA SP switch on.
D501,502	1SS193	Reverse current prevention	
D503	1SS184	Protector	ON when the power switch off.

VCO/PLL UNIT (X58-3800-XX) -10 : K,M -11 : K2,M2 -12 : K3 -13 : K4,M4

Ref. No.	Part No.	Use/Function	Operation/Condition
IC1	MB1504PF	PLL system	1 : TCXO input 4 : 5V 7 : LD ("H" when lock) 8 : VCO output 9 (CLK), 10 (DAT), 11 (LE) : PLL data input 15 (P), 16 (R) : Charge pump output
Q1	2SC3356	RF amplifier	
Q2	2SC3120	Buffer amplifier	
Q3	2SA1162(Y)	Lock detect switch	"H" when lock.
Q4	DTC143EK	Lock detect switch	"H" when lock.
Q5	2SA1312(GR)	Charge pump	D/A converter.
Q6	2SC3324(G)	Charge pump	D/A converter.
Q51	2SK508NV(K52)	OSC	TX-VCO.
Q52	2SK508NV(K52)	OSC	RX-VCO.
Q53	2SC3120	Buffer amplifier	
Q54	DTC114EK	TX/RX switching	
Q55	FMG2	TX/RX switching	
D51	1SV164	Modulator	
D52,53	1T33C	Vari-cap diode	Frequency controller (TX-VCO).
D54,55	1T33C	Vari-cap diode	Frequency controller (RX-VCO).

DESCRIPTION OF COMPONENTS

DISPLAY UNIT (X54-3100-20) : KCH-3

Ref. No.	Part No.	Use/Function	Operation/Condition
IC1	75328GC5563B9	CPU, LCD dirver	
IC2	L78LR05B-FA	AVR	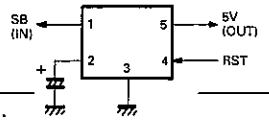
Q1	DTD114EK	LED or AUX switch	ON when AUX key on.
Q2	DTC114EK	DC switch	OFF when AUX key on.
D1~4	1SS226	Surge absorption	ON when 5V or more and 0V or less.
D5	1SS181	Encoder interrupt	
D6	B38-0322-05	LED assy	LCD back light.
ED1	B38-0353-05	LCD	

DISPLAY UNIT (X54-3110-20) : KCH-4

Ref. No.	Part No.	Use/Function	Operation/Condition
IC1	75328GC5563B9	CPU	
IC2	L78LR05B-FA	AVR	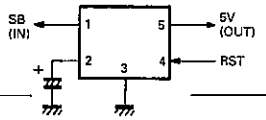
IC3	X24C04PI	EEPROM	
IC4	MSM5265GS-V1K	LCD driver	
Q1	DTD114EK	LED or AUX switch	ON when AUX key on.
Q2	2SC2873(Y)	DC switch	
Q3	FMC5	LED switch	OFF when AUX key on.
D1~4	1SS226	Surge absorption	ON when 5V or more and 0V or less.
D5	1SS181	Encoder interrupt.	
D6	02CZ10(X,Y)	Voltage reference	
D7	B38-0352-05	LED assy	LCD back light.
ED1	B38-0354-05	LCD	

PARTS LIST

* New Parts
Parts without Parts No. are not supplied.
Les articles non mentionnes dans le Parts No. ne sont pas fournis.
Teile ohne Parts No. werden nicht gellefert.

TK-830/(B)/(D)

Ref. No. 参照番号	Address 位置	New Parts 新	Parts No. 部品番号	Description 部品名／規格	Destination 仕向	Remarks 備考
			TK-830/(B)/(D)			
		*	212-3302-05	PLASTIC TUBU		A
1	1A		A01-2020-01	CASE(UPPER)		
2	3A	*	A01-2021-01	CASE(LOWER)		
3	2B	*	A10-1318-01	FRAME		
			A22-0776-02	SUB PANEL		A
			A22-0777-02	SUB PANEL		D
			A62-0063-03	PANEL		A
			A62-0064-03	PANEL ASSY		A
			A62-0066-03	PANEL		D
			A62-0067-03	PANEL ASSY		D
			B10-1162-04	FRONT GLASS		A
			B10-1163-04	FRONT GLASS		D
5	2A		B42-3343-04	LABEL(S/NO)		
6	1H		B46-0409-30	WARRANTY CARD	K-K4	
7	1H		B62-0069-00	INSTRUCTION MANUAL		
5	2A	*	B72-0123-04	MODEL NAME PLATE	KM	
5	2A	*	B72-0124-04	MODEL NAME PLATE	K2M2	
5	2A	*	B72-0208-04	MODEL NAME PLATE	K3	
5	2A	*	B72-0209-04	MODEL NAME PLATE	K4M4	
8	2A		E04-0167-05	RF COAXIAL CABLE RECEPTACLE		
9	2G		E30-2036-05	GROUND LEAD WIRE(HOOK)		
10	1G		E30-3068-05	DC CABLE ASSY		A
10	1G		E30-3068-05	DC CABLE ASSY		D
11	1A,2G		E31-3228-05	SHORT PLUG(ACC)		
			E31-3269-05	CONNECTING WIRE(RA,DO)		
12	1A	*	E37-0152-15	CONNECTING WIRE(2P)		
			E37-0153-05	FLEXIBLE PC BOARD(17P)		
			E37-0154-05	FLEXIBLE PC BOARD(13P)		
13	1A	*	E37-0155-05	CONNECTING WIRE(15P)		
			E37-0157-05	CONNECTING WIRE		A
			E37-0159-05	CONNECTING WIRE		A
14	2G		F05-1537-05	FUSE(15A)		A
14	2G		F05-1537-05	FUSE(15A)		D
15	2G		F07-1336-05	COVER		
16	3A	*	F10-1479-03	SHIELDING PLATE(FINAL)		
			F10-1480-03	SHIELDING PLATE(VCO/PLL)		
			F12-0417-04	SHIELDING SHEET(FRAME)		
		*	F12-0423-04	SHIELDING SHEET(FRAME)		
		*	F20-1109-04	INSULATING SHEET(FRAME)		
17	2A		G02-0574-04	LEAF SPRING(AVR)		
			G02-0576-14	LEAF SPRING(APC)		
18	2A		G02-0709-04	LEAF SPRING(AF.AMP)		
			G09-0405-05	SPRING		A
			G09-0405-05	SPRING		D
19	2B		G10-0707-14	NON-WOVEN FABRIC		
			G53-0509-04	PACKING		A
20	2A		G53-0712-03	PACKING		
21	1A	*	G53-0713-13	PACKING(CASE/UPPER)		
22	3A	*	G53-0714-03	PACKING(CASE/LOWWR)		
23	1H		H10-2575-04	POLYSTYRENE FOAMED FIXTURE		
24	2G	*	H10-2710-02	POLYSTYRENE FOAMED FIXTURE		

L:Scandinavia **K:**USA **P:**Canada **A :** TK-830
Y:PX(Far East, Hawaii) **T:**England **E:**Europe **B :** TK-830 (B)
Y:AAFES(Europe) **X:**Australia **M:**Other Areas **D :** TK-830 (D)

⚠ indicates safety critical components.

PARTS LIST

* New Parts
Parts without **Parts No.** are not supplied.
Les articles non mentionnes dans le **Parts No.** ne sont pas fournis.
Teile ohne **Parts No.** werden nicht geliefert.

TK-830/(B)/(D)
TX-RX UNIT (X57-3740-XX)

Ref. No. 参照番号	Address 位置	New Parts 新	Parts No. 部品番号	Description 部品名／規格			Destination 仕向	Remarks 備考
25	2G		H12-1399-04	PACKING FIXTURE,CARTON BOARD				
26	1G		H12-1403-04	PACKING FIXTURE,CARTON BOARD				
			H12-1434-04	PACKING FIXTURE,CARTON BOARD				B
			H25-0029-04	PROTECTION BAG				A
			H25-0029-04	PROTECTION BAG				D
			H25-0096-04	PROTECTION BAG				
27	2G		H25-0103-04	PROTECTION BAG(125X250)				
28	1H		H25-0194-04	PROTECTION BAG(RADIO)				
29	3G	*	H52-0078-04	ITEM CARTON BOX				
30	2G		J19-1376-15	HOLDER				A
30	2G		J19-1376-15	HOLDER				D
			J21-4340-04	MOUNTING HARDWARE				A
31	1A	*	J21-4341-04	MOUNTING HARDWARE				
32	2G		J29-0422-13	BLACKET				A
32	2G		J29-0422-13	BLACKET				D
33	2G		J61-0307-05	WIRE BAND				
			K29-4663-02	KEYTOP				A
			K29-4664-04	KNOB(VOL,CH)				A
			K29-4664-04	KNOB(VOL,CH)				D
			K29-4666-02	KEYTOP				D
34	2G		K29-4704-04	KNOB ASSY				D
			N09-2077-05	SCREW(IC1)				
			N32-3006-46	FLAT HEAD MACHINE SCREW				A
			N32-3006-46	FLAT HEAD MACHINE SCREW				D
			N35-3006-46	BINDING HEAD MACHINE SCREW				
			N35-3008-45	BINDING HEAD MACHINE SCREW				
			N87-2606-46	BRAZIER HEAD TAPTITE SCREW				
			N87-3008-46	BRAZIER HEAD TAPTITE SCREW				
35	2G		N99-0321-05	SCREW SET				A
35	2G		N99-0321-05	SCREW SET				D
			N99-0365-05	SCREW SET				B
			T07-0247-05	SPEAKER				A
36	1G		T91-0362-15	MICROPHONE				A
36	1G		T91-0362-15	MICROPHONE				D
			X54-3100-20	DISPLAY UNIT				A
			X54-3110-20	DISPLAY UNIT				D
45	1B,2A	*	X57-3740-13	TX.RX UNIT			KM	
45	1B,2A	*	X57-3740-14	TX.RX UNIT			K2M2	
45	1B,2A	*	X57-3740-15	TX.RX UNIT			K3	
45	1B,2A	*	X57-3740-16	TX.RX UNIT			K4M4	
TX-RX UNIT (X57-3740-XX) -13 : K, M -14 : K2, M2 -15 : K3 -16 : K4, M4								
C1			CE04EW1E470M	ELECTRO	47UF	25WV		
C2			CK73EB1H104K	CHIP C	0.10UF	K		
C3 -4			CK73FB1H471K	CHIP C	470PF	K		
C5			CE04EW1E470M	ELECTRO	47UF	25WV		
C6			CK73FB1H471K	CHIP C	470PF	K		
C7			CC45SL2H030C	CERAMIC	3.0PF	C	KMK2M2	
C7			CC45SL2H040C	CERAMIC	4.0PF	C	K3	
C7			CC45SL2H060C	CERAMIC	6.0PF	C	K4M4	
C8			CC45SL2H010C	CERAMIC	1.0PF	C	K2M2	
C8			CC45SL2H020C	CERAMIC	2.0PF	C	K3	
C8			CC45SL2H050C	CERAMIC	5.0PF	C	K4M4	
C9			CC45SL2H030C	CERAMIC	3.0PF	C	K2M2K3	
C9			CC45SL2H040C	CERAMIC	4.0PF	C	KM	

L:Scandinavia **K:**USA **P:**Canada. **A** : TK-830
Y:PX(Far East, Hawaii) **T:**England **E:**Europe **B** : TK-830 (B)
Y:AAFES(Europe) **X:**Australia **M:**Other Areas **D** : TK-830 (D)

⚠ indicates safety critical components.

PARTS LIST

× New Parts
Parts without Parts No. are not supplied.
Les articles non mentionnes dans le Parts No. ne sont pas fournis.
Teile ohne Parts No. werden nicht geliefert.

TX-RX UNIT (X57-3740-XX)

Ref. No. 参照番号	Address 位置	New Parts 新	Parts No. 部品番号	Description 部品名／規格			Destination 仕向	Remarks 備考
C9			CC45SL2H060C	CERAMIC	6.0PF	C	K4M4	
C10 ,11			CK73FB1H471K	CHIP C	470PF	K		
C12			CK45B2H102K	CERAMIC	1000PF	K		
C13			CC45SL2H060D	CERAMIC	6.0PF	D	K2M2K3	
C13			CC45SL2H060D	CERAMIC	6.0PF	D	K4M4	
C13			CC45SL2H070D	CERAMIC	7.0PF	D	KM	
C14			CC45SL2H050D	CERAMIC	5.0PF	D	K3K4M4	
C14			CC45SL2H060D	CERAMIC	6.0PF	D	KMK2M2	
C15			CC45SL2H050D	CERAMIC	5.0PF	D	K4M4	
C15			CC45SL2H050D	CERAMIC	5.0PF	D	K2M2K3	
C15			CC45SL2H060D	CERAMIC	6.0PF	D	KM	
C16			CC73FCH1H010C	CHIP C	1PF	C	K2M2	
C16			CC73FCH1H030C	CHIP C	3PF	C	KMK3	
C16			CC73FCH1H060D	CHIP C	6PF	D	K4M4	
C17			CC45SL2H040C	CERAMIC	4.0PF	C	K3	
C17			CC45SL2H050C	CERAMIC	5.0PF	C	KMK2M2	
C17			CC45SL2H060D	CERAMIC	6.0PF	D	K4M4	
C18			CC73FCH1H070D	CHIP C	7PF	D		
C19 -24			CK73FB1H471K	CHIP C	470PF	K		
C25			CC45SL2H030C	CERAMIC	3.0PF	C	K3	
C25			CC45SL2H050C	CERAMIC	5.0PF	C	KMK2M2	
C25			CC45SL2H020C	CERAMIC	2.0PF	C	K4M4	
C26			CC45SL2H040C	CERAMIC	4.0PF	C	K3	
C26			CC45SL2H060D	CERAMIC	6.0PF	D	KMK2M2	
C26			CC45SL2H060D	CERAMIC	6.0PF	D	K4M4	
C27 ,28			CK73FB1H471K	CHIP C	470PF	K		
C29			CE04EW1E101M	ELECTRO	100UF	25WV		
C30			C90-2021-05	ELECTRO	10UF	25WV		
C31 -34			CK73FB1H471K	CHIP C	470PF	K		
C35			C90-2165-05	ELECTRO	10UF	50WV		
C36 -38			CK73FB1H471K	CHIP C	470PF	K		
C39 ,40			CE04EW1E471M	ELECTRO	470UF	25WV		
C41			CK73FB1H471K	CHIP C	470PF	K		
C101			CK73FB1E104K	CHIP C	0.10UF	K		
C102			CE04EW1E470M	ELECTRO	47UF	25WV		
C103			CK73FB1H102K	CHIP C	1000PF	K		
C104,105			C92-0007-05	CHIP TAN	2.2UF	10WV		
C106			CK73FB1H102K	CHIP C	1000PF	K		
C107			CE04EW1E100M	ELECTRO	10UF	25WV		
C108			CE04EW1E470M	ELECTRO	47UF	25WV		
C109			CK73FB1H102K	CHIP C	1000PF	K		
C110			C92-0003-05	CHIP TAN	0.47UF	25WV		
C111			CE04EW1C470M	ELECTRO	47UF	16WV		
C112			CK73FB1H102K	CHIP C	1000PF	K		
C113			CK73FB1E103K	CHIP C	0.01UF	K		
C114			C92-0004-05	ELECTRO	1.0UF	16WV		
C115			CK73FB1E104K	CHIP C	0.10UF	K		
C116			CE04EW1C470M	ELECTRO	47UF	16WV		
C117			CK73FB1H102K	CHIP C	1000PF	K		
C118			C92-0008-05	CHIP TAN	3.3UF	16WV		
C119			CK73EF1C105Z	CHIP C	1.0UF	Z		
C120			C92-0007-05	CHIP TAN	2.2UF	10WV		
C121			CK73FB1E104K	CHIP C	0.10UF	K		
C122			CE04EW1C470M	ELECTRO	47UF	16WV		
C123			CK73FB1H102K	CHIP C	1000PF	K		

L:Scandinavia K:USA P:Canada A : TK-830
Y:PX(Far East, Hawaii) T:England E:Europe B : TK-830 (B)
Y:AAFES(Europe) X:Australia M:Other Areas D : TK-830 (D)

⚠ indicates safety critical components.

PARTS LIST

⁎ New Parts
Parts without Parts No. are not supplied.
Les articles non mentionnes dans le Parts No. ne sont pas fournis.
Teile ohne Parts No. werden nicht gellefert.

TX-RX UNIT (X57-3740-XX)

Ref. No. 参照番号	Address 位置	New Parts 新	Parts No. 部品番号	Description 部品名／規格	Destination 仕向	Remarks 備考
C124			CK73EF1C105Z	CHIP C 1.0UF Z		
C125			CK73FB1E104K	CHIP C 0.10UF K		
C126			CK73FB1H102K	CHIP C 1000PF K		
C127,128			CK73FB1E103K	CHIP C 0.01UF K		
C129			CK73FB1H102K	CHIP C 1000PF K		
C130			CE04EW1C101M	ELECTRO 100UF 16WV		
C131			CK73FB1H471K	CHIP C 470PF K		
C132,133			CK73FB1H102K	CHIP C 1000PF K		
C134,135			CC73FCH1H100D	CHIP C 10PF D		
C136			CK73FB1E104K	CHIP C 0.10UF K		
C137-138			CK73FB1E103K	CHIP C 0.01UF K		
C139			CK73FB1E104K	CHIP C 0.10UF K		
C140			CK73FB1H471K	CHIP C 470PF K		
C141-143			CK73FB1E103K	CHIP C 0.01UF K		
C144,145			CK73FB1H102K	CHIP C 1000PF K		
C147-149			CK73FB1H102K	CHIP C 1000PF K		
C150			CC73FSL1H101J	CHIP C 100PF J		
C151-154			CK73FB1H102K	CHIP C 1000PF K		
C155-158			CC73FSL1H101J	CHIP C 100PF J		
C159			CK73FB1H102K	CHIP C 1000PF K		
C160			CC73FSL1H101J	CHIP C 100PF J		
C161,162			CK73FB1H102K	CHIP C 1000PF K		
C164-166			CK73FB1H102K	CHIP C 1000PF K		
C167,168			CC73FSL1H101J	CHIP C 100PF J		
C169-173			CK73FB1H102K	CHIP C 1000PF K		
C183			CK73FB1H102K	CHIP C 1000PF K		
C185-193			CK73FB1H102K	CHIP C 1000PF K		
C195,196			CC73FSL1H101J	CHIP C 100PF J		
C197			CK73FB1E103K	CHIP C 0.01UF K		
C198,199			CC73FSL1H101J	CHIP C 100PF J		
C200-206			CK73FB1H102K	CHIP C 1000PF K		
C207-209			CC73FSL1H101J	CHIP C 100PF J		
C210			CK73FB1H102K	CHIP C 1000PF K		
C211			CC73FSL1H101J	CHIP C 100PF J		
C212-216			CK73FB1H102K	CHIP C 1000PF K		
C301			CC73FSL1H101J	CHIP C 100PF J		
C302			CC73FCH1H270J	CHIP C 27PF J		
C303			CC73FCH1H0R5C	CHIP C 0.5PF C	K3	
C304,305			CK73FB1H102K	CHIP C 1000PF K		
C306			CC73FSL1H101J	CHIP C 100PF J		
C308			CK73FB1H102K	CHIP C 1000PF K		
C309			CC73FCH1H050C	CHIP C 5PF C	KMK2M2	
C309			CC73FCH1H050C	CHIP C 5PF C	K3	
C309			CC73FCH1H070D	CHIP C 7PF D	K4M4	
C310			CK73FB1H471K	CHIP C 470PF K		
C311			CC73FCH1H220J	CHIP C 22PF J		
C312			CC73FSL1H101J	CHIP C 100PF J		
C313			CC73FCH1H030C	CHIP C 3PF C	K2M2K3	
C313			CC73FCH1H040C	CHIP C 4PF C	KMK4M4	
C314,315			CK73FB1E103K	CHIP C 0.01UF K		
C316			CC73FCH1H330J	CHIP C 33PF J		
C317			CK73FB1H102K	CHIP C 1000PF K		
C318-320			CC73FCH1H0R5C	CHIP C 0.5PF C		
C321			CC73FSL1H101J	CHIP C 100PF J		
C322			CK73FB1H102K	CHIP C 1000PF K		

L:Scandinavia K:USA P:Canada A : TK-830
Y:PX(Far East, Hawaii) T:England E:Europe B : TK-830 (B)
Y:AAFES(Europe) X:Australia M:Other Areas D : TK-830 (D)

⚠ indicates safety critical components.

PARTS LIST

× New Parts
Parts without Parts No. are not supplied.
Les articles non mentionnes dans le Parts No. ne sont pas fournis.
Teile ohne Parts No. werden nicht gellefert.

TX-RX UNIT (X57-3740-XX)

Ref. No. 参照番号	Address 位置	New Parts 新	Parts No. 部品番号	Description 部品名／規格			Destination 仕向	Remarks 備考
C323			CC73FCH1H100D	CHIP C	10PF	D		
C324			CC73FSL1H101J	CHIP C	100PF	J		
C325			CC73FCH1H100D	CHIP C	10PF	D		
C326			CK73FB1H102K	CHIP C	1000PF	K		
C327			CC73FCH1H180J	CHIP C	18PF	J		
C328,329			CK73FB1E104K	CHIP C	0.10UF	K		
C330			CK73FB1H102K	CHIP C	1000PF	K		
C331			C92-0009-05	CHIP TAN	4.7UF	10WV		
C332			CK73FB1E103K	CHIP C	0.01UF	K		
C333			C92-0009-05	CHIP TAN	4.7UF	10WV		
C334,335			CK73FB1H102K	CHIP C	1000PF	K		
C336,337			CC73FCH1H220J	CHIP C	22PF	J		
C338,339			CC73FSL1H101J	CHIP C	100PF	J		
C340			CK73FB1H102K	CHIP C	1000PF	K		
C341			CC73FSL1H101J	CHIP C	100PF	J		
C342-346			CK73FB1H102K	CHIP C	1000PF	K		
C347			CE04LW1C221M	ELECTRO	220UF	16WV		
C348			CK73FB1H102K	CHIP C	1000PF	K		
C349			C92-0007-05	CHIP TAN	2.2UF	10WV		
C350			CK73FB1E103K	CHIP C	0.01UF	K		
C351,352			CK73FB1H102K	CHIP C	1000PF	K		
C353			CE04EW1C101M	ELECTRO	100UF	16WV		
C354,355			CK73FB1H102K	CHIP C	1000PF	K		
C356-358			CK73FB1H471K	CHIP C	470PF	K		
C359-361			CK73FB1H102K	CHIP C	1000PF	K		
C362			CE04EW1C470M	ELECTRO	47UF	16WV		
C363,364			CK73FB1H102K	CHIP C	1000PF	K		
C365			CK73FB1E104K	CHIP C	0.10UF	K		
C366			CK73FB1H102K	CHIP C	1000PF	K		
C367			CE04EW1C101M	ELECTRO	100UF	16WV		
C368			CK73FB1E103K	CHIP C	0.01UF	K		
C369			CK73FB1H102K	CHIP C	1000PF	K		
C370			CK73FB1E103K	CHIP C	0.01UF	K		
C371,372			CK73FB1H102K	CHIP C	1000PF	K		
C501-504			CK73FB1H102K	CHIP C	1000PF	K		
C509			CE04EW1H0R1M	ELECTRO	0.1UF	50WV		
C510			CK73FB1E103K	CHIP C	0.01UF	K		
C511			C90-2024-05	ELECTRO	47UF	6.3WV		
C512			CE04EW1C101M	ELECTRO	100UF	16WV		
C513			CE04LW1C221M	ELECTRO	220UF	16WV		
C514			C90-2024-05	ELECTRO	47UF	6.3WV		
C515,516			CE04LW1C221M	ELECTRO	220UF	16WV		
C517,518			CQ92FM1H104K	MYLAR	0.10UF	K		
C519,520			CK73FB1H102K	CHIP C	1000PF	K		
C521-523			CK73FB1E103K	CHIP C	0.01UF	K		
C524			CE04EW1E471M	ELECTRO	470UF	25WV		
TC401			C05-0348-05	TRIM CAP		10PF		
			E02-2010-05	TRANSISTOR SOCKET(8P)				
			E02-2015-05	TRANSISTOR SOCKET(28P)				
CN1 ,2			E04-0154-05	RF COAXIAL CABLE RECEPTACLE				
CN3		*	E23-0902-05	TERMINAL(+B)				
CN101			E40-5491-05	PIN CONNECTOR(17P)				
CN102			E40-5470-05	PIN CONNECTOR(13P)				
CN103			E40-3269-05	PIN CONNECTOR(11P)				

L:Scandinavia K:USA P:Canada A : TK-830
Y:PX(Far East, Hawaii) T:England E:Europe B : TK-830 (B)
Y:AAFES(Europe) X:Australia M:Other Areas D : TK-830 (D)

⚠ indicates safety critical components.

PARTS LIST

* New Parts
Parts without Parts No. are not supplied.
Les articles non mentionnes dans le Parts No. ne sont pas fournis.
Telle ohne Parts No. werden nicht geliefert.

TX-RX UNIT (X57-3740-XX)

Ref. No. 参照番号	Address 位置	New Parts 新	Parts No. 部品番号	Description 部品名／規格	Destination 仕向	Remarks 備考
CN104			E40-3243-05	PIN CONNECTOR(8P)		
CN105			E40-3242-05	PIN CONNECTOR(7P)		
CN106			E40-3253-05	PIN CONNECTOR(9P)		
CN107			E40-3251-05	PIN CONNECTOR(7P)		
CN108			E40-3256-05	PIN CONNECTOR(12P)		
CN301			E04-0154-05	RF COAXIAL CABLE RECEPTACLE		
CN302			E40-5492-05	PIN CONNECTOR(15P)		
CN303			E04-0154-05	RF COAXIAL CABLE RECEPTACLE		
CN304			E40-3239-05	PIN CONNECTOR(4P)		
CN305			E40-5470-05	PIN CONNECTOR(13P)		
CN306,307			E04-0154-05	RF COAXIAL CABLE RECEPTACLE		
CN501			E40-5491-05	PIN CONNECTOR(17P)		
CN502			E40-3238-05	PIN CONNECTOR(3P)		
W1		*	E37-0117-05	CONNECTING WIRE(3P)		
W2		*	E37-0277-05	FINISHED WIRE(+B)		
W3		*	E37-0116-05	CONNECTING WIRE(3P)		
W105			E37-0158-05	CONNECTING WIRE(11P)		
CF301			L72-0342-05	CERAMIC FILTER		
L1			L34-1113-05	COIL	KMK2M2	
L1			L34-1185-05	COIL	K3K4M4	
L2			L34-0908-05	COIL		
L3			L34-1039-05	COIL	K3	
L3			L34-1185-05	COIL	KMK2M2	
L3			L34-1185-05	COIL	K4M4	
L4 ,5			L34-1039-05	COIL		
L6			L34-0908-05	COIL		
L7			L34-1039-05	COIL		
L301			L79-0877-05	FILTER	KM	
L301			L79-0879-05	FILTER	K2M2	
L301			L79-0881-05	FILTER	K3	
L301			L79-0883-05	FILTER	K4M4	
L302			L40-1572-48	SMALL FIXED INDUCTOR(15N)	K3	
L302			L40-1872-48	SMALL FIXED INDUCTOR(18N)	KMK2M2	
L302			L40-2272-48	SMALL FIXED INDUCTOR(22N)	K4M4	
L303			L79-0878-05	FILTER	KM	
L303			L79-0880-05	FILTER	K2M2	
L303			L79-0882-05	FILTER	K3	
L303			L79-0884-05	FILTER	K4M4	
L304			L40-1072-48	SMALL FIXED INDUCTOR(10N)	KMK2M2	
L304			L40-1072-48	SMALL FIXED INDUCTOR(10N)	K3	
L304			L40-1572-48	SMALL FIXED INDUCTOR(15N)	K4M4	
L305			L40-1872-48	SMALL FIXED INDUCTOR(18N)	KM	
L305			L40-2272-48	SMALL FIXED INDUCTOR(22N)	K2M2K3	
L305			L40-3372-48	SMALL FIXED INDUCTOR(33N)	K4M4	
L306			L34-4213-05	COIL		
L307			L34-4214-05	COIL		
L308			L34-4213-05	COIL		
L309			L40-4782-48	SMALL FIXED INDUCTOR(.47U)		
L310			L30-0503-05	IFT		
L311			L40-1001-48	SMALL FIXED INDUCTOR(10U)		
L312			L40-2211-48	SMALL FIXED INDUCTOR(220U)		
L313			L40-1072-48	SMALL FIXED INDUCTOR(10N)		
X101			L77-1374-05	CRYSTAL RESONATOR(12MHZ)		
X301			L77-1450-05	CRYSTAL RESONATOR(68.92MHZ)		

L:Scandinavia K:USA P:Canada A : TK-830
Y:PX(Far East, Hawaii) T:England E:Europe B : TK-830 (B)
Y:AAFES(Europe) X:Australia M:Other Areas D : TK-830 (D)

⚠ indicates safety critical components.

PARTS LIST

× New Parts
Parts without Parts No. are not supplied.
Les articles non mentionnes dans le Parts No. ne sont pas fournis.
Teile ohne Parts No. werden nicht geliefert.

TX-RX UNIT (X57-3740-XX)

Ref. No. 参照番号	Address 位置	New Parts 新	Parts No. 部品番号	Description 部品名／規格	Destination 仕向	Remarks 備考
X302			L77-1466-15	CRYSTAL RESONATOR(12.8MHZ)		
XF301			L71-0415-05	CRYSTAL FILTER		
R1			R92-1214-05	CHIP R 120 J 1/2W		
R2			RK73FB2A680J	CHIP R 68 J 1/10W		
R3			RK73FB2A560J	CHIP R 56 J 1/10W	KMK2M2	
R3			RK73FB2A560J	CHIP R 56 J 1/10W	K3	
R3			RK73FB2A820J	CHIP R 82 J 1/10W	K4M4	
R4			RK73FB2A472J	CHIP R 4.7K J 1/10W	KMK2M2	
R4			RK73FB2A472J	CHIP R 4.7K J 1/10W	K3	
R4			RK73FB2A562J	CHIP R 5.6K J 1/10W	K4M4	
R6			RK73FB2A101J	CHIP R 100 J 1/10W		
R7			RK73FB2A221J	CHIP R 220 J 1/10W		
R8			RK73FB2A333J	CHIP R 33K J 1/10W		
R9			RK73FB2A221J	CHIP R 220 J 1/10W		
R91			R92-0670-05J	CHIP R 0 OHM	KM	
R92			R92-0670-05	CHIP R 0 OHM	K2M2	
R93			R92-0670-05	CHIP R 0 OHM	K3	
R94			R92-0670-05	CHIP R 0 OHM	K4M4	
R101			RK73FB2A471J	CHIP R 470 J 1/10W		
R102,103			RK73FB2A473J	CHIP R 47K J 1/10W		
R104			RK73FB2A105J	CHIP R 1.0M J 1/10W		
R105			R92-0670-05	CHIP R 0 OHM		
R106-108			RK73FB2A104J	CHIP R 100K J 1/10W		
R109			RK73FB2A103J	CHIP R 10K J 1/10W		
R110,111			RK73FB2A472J	CHIP R 4.7K J 1/10W		
R112			RK73FB2A223J	CHIP R 22K J 1/10W		
R113			RK73FB2A101J	CHIP R 100 J 1/10W		
R114,115			RK73FB2A271J	CHIP R 270 J 1/10W		
R116			RK73FB2A223J	CHIP R 22K J 1/10W		
R117			RK73FB2A104J	CHIP R 100K J 1/10W		
R118			RK73FB2A103J	CHIP R 10K J 1/10W		
R119			RK73FB2A473J	CHIP R 47K J 1/10W		
R120			RK73FB2A222J	CHIP R 2.2K J 1/10W		
R121			RK73FB2A562J	CHIP R 5.6K J 1/10W		
R122			RK73FB2A103J	CHIP R 10K J 1/10W		
R123			RK73FB2A183J	CHIP R 18K J 1/10W		
R124,125			RK73FB2A104J	CHIP R 100K J 1/10W		
R126			RK73FB2A183J	CHIP R 18K J 1/10W		
R127			RK73FB2A223J	CHIP R 22K J 1/10W		
R128			RK73FB2A102J	CHIP R 1.0K J 1/10W		
R129			RK73FB2A104J	CHIP R 100K J 1/10W		
R130,131			RK73FB2A102J	CHIP R 1.0K J 1/10W		
R132			RK73FB2A103J	CHIP R 10K J 1/10W		
R133			RK73FB2A224J	CHIP R 220K J 1/10W		
R134			RK73FB2A101J	CHIP R 100 J 1/10W		
R135-137			RK73FB2A473J	CHIP R 47K J 1/10W		
R138			RK73FB2A333J	CHIP R 33K J 1/10W		
R139-142			RK73FB2A473J	CHIP R 47K J 1/10W		
R143,144			RK73FB2A102J	CHIP R 1.0K J 1/10W		
R145-148			RK73FB2A473J	CHIP R 47K J 1/10W		
R149			RK73FB2A223J	CHIP R 22K J 1/10W		
R150			R92-0670-05	CHIP R 0 OHM		
R151,152			RK73FB2A682J	CHIP R 6.8K J 1/10W		
R153			RK73FB2A223J	CHIP R 22K J 1/10W		

L:Scandinavia K:USA P:Canada A : TK-830
Y:PX(Far East, Hawaii) T:England E:Europe B : TK-830 (B)
Y:AAFES(Europe) X:Australia M:Other Areas D : TK-830 (D)

⚠ indicates safety critical components.

PARTS LIST

⋇ New Parts
Parts without Parts No. are not supplied.
Les articles non mentionnes dans le Parts No. ne sont pas fournis.
Teile ohne Parts No. werden nicht gellefert.

TX-RX UNIT (X57-3740-XX)

Ref. No. 参照番号	Address 位置	New Parts 新	Parts No. 部品番号	Description 部品名／規格	Destination 仕向	Remarks 備考
R154			RK73FB2A473J	CHIP R 47K J 1/10W		
R155			RK73FB2A104J	CHIP R 100K J 1/10W		
R156			R92-0670-05	CHIP R 0 ΩHM		
R157			RK73FB2A473J	CHIP R 47K J 1/10W		
R158			RK73FB2A272J	CHIP R 2.7K J 1/10W		
R159			R92-0670-05	CHIP R 0 ΩHM		
R160			RK73FB2A104J	CHIP R 100K J 1/10W		
R161,162			RK73FB2A473J	CHIP R 47K J 1/10W		
R166			RK73FB2A103J	CHIP R 10K J 1/10W		
R167-169			RK73FB2A473J	CHIP R 47K J 1/10W		
R170			RK73FB2A220J	CHIP R 22 J 1/10W		
R301			RK73FB2A333J	CHIP R 33K J 1/10W		
R302			RK73FB2A101J	CHIP R 100 J 1/10W		
R303			RK73FB2A333J	CHIP R 33K J 1/10W		
R304			RK73FB2A104J	CHIP R 100K J 1/10W		
R305			RK73FB2A101J	CHIP R 100 J 1/10W		
R306			R92-0670-05	CHIP R 0 ΩHM		
R307			RK73FB2A101J	CHIP R 100 J 1/10W		
R308			RK73FB2A221J	CHIP R 220 J 1/10W		
R309			R92-0670-05	CHIP R 0 ΩHM		
R310			RK73FB2A222J	CHIP R 2.2K J 1/10W		
R311			RK73FB2A101J	CHIP R 100 J 1/10W		
R312			RK73FB2A222J	CHIP R 2.2K J 1/10W		
R313			RK73FB2A224J	CHIP R 220K J 1/10W		
R314			RK73FB2A102J	CHIP R 1.0K J 1/10W		
R315			R92-0670-05	CHIP R 0 ΩHM		
R316			RK73FB2A224J	CHIP R 220K J 1/10W		
R317			RK73FB2A223J	CHIP R 22K J 1/10W		
R318,319			RK73FB2A332J	CHIP R 3.3K J 1/10W		
R320			RK73FB2A101J	CHIP R 100 J 1/10W		
R321-323			R92-0670-05	CHIP R 0 ΩHM		
R324			RK73FB2A102J	CHIP R 1.0K J 1/10W		
R325			RK73FB2A271J	CHIP R 270 J 1/10W		
R326			RK73FB2A180J	CHIP R 18 J 1/10W		
R327			RK73FB2A271J	CHIP R 270 J 1/10W		
R328			R92-0685-05	CHIP R 22 J 1/2W		
R329			R92-0670-05	CHIP R 0 ΩHM		
R330,331			RK73FB2A100J	CHIP R 10 J 1/10W		
R332,333			R92-0670-05	CHIP R 0 ΩHM		
R334,335			RK73FB2A102J	CHIP R 1.0K J 1/10W		
R336			RK73FB2A103J	CHIP R 10K J 1/10W		
R337			RK73FB2A102J	CHIP R 1.0K J 1/10W	K3K4M4	
R337			RK73FB2A472J	CHIP R 4.7K J 1/10W	KMK2M2	
R338			RK73FB2A103J	CHIP R 10K J 1/10W		
R339			RK73FB2A104J	CHIP R 100K J 1/10W		
R340			RK73FB2A473J	CHIP R 47K J 1/10W		
R341-343			RK73FB2A102J	CHIP R 1.0K J 1/10W		
R344-346			RK73FB2A473J	CHIP R 47K J 1/10W		
R347			RK73FB2A223J	CHIP R 22K J 1/10W		
R349			R92-0670-05	CHIP R 0 ΩHM		
R350			RK73FB2A473J	CHIP R 47K J 1/10W		
R351			RK73FB2A472J	CHIP R 4.7K J 1/10W		
R352			RK73FB2A473J	CHIP R 47K J 1/10W		
R353			RK73FB2A472J	CHIP R 4.7K J 1/10W		
R354			RK73FB2A473J	CHIP R 47K J 1/10W		

L:Scandinavia K:USA P:Canada A : TK-830
Y:PX(Far East, Hawaii) T:England E:Europe B : TK-830 (B)
Y:AAFES(Europe) X:Australia M:Other Areas D : TK-830 (D)

⚠ indicates safety critical components.

PARTS LIST

* New Parts
Parts without Parts No. are not supplied.
Les articles non mentionnes dans le Parts No. ne sont pas fournis.
Teile ohne Parts No. werden nicht geliefert.

TX-RX UNIT(X57-3740-XX)

Ref. No. 参照番号	Address 位置	New Parts 新	Parts No. 部品番号	Description 部品名／規格	Destination 仕向	Remarks 備考
R355			RK73FB2A223J	CHIP R 22K J 1/10W		
R356,357			RK73FB2A102J	CHIP R 1.0K J 1/10W		
R401			R92-0670-05	CHIP R 0 ØHM	KM	
R402			R92-0670-05	CHIP R 0 ØHM	K2M2	
R403			R92-0670-05	CHIP R 0 ØHM	K3	
R404			R92-0670-05	CHIP R 0 ØHM	K4M4	
R501			RK73FB2A473J	CHIP R 47K J 1/10W		
R502			RK73FB2A562J	CHIP R 5.6K J 1/10W		
R503			RK73FB2A103J	CHIP R 10K J 1/10W		
R504			RK73FB2A105J	CHIP R 1.0M J 1/10W		
R505,506			RK73FB2A2R2J	CHIP R 2.2 J 1/10W		
R507			RK73FB2A102J	CHIP R 1.0K J 1/10W		
R508-510			RS14DB3F150J	FL-PRØØF RS 15 J 3W		
VR1			R12-6742-05	TRIMMING PØT.(22K)		
VR2			R12-6421-05	TRIM PØT. 4.7K		
VR101			R12-6738-05	TRIMMING PØT.(4.7K)		
VR102			R12-6744-05	TRIMMING PØT.(47K)		
VR301			R12-6742-05	TRIMMING PØT.(22K)		
VR302,303			R12-6748-05	TRIMMING PØT.(220K)		
W4			R92-1061-05	JUMPER REST 0 ØHM		
W101-104			R92-1061-05	JUMPER REST 0 ØHM		
W107			R92-1061-05	JUMPER REST 0 ØHM		
K501			S51-1420-05	RELAY(SP)		
K502			S76-0401-05	RELAY(PWR)		
D1			UM9401	DIØDE		
D2 ,3			MI308	DIØDE		
D4 ,5			HSM88AS	DIØDE		
D6			1SS184	DIØDE		
D7			ERZ-M10DK220	DIØDE		
D8			DSA3A1	DIØDE		
D101			02CZ18(X,Y)	DIØDE		
D102			1SS181	DIØDE		
D103			1SS184	DIØDE		
D104			02CZ5.6(X,Y)	DIØDE		
D105,106			1SS184	DIØDE		
D107-110			1SS226	DIØDE		
D111			1SS184	DIØDE		
D112			02CZ15(X,Y)	DIØDE		
D301			HSM88AS	DIØDE		
D302			DAN235K	DIØDE		
D501,502			1SS193	DIØDE		
D503			1SS184	DIØDE		
IC1		*	M57788H	IC(PØWER MØDULE)	KM	
IC1		*	M57788L	IC(PØWER MØDULE)	K4M4	
IC1		*	M57788SH	IC(PØWER MØDULE)	K3	
IC1		*	M57788UH	IC(PØWER MØDULE)	K2M2	
IC101			TC4013BF	IC(D FLIP-FLØP X2)		
IC102			L78LR05B-FA	IC		
IC103			KCE04	IC		
IC104,105			BU4094BF	IC(SHIFT/STØRE REGISTER)		
IC106		*	78312AGF3343BE	IC		
IC107			TC74HC573AF	IC(LATCH)		
IC108		*	27C256BQ-JBY3	IC		
IC109			X24C04PI	IC		

L:Scandinavia K:USA P:Canada A : TK-830
Y:PX(Far East, Hawaii) T:England E:Europe B : TK-830 (B)
Y:AAFES(Europe) X:Australia M:Other Areas D : TK-830 (D)

⚠ indicates safety critical components.

PARTS LIST

⋇ New Parts
Parts without Parts No. are not supplied.
Les articles non mentionnes dans le Parts No. ne sont pas fournis.
Teile ohne Parts No. werden nicht geliefert.

TX-RX UNIT (X57-3740-XX)
VCO/PLL UNIT (X58-3800-XX)

Ref. No. 参照番号	Address 位置	New Parts 新	Parts No. 部品番号	Description 部品名／規格	Destination 仕向	Remarks 備考
IC301			MC3371D	IC		
IC302			KCB06	IC(DRIVER)		
IC303			BU4094BF	IC(SHIFT/STORE REGISTER)		
IC304			NJM78L05UA	IC(VOLTAGE REGULATOR/ +5V)		
IC501			LA4491N	IC(AF POWER AMP)		
IC502			UPC78M08H	IC(VOLTAGE REGULATOR/ +8V)		
Q1			2SD1682(R,S)	TRANSISTOR		
Q2			2SA1162(Y)	TRANSISTOR		
Q3			FMW1	TRANSISTOR		
Q101,102			DTA114EK	DIGITAL TRANSISTOR		
Q103,104			DTD114EK	DIGITAL TRANSISTOR		
Q105			DTC114EK	DIGITAL TRANSISTOR		
Q106			2SC2712(Y)	TRANSISTOR		
Q107			2SD1757K	TRANSISTOR		
Q108-112			DTC114EK	DIGITAL TRANSISTOR		
Q114,115			DTC114EK	DIGITAL TRANSISTOR		
Q116			DTD114EK	DIGITAL TRANSISTOR		
Q301			3SK184(S)	FET		
Q302			3SK140(GR)	FET		
Q303			2SC2714(Y)	TRANSISTOR		
Q304			2SB1119S	TRANSISTOR		
Q305			DTC114EK	DIGITAL TRANSISTOR		
Q306			2SB1119S	TRANSISTOR		
Q307,308			DTC114EK	DIGITAL TRANSISTOR		
Q501			DTD114EK	DIGITAL TRANSISTOR		
TH101			157-203-55009	THERMISTER(20K)		
TH301			157-102-53003	THERMISTER(1K)		
Z301			X58-3800-10	VCO/PLL UNIT(Z301)	KM	
Z301			X58-3800-11	VCO/PLL UNIT(Z301)	K2M2	
Z301			X58-3800-12	VCO/PLL UNIT(Z301)	K3	
Z301		*	X58-3800-13	VCO/PLL UNIT(Z301)	K4M4	
			212-6010-05	PLASTIC TUBE		
VCO/PLL UNIT (X58-3800-XX) -10 : K, M -11 : K2, M2 -12 : K3 -13 : K4, M4						
C1			C92-0004-05	ELECTRO 1.0UF 16WV		
C2 -4			CK73FB1H102K	CHIP C 1000PF K		
C5 ,6			CC73FCH1H030C	CHIP C 3PF C		
C7 -9			CK73FB1H102K	CHIP C 1000PF K		
C10			CC73FCH1H050C	CHIP C 5PF C		
C11			CK73FB1H102K	CHIP C 1000PF K		
C12			C92-0004-05	ELECTRO 1.0UF 16WV		
C13			CK73FB1H102K	CHIP C 1000PF K		
C14			CK73FB1H471K	CHIP C 470PF K		
C15			CC73FSL1H101J	CHIP C 100PF J		
C16			CK73FB1H102K	CHIP C 1000PF K		
C17			C92-0004-05	ELECTRO 1.0UF 16WV		
C18			C92-0004-05	ELECTRO 1.0UF 16WV		
C19			CK73FB1H102K	CHIP C 1000PF K		
C20			C92-0001-05	CHIP TAN 0.1UF 35WV		
C21			C92-0004-05	ELECTRO 1.0UF 16WV		
C22			C92-0001-05	CHIP TAN 0.1UF 35WV		
C23 ,24			CK73FB1H102K	CHIP C 1000PF K		
C25			CK73FB1H471K	CHIP C 470PF K		
C26			CC73FCH1H020C	CHIP C 2.0PF C		

L:Scandinavia K:USA P:Canada A : TK-830
Y:PX(Far East, Hawaii) T:England E:Europe B : TK-830 (B)
Y:AAFES(Europe) X:Australia M:Other Areas D : TK-830 (D)

⚠ indicates safety critical components.

PARTS LIST

⁎ New Parts
Parts without Parts No. are not supplied.
Les articles non mentionnes dans le Parts No. ne sont pas fournis.
Teile ohne Parts No. werden nicht geliefert.

VCO/PLL UNIT (X58-3800-XX)

Ref. No. 参照番号	Address 位置	New Parts 新	Parts No. 部品番号	Description 部品名／規格	Destination 仕向	Remarks 備考
C51			CC73FCH1H0R5C	CHIP C 0.5PF C		
C52			CC73FCH1H120J	CHIP C 12PF J	K4M4	
C52			CC73FCH1H150J	CHIP C 15PF J	K3	
C52			CC73FCH1H180J	CHIP C 18PF J	K2M2	
C52			CC73FCH1H270J	CHIP C 27PF J	KM	
C53			CC73FCH1H040C	CHIP C 4PF C	K4M4	
C53			CC73FCH1H120J	CHIP C 12PF J	KMK2M2	
C53			CC73FCH1H120J	CHIP C 12PF J	K3	
C54			CC73FCH1H030C	CHIP C 3PF C	K4M4	
C54			CC73FCH1H100D	CHIP C 10PF D	K3	
C54			CC73FCH1H120J	CHIP C 12PF J	KMK2M2	
C55			CC73FCH1H040C	CHIP C 4PF C	K3K4M4	
C55			CC73FCH1H050C	CHIP C 5PF C	KMK2M2	
C56			CC73FCH1H080D	CHIP C 8PF D		
C57			CC73FCH1H100D	CHIP C 10PF D		
C58			CC73FCH1H0R5C	CHIP C 0.5PF C	K4M4	
C58			CC73FCH1H010C	CHIP C 1PF C	KMK2M2	
C58			CC73FCH1H010C	CHIP C 1PF C	K3	
C59			C92-0004-05	ELECTRO 1.0UF 16WV		
C60 -62			CK73FB1H102K	CHIP C 1000PF K		
C63			CC73FCH1H060D	CHIP C 6PF D	K3	
C63			CC73FCH1H080D	CHIP C 8PF D	K2M2	
C63			CC73FCH1H080D	CHIP C 8PF D	K4M4	
C63			CC73FCH1H100D	CHIP C 10PF D	KM	
C64			CC73FCH1H060D	CHIP C 6PF D	K4M4	
C64			CC73FCH1H100D	CHIP C 10PF D	KMK2M2	
C64			CC73FCH1H100D	CHIP C 10PF D	K3	
C66			CC73FCH1H040C	CHIP C 4PF C	K3	
C66			CC73FCH1H050C	CHIP C 5PF C	K2M2	
C66			CC73FCH1H050C	CHIP C 5PF C	K4M4	
C66			CC73FCH1H060D	CHIP C 6PF D	KM	
C67 ,68			CC73FCH1H100D	CHIP C 10PF D		
C69			CC73FCH1H010C	CHIP C 1PF C		
C70 -74			CK73FB1H102K	CHIP C 1000PF K		
C75			CC73FCH1H030C	CHIP C 3PF C		
C76			CK73FB1H102K	CHIP C 1000PF K		
C77			CC73FSL1H101J	CHIP C 100PF J		
C78			CK73FB1H102K	CHIP C 1000PF K		
C79			CC73FCH1H0R5C	CHIP C 0.5PF C	K2M2K3	
TC51			C05-0371-05	TRIM CAP 10PF		
CN1			E40-5493-05	PIN CONNECTOR(15P)		
CN51			E40-5494-05	PIN CONNECTOR(7P)		
			F10-1480-03	SHIELDING PLATE		
L1			L40-2272-48	SMALL FIXED INDUCTOR(22N)	KMK2M2	
L1			L40-2272-48	SMALL FIXED INDUCTOR(22N)	K3	
L1			L40-3372-48	SMALL FIXED INDUCTOR(33N)	K4M4	
L51 ,52			L40-1092-48	SMALL FIXED INDUCTOR(1U)		
L53			L34-2367-05	COIL(TX.VCO)	KMK2M2	
L53			L34-2367-05	COIL(TX.VCO)	K3	
L53			L34-2368-05	COIL(TX.VCO)	K4M4	
L54 -57			L40-1092-48	SMALL FIXED INDUCTOR(1U)		
L58			L34-2368-05	COIL(RX.VCO)	KMK2M2	
L58			L34-2368-05	COIL(RX.VCO)	K3	

L:Scandinavia K:USA P:Canada A : TK-830
Y:PX(Far East, Hawaii) T:England E:Europe B : TK-830 (B)
Y:AAFES(Europe) X:Australia M:Other Areas D : TK-830 (D)

⚠ indicates safety critical components.

PARTS LIST

⁎ New Parts
Parts without Parts No. are not supplied.
Les articles non mentionnes dans le Parts No. ne sont pas fournis.
Teile ohne Parts No. werden nicht geliefert.

VCO/PLL UNIT (X58-3800-XX)

Ref. No. 参照番号	Address 位置	New Parts 新	Parts No. 部品番号	Description 部品名／規格	Destination 仕向	Remarks 備考
L58			L34-2369-05	COIL(RX.VCO)	K4M4	
L59			L40-1592-48	SMALL FIXED INDUCTOR(1.5U)	KMK2M2	
L59			L40-1592-48	SMALL FIXED INDUCTOR(1.5U)	K3	
L59			L40-2292-48	SMALL FIXED INDUCTOR(2.2U)	K4M4	
L60			L40-1092-48	SMALL FIXED INDUCTOR(1U)		
L61			L40-2272-48	SMALL FIXED INDUCTOR(22N)	KMK2M2	
L61			L40-2272-48	SMALL FIXED INDUCTOR(22N)	K3	
L61			L40-3372-48	SMALL FIXED INDUCTOR(33N)	K4M4	
R1			RK73FB2A101J	CHIP R 100 J 1/10W		
R3			RK73FB2A330J	CHIP R 33 J 1/10W		
R4			RK73FB2A183J	CHIP R 18K J 1/10W		
R5			RK73FB2A682J	CHIP R 6.8K J 1/10W		
R6			RK73FB2A330J	CHIP R 33 J 1/10W		
R7			RK73FB2A471J	CHIP R 470 J 1/10W		
R8			RK73FB2A101J	CHIP R 100 J 1/10W		
R9			RK73FB2A183J	CHIP R 18K J 1/10W		
R10			RK73FB2A682J	CHIP R 6.8K J 1/10W		
R11 ,12			RK73FB2A330J	CHIP R 33 J 1/10W		
R13			RK73FB2A333J	CHIP R 33K J 1/10W		
R14			RK73FB2A104J	CHIP R 100K J 1/10W		
R15			RK73FB2A472J	CHIP R 4.7K J 1/10W		
R16			RK73FB2A332J	CHIP R 3.3K J 1/10W	KMK2M2	
R16			RK73FB2A332J	CHIP R 3.3K J 1/10W	K3K4M4	
R17			RK73FB2A102J	CHIP R 1.0K J 1/10W		
R18			RK73FB2A682J	CHIP R 6.8K J 1/10W		
R19			RK73FB2A473J	CHIP R 47K J 1/10W		
R20			RK73FB2A330J	CHIP R 33 J 1/10W		
R22			RK73FB2A102J	CHIP R 1.0K J 1/10W		
R23			RK73FB2A561J	CHIP R 560 J 1/10W		
R24			RK73FB2A222J	CHIP R 2.2K J 1/10W		
R25			RK73FB2A102J	CHIP R 1.0K J 1/10W		
R26			RK73FB2A103J	CHIP R 10K J 1/10W		
R27 ,28			R92-0670-05	CHIP R 0 OHM		
R29			RK73FB2A101J	CHIP R 100 J 1/10W		
R30			RK73FB2A102J	CHIP R 1.0K J 1/10W		
R51			RK73FB2A563J	CHIP R 56K J 1/10W	K4M4	
R51			RK73FB2A683J	CHIP R 68K J 1/10W	KMK3	
R51			RK73FB2A823J	CHIP R 82K J 1/10W	K2M2	
R52			RK73FB2A333J	CHIP R 33K J 1/10W		
R53 ,54			RK73FB2A101J	CHIP R 100 J 1/10W		
R55			RK73FB2A151J	CHIP R 150 J 1/10W		
R56			RK73FB2A101J	CHIP R 100 J 1/10W		
R57			RK73FB2A221J	CHIP R 220 J 1/10W		
R58			RK73FB2A682J	CHIP R 6.8K J 1/10W		
R59			RK73FB2A183J	CHIP R 18K J 1/10W		
R60			RK73FB2A330J	CHIP R 33 J 1/10W		
R61			RK73FB2A121J	CHIP R 120 J 1/10W		
R62			RK73FB2A472J	CHIP R 4.7K J 1/10W		
R63			R92-0670-05	CHIP R 0 OHM		
D51			1SV164	DIODE		
D52 -55			1T33C	DIODE		
IC1			MB1504PF	IC		
Q1			2SC3356	TRANSISTOR		
Q2			2SC3120	TRANSISTOR		

L:Scandinavia **K**:USA **P**:Canada **A** : TK-830
Y:PX(Far East, Hawaii) **T**:England **E**:Europe **B** : TK-830 (B)
Y:AAFES(Europe) **X**:Australia **M**:Other Areas **D** : TK-830 (D)

⚠ indicates safety critical components.

PARTS LIST

⋇ New Parts
Parts without Parts No. are not supplied.
Les articles non mentionnes dans le Parts No. ne sont pas fournis.
Teile ohne Parts No. werden nicht geliefert.

VCO/PLL UNIT (X58-3800-XX)

Ref. No. 参照番号	Address 位置	New Parts 新	Parts No. 部品番号	Description 部品名／規格	Destination 仕向	Remarks 備考
Q3			2SA1162(Y)	TRANSISTOR		
Q4			DTC143EK	DIGITAL TRANSISTOR		
Q5			2SA1312(GR)	TRANSISTOR		
Q6			2SC3324(G)	TRANSISTOR		
Q51 ,52			2SK508NV(K52)	FET		
Q53			2SC3120	TRANSISTOR		
Q54			DTC114EK	DIGITAL TRANSISTOR		
Q55			FMG2	TRANSISTOR		

L:Scandinavia **K:**USA **P:**Canada **A :** TK-830
Y:PX(Far East, Hawaii) **T:**England **E:**Europe **B :** TK-830 (B)
Y:AAFES(Europe) **X:**Australia **M:**Other Areas **D :** TK-830 (D)

⚠ indicates safety critical components.

PARTS LIST

× New Parts
Parts without Parts No. are not supplied.
Les articles non mentionnes dans le Parts No. ne sont pas fournis.
Teile ohne Parts No. werden nicht gellefert.

KCH-3
DISPLAY UNIT (X54-3100-20)

Ref. No. 参照番号	Address 位置	New Parts 新	Parts No. 部品番号	Description 部品名／規格	Destination 仕向	Remarks 備考
KCH-3						
201	2C	*	A22-0776-02	SUB PANEL		
202	1C	*	A62-0063-03	PANEL		
		*	A62-0064-03	PANEL ASSY		
205	2C	*	B10-1162-04	FRONT GLASS		
			B42-3317-04	LABEL(S/NO)		
		*	E37-0157-05	CONNECTING WIRE		
		*	E37-0159-05	CONNECTING WIRE		
211	1C		G09-0405-05	SPRING		
212	1C		G53-0509-04	PACKING		
214	2J	*	H10-2725-02	POLYSTYRENE FOAMED FIXTURE		
215	1I	*	H11-0847-04	POLYSTYRENE PLATE		
216	1J	*	H13-0854-04	PACKING FIXTURE		
217	2I		H25-0103-04	PROTECTION BAG		
218	3I	*	H52-0108-04	ITEM CARTON BOX		
220	3D	*	J21-4340-04	MOUNTING HARDWARE		
222	2C	*	K29-4663-02	KEY TOP		
223	1C	*	K29-4664-04	KNOB (VOL,CH)		
H	3C		N87-2606-46	BRAZIER HEAD TAPTITE SCREW		
J	3C,3D		N87-3008-46	BRAZIER HEAD TAPTITE SCREW		
225	2J		N99-0364-05	SCREW SET		
227	3D		T07-0247-05	LOUDSPEAKER(FULLRANGE)		
229	3C	*	X54-3100-20	DISPLAY UNIT		
			212-3302-05	PLASTIC TUBE		
DISPLAY UNIT (X54-3100-20)						
D6			B38-0322-05	LED ASSY		
ED1		*	B38-0353-05	LCD		
C1 -4			CC73FSL1H101J	CHIP C 100PF K		
C5			CC73FSL1H101J	CHIP C 100PF J		
C6 -11			CK73FB1H102K	CHIP C 1000PF K		
C12			CC73FSL1H101J	CHIP C 100PF J		
C13			CK73FB1H102K	CHIP C 1000PF K		
C14 ,15			CC73FSL1H101J	CHIP C 100PF J		
C16 -20			CK73FB1H102K	CHIP C 1000PF K		
C21 -25			CC73FSL1H101J	CHIP C 100PF J		
C26 ,27			CK73FB1H102K	CHIP C 1000PF K		
C28			C92-0003-05	CHIP TAN 0.47UF 25WV		
C29			CK73FB1H102K	CHIP C 1000PF K		
C30			C92-0038-05	ELECTRO 22UF 16WV		
C31			CK73FB1E103K	CHIP C 0.01UF K		
C32 ,33			CC73FSL1H101J	CHIP C 100PF J		
		*	E29-0497-04	CONNECTOR		
CN1			E40-3241-05	PIN CONNECTOR(6P)		
CN2			E40-3255-05	PIN CONNECTOR(11P)		
CN3			E40-3247-05	PIN CONNECTOR(3P)		
CN4			E40-3237-05	PIN CONNECTOR(2P)		
J1			E08-0673-05	RECTANGULAR RECEPTACLE(MIC)		
W1		*	E37-0118-05	CONNECTING WIRE		

L:Scandinavia K:USA P:Canada
Y:PX(Far East, Hawaii) T:England E:Europe
Y:AAFES(Europe) X:Australia M:Other Areas

⚠ indicates safety critical components.

PARTS LIST

× New Parts
Parts without Parts No. are not supplied.
Les articles non mentionnes dans le Parts No. ne sont pas fournis.
Teile ohne Parts No. werden nicht geliefert.

DISPLAY UNIT (X54-3110-20)

Ref. No. 参照番号	Address 位置	New Parts 新	Parts No. 部品番号	Description 部品名／規格	Destination 仕向	Remarks 備考
R1 ,2			RK73FB2A102J	CHIP R 1.0K J 1/10W		
R3			RK73FB2A681J	CHIP R 680 J 1/10W		
R4			RK73FB2A821J	CHIP R 820 J 1/10W		
R5			RK73FB2A561J	CHIP R 560 J 1/10W		
R6		*	R92-1281-05	FIXED RESISTOR 4.7		
R7			RK73FB2A821J	CHIP R 820 J 1/10W		
R8 -13			RK73FB2A102J	CHIP R 1.0K J 1/10W		
R14			RK73FB2A473J	CHIP R 47K J 1/10W		
R15 ,16		*	R92-1280-05	FIXED RESISTOR 390		
R17 ,18			RK73FB2A181J	CHIP R 180 J 1/10W		
R19 ,20			RK73FB2A152J	CHIP R 1.5K J 1/10W		
R21 ,22			RK73EB2B471J	CHIP R 470 J 1/8W		
R23 -26			RK73FB2A102J	CHIP R 1.0K J 1/10W		
R27 ,28			RK73FB2A473J	CHIP R 47K J 1/10W		
R29 -32			RK73FB2A101J	CHIP R 100 J 1/10W		
R33			R92-0670-05	CHIP R 0 OHM		
R34			RK73FB2A103J	CHIP R 10K J 1/10W		
R35			R92-0670-05	CHIP R 0 OHM		
R36			RK73FB2A473J	CHIP R 47K J 1/10W		
VR1		*	R05-3457-05	POTENTIOMETER(10KA)		
S1			S40-1420-05	PUSH SWITCH		
S2 -9		*	S70-0410-05	TACT SWITCH		
D1 -4			1SS226	DIODE		
D5			1SS181	DIODE		
D6			02CZ10(X,Y)	DIODE		
IC1			75328GC5563B9	IC		
IC2			L78LR05B-FA	IC		
IC3		*	X24C04PI	IC		
IC4			MSM5265GS-V1K	IC(LCD DRIVER)		
Q1			DTD114EK	DIGITAL TRANSISTOR		
Q2			2SC2873(Y)	TRANSISTOR		
Q3			FMC5	TRANSISTOR		
S10			W02-0393-05	ENCORDER		

L:Scandinavia **K:**USA **P:**Canada
Y:PX(Far East, Hawaii) **T:**England **E:**Europe
Y:AAFES(Europe) **X:**Australia **M:**Other Areas

⚠ indicates safety critical components.

EXPLODED VIEW

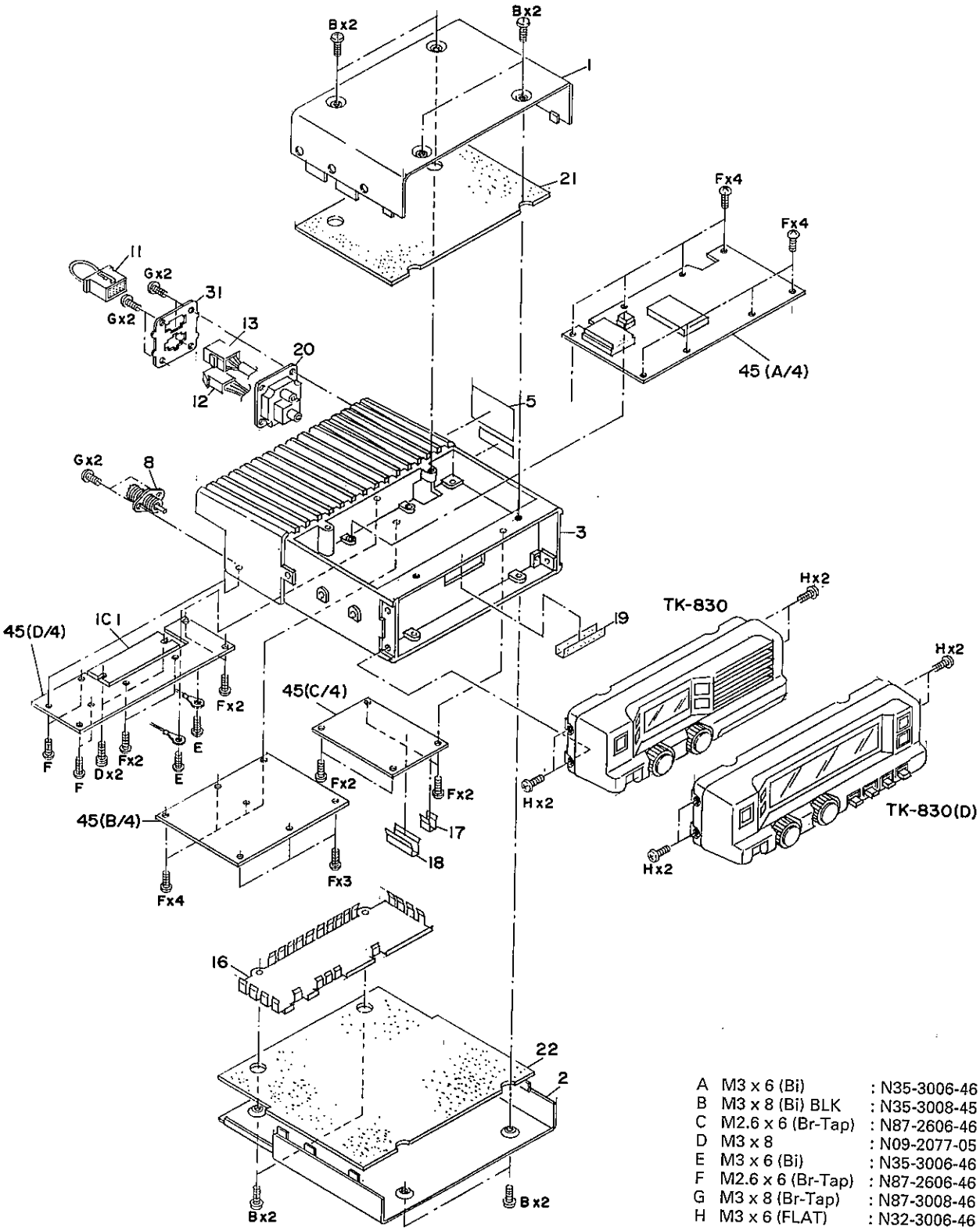

A	M3 x 6 (Bi)	: N35-3006-46
B	M3 x 8 (Bi) BLK	: N35-3008-45
C	M2.6 x 6 (Br-Tap)	: N87-2606-46
D	M3 x 8	: N09-2077-05
E	M3 x 6 (Bi)	: N35-3006-46
F	M2.6 x 6 (Br-Tap)	: N87-2606-46
G	M3 x 8 (Br-Tap)	: N87-3008-46
H	M3 x 6 (FLAT)	: N32-3006-46

TK-830/(B)/(D)

PACKING

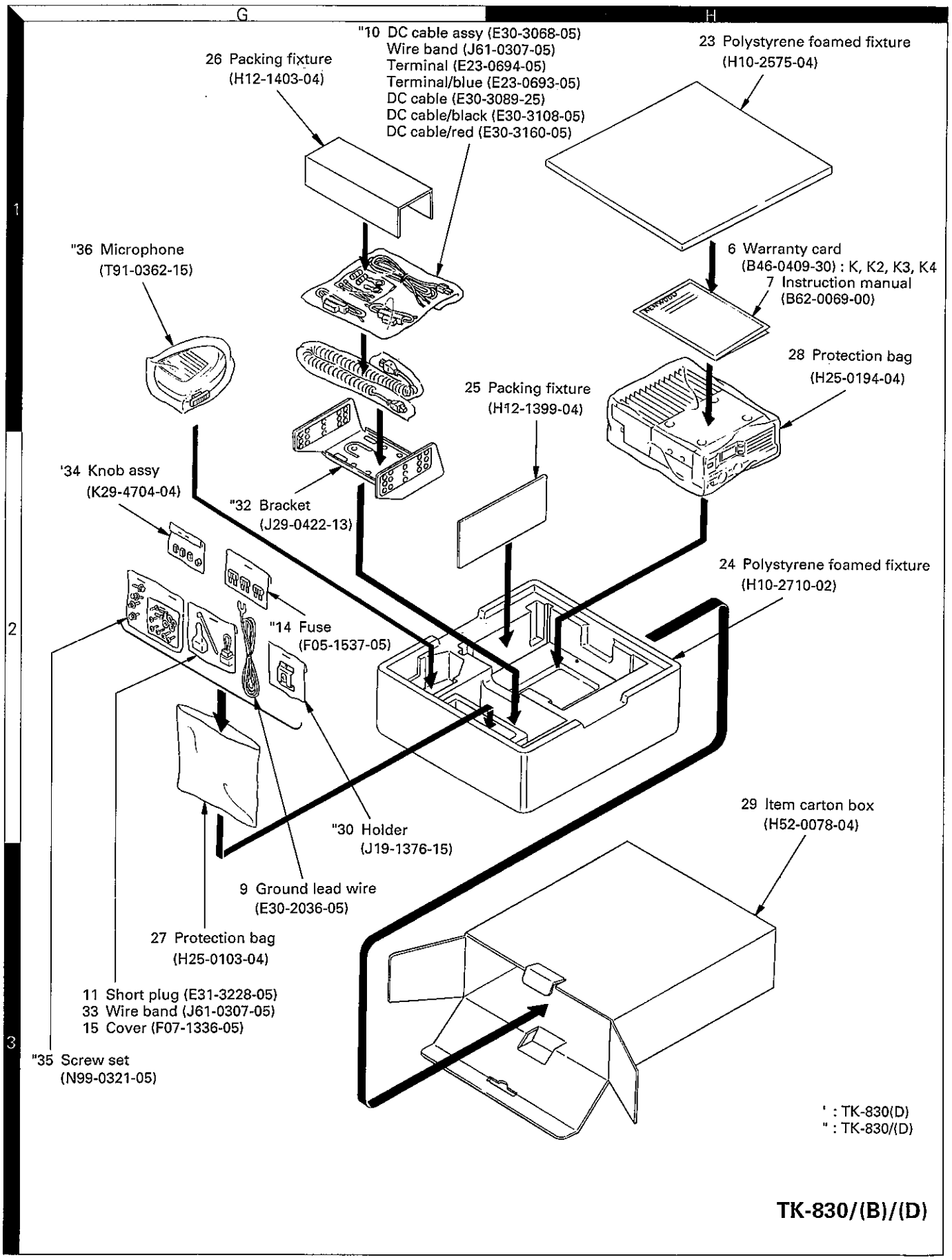
G
H
1
2
3
"10 DC cable assy (E30-3068-05)
Wire band (J61-0307-05)
Terminal (E23-0694-05)
Terminal/blue (E23-0693-05)
DC cable (E30-3089-25)
DC cable/black (E30-3108-05)
DC cable/red (E30-3160-05)
26 Packing fixture
(H12-1403-04)
23 Polystyrene foamed fixture
(H10-2575-04)
"36 Microphone
(T91-0362-15)
6 Warranty card
(B46-0409-30) : K, K2, K3, K4
7 Instruction manual
(B62-0069-00)
28 Protection bag
(H25-0194-04)
25 Packing fixture
(H12-1399-04)
'34 Knob assy
(K29-4704-04)
"32 Bracket
(J29-0422-13)
24 Polystyrene foamed fixture
(H10-2710-02)
"14 Fuse
(F05-1537-05)
29 Item carton box
(H52-0078-04)
"30 Holder
(J19-1376-15)
9 Ground lead wire
(E30-2036-05)
27 Protection bag
(H25-0103-04)
11 Short plug (E31-3228-05)
33 Wire band (J61-0307-05)
15 Cover (F07-1336-05)
"35 Screw set
(N99-0321-05)
' : TK-830(D)
" : TK-830/(D)
TK-830/(B)/(D)

PACKING

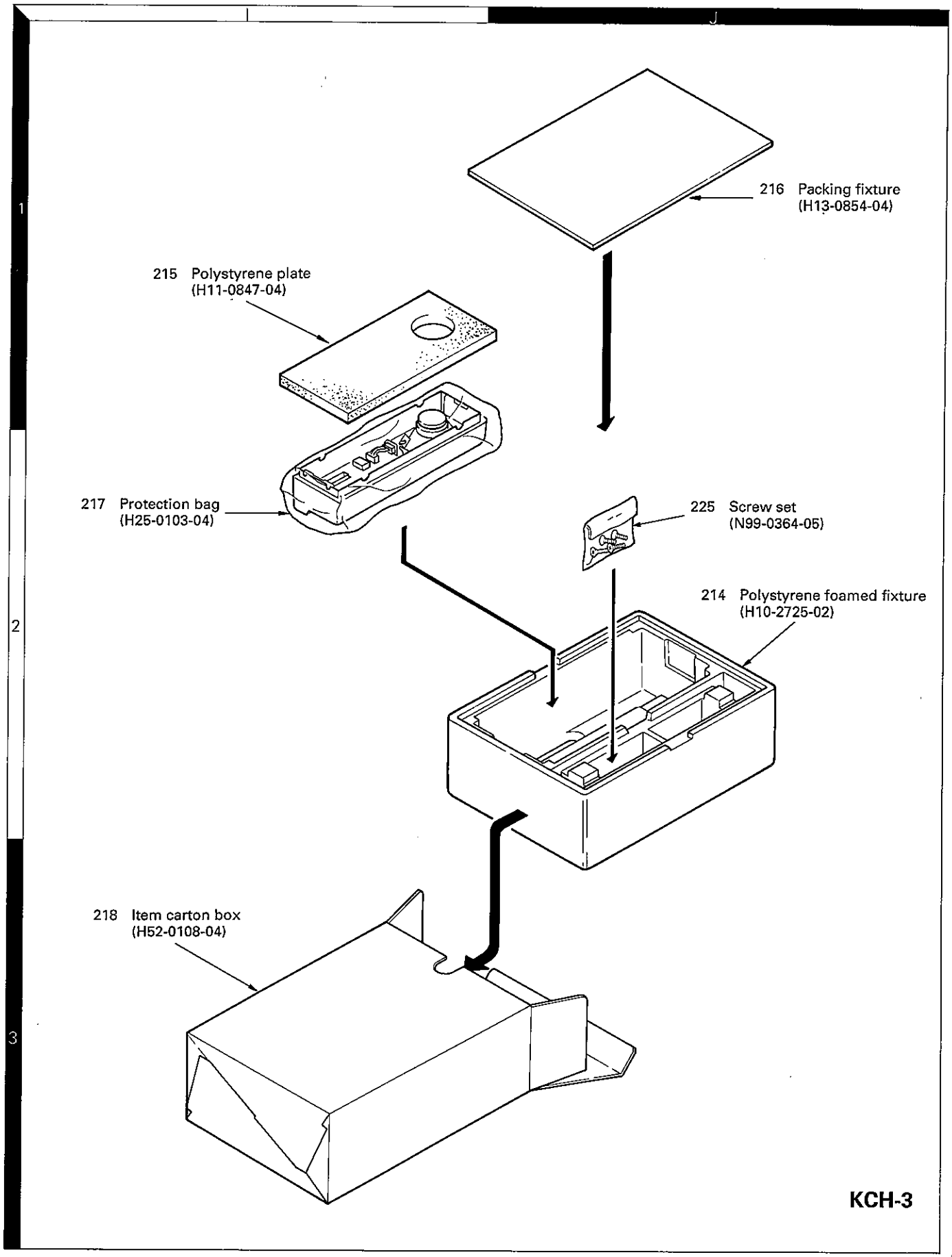
216 Packing fixture
(H13-0854-04)
215 Polystyrene plate
(H11-0847-04)
217 Protection bag
(H25-0103-04)
225 Screw set
(N99-0364-05)
214 Polystyrene foamed fixture
(H10-2725-02)
218 Item carton box
(H52-0108-04)
1
2
3
KCH-3

PACKING

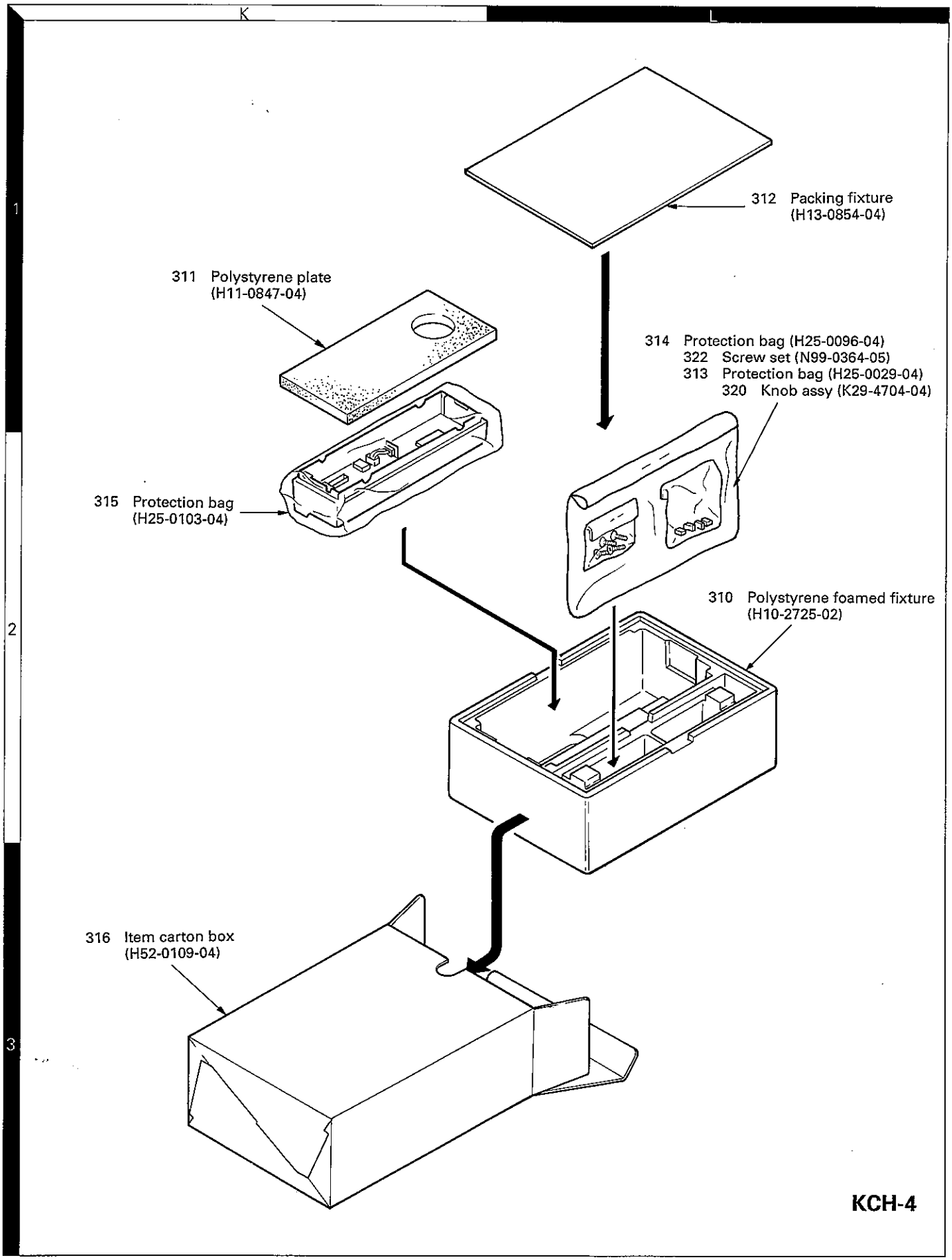
K
L
1
2
3
312 Packing fixture
(H13-0854-04)
311 Polystyrene plate
(H11-0847-04)
314 Protection bag (H25-0096-04)
322 Screw set (N99-0364-05)
313 Protection bag (H25-0029-04)
320 Knob assy (K29-4704-04)
315 Protection bag
(H25-0103-04)
310 Polystyrene foamed fixture
(H10-2725-02)
316 Item carton box
(H52-0109-04)
KCH-4

ADJUSTMENT

Test Equipment Required for Alignment

No.	Test Equipment	Major Specifications	
1	Standard Signal Generator (SSG)	Frequency Range Modulation Output	400 to 512MHz. Frequency modulation and external modulation. 0.1µV to greater than 1mV.
2	Power Meter	Input Impedance Operation Frequency Measurement Capability	50Ω. 400 to 512MHz or more. Vicinity of 100W.
3	Deviation Meter	Frequency Range	400 to 512MHz.
4	Digital Volt Meter (DVM)	Measuring Range Accuracy	1 to 20V DC. High input impedance for minimum circuit loading.
5	Oscilloscope		DC through 30MHz.
6	High Sensitivity Frequency Counter	Frequency Range Frequency Stability	10Hz to 600MHz. 0.2ppm or less.
7	Ammeter		15A.
8	AF Volt Meter (AFVTVM)	Frequency Range Voltage Range	50Hz to 10kHz. 3mV to 3V.
9	Audio Generator (AG)	Frequency Range Output	50Hz to 5kHz or more. 0 to 1V.
10	Distortion Meter	Capability Input Level	3% or less at 1kHz. 50mV to 10Vrms.
11	Voltmeter	Measuring Range Input Impedance	10 to 1.5V DC or less. 50kΩ/V or greater.
12	4Ω Dummy Load		Approx. 4Ω, 30W.
13	Regulated Power Supply		13.6V, approx. 15A (adjustable from 9 to 17 V). Useful if ammeter equipped.

Caution

Since the RX AF output is a BTL output, there is a DC component. Isolate this with a capacitor or transformer as shown in the figure.

MIC connector front view

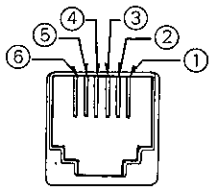

① SB
② PTTG
③ PTT
④ MICG
⑤ MIC
⑥ HOOK

- The following test cables are recommended.

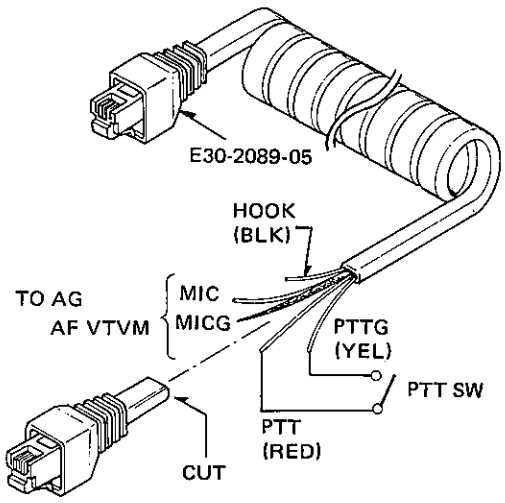

Test cable for Microphone input

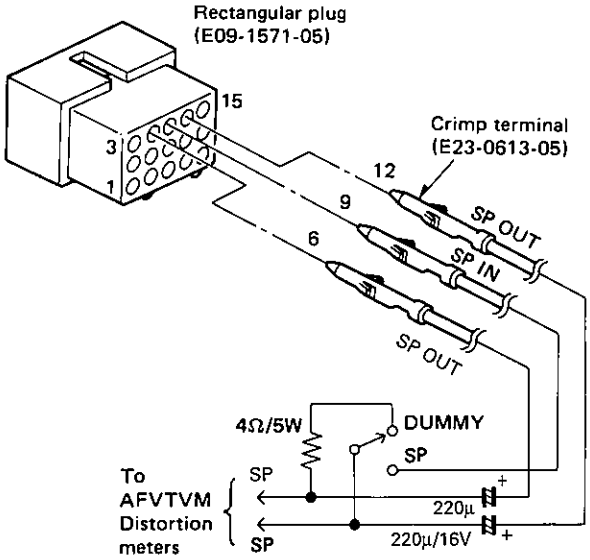

Test cable for Speaker output

ADJUSTMENT

Adjustment Points

- **Upper side**

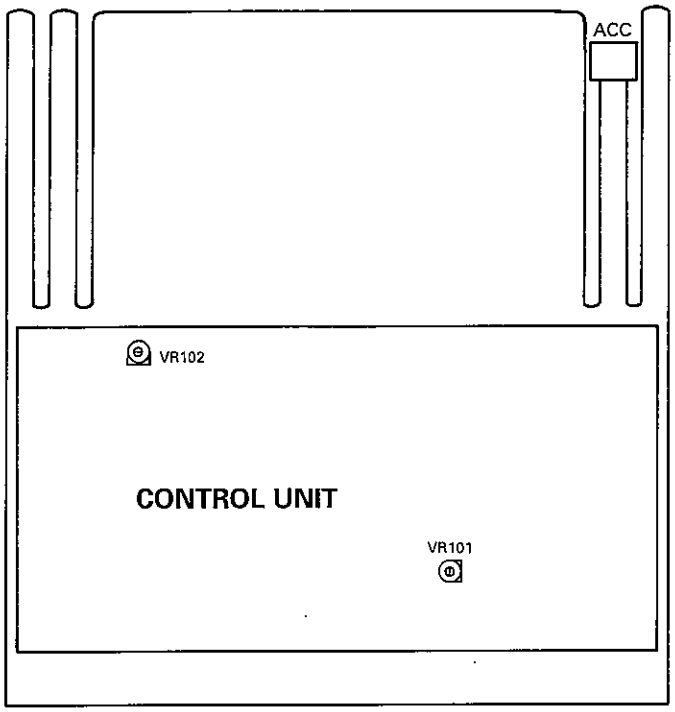

- **Lower side**

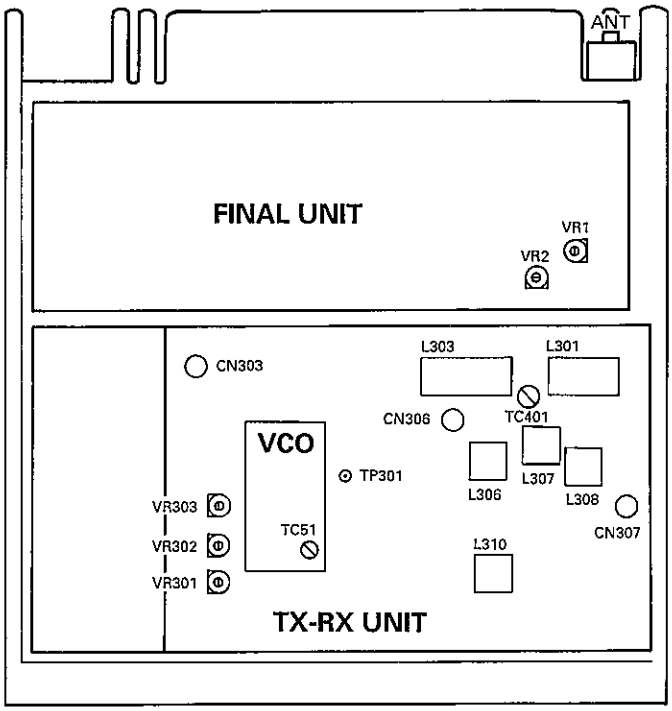

CONTROL UNIT
VR101 : MIC sensitivity
VR102 : Squelch

FINAL UNIT
VR1 : Power (APC)
VR2 : Power (APC)

TX-RX UNIT
L301, 303 : Helical
L306~308 : MCF
L310 : Sensitivity
VR301 : Maximum deviation
VR302 : DQT
VR303 : QT
TC401 : Helical

VCO/PLL
TC51 : PLL lock voltage

ADJUSTMENT

The set has been adjusted for the frequencies shown in the following table.
When required, re-adjust them following the adjustment procedure to obtain the frequencies you want in actual operation.

Test mode

		K, M	K2, M2	K3	K4, M4
CH1	f_{TX1} (MHz)	460.000	480.000	501.000	416.500
	f_{RX1} (MHz)	460.050	480.050	500.050	420.050
	TONE	–	–	–	–
CH2	f_{TX2} (MHz)	450.000	470.000	490.000	403.000
	f_{RX2} (MHz)	450.050	470.050	490.050	410.050
	TONE	–	–	–	–
CH3	f_{TX3} (MHz)	469.975	489.975	511.975	429.975
	f_{RX3} (MHz)	469.950	489.950	509.975	429.950
	TONE	–	–	–	–
CH4	f_{TX4} (MHz)	460.000	480.000	501.000	416.500
	f_{RX4} (MHz)	460.000	480.000	501.000	416.500
	TONE	DQT 754N	DQT 754N	DQT 754N	DQT 754N
CH5	f_{TX5} (MHz)	460.000	480.000	501.000	416.500
	f_{RX5} (MHz)	460.000	480.000	501.000	416.500
	TONE	QT 151.4Hz	QT 151.4Hz	QT 151.4Hz	QT 151.4Hz
CH6	f_{TX6} (MHz)	460.000	480.000	501.000	416.500
	f_{RX6} (MHz)	460.000	480.000	501.000	416.500
	TONE	QT 67.0Hz	QT 67.0Hz	QT 67.0Hz	QT 67.0Hz

		K, M	K2, M2	K3	K4, M4
CH7	f_{TX7} (MHz)	460.000	480.000	501.000	416.500
	f_{RX7} (MHz)	460.000	480.000	501.000	416.500
	TONE	QT 210.7Hz	QT 210.7Hz	QT 210.7Hz	QT 210.7Hz
CH8	f_{TX8} (MHz)	459.900	479.900	509.900	416.750
	f_{RX8} (MHz)	459.900	479.900	509.900	416.750
	TONE	–	–	–	–
CH9	f_{TX9} (MHz)	455.000	475.000	496.000	409.750
	f_{RX9} (MHz)	455.000	475.000	496.000	409.750
	TONE	QT 131.2Hz	QT 131.2Hz	QT 131.2Hz	QT 131.2Hz
CH10	f_{TX10} (MHz)	455.000	475.000	496.000	409.750
	f_{RX10} (MHz)	455.000	475.000	496.000	409.750
	TONE	DQT 023N	DQT 023N	DQT 023N	DQT 023N
CH11	f_{TX11} (MHz)	455.000	475.000	496.000	409.750
	f_{RX11} (MHz)	455.000	475.000	496.000	409.750
	TONE	QT 100.0Hz	QT 100.0Hz	QT 100.0Hz	QT 100.0Hz
CH12	f_{TX12} (MHz)	455.000	475.000	496.000	409.750
	f_{RX12} (MHz)	455.000	475.000	496.000	409.750
	TONE	DQT 444N	DQT 444N	DQT 444N	DQT 444N

The set frequency is subject to change without prior notice.

Alignment

Item	Condition	Measurement			Adjustment			Specifications/Remarks
		Test-equipment	Unit	Terminal	Unit	Parts	Method	
1. Setting	1) Connect the front panel (KCH-4) to the TK-830(B). 2) Front panel VR : MIN 3) Write in frequency designed with EEPROM writer. 4) Connect the power cable to the rear panel. 5) TX-RX unit VR301 and VR303 : Center 5) TX-RX unit VR1 and VR2 : MAX CW 6) Power SW : ON	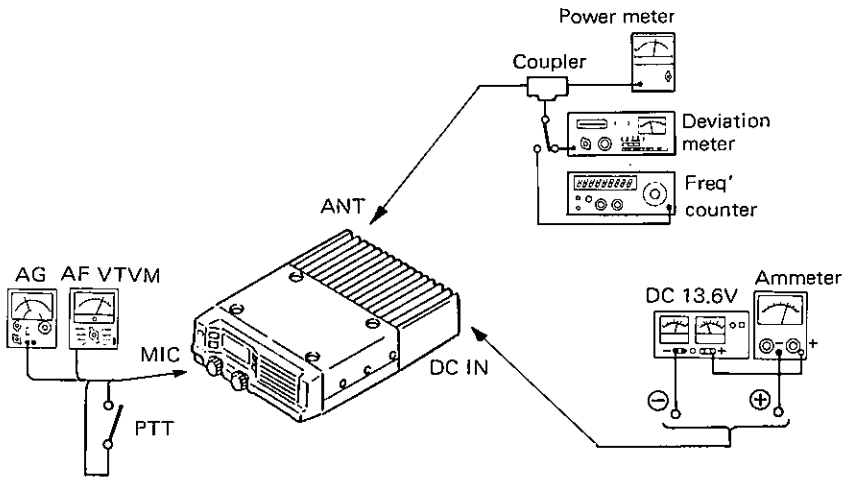						

ADJUSTMENT

Item	Condition	Measurement			Adjustment			Specifications/Remarks
		Test-equipment	Unit	Terminal	Unit	Parts	Method	
2. PLL lock voltage	1) CH : CH3 Receive	DVM	TX-RX	TP301	TX-RX	TC51 (Z301)	6.8V ADJ.	±0.1V
	2) CH : CH3 Transmit (PTT : ON)						Check	6.5V or less.
	3) CH : CH2 Receive							1.5V or less.
	4) CH : CH2 Transmit (PTT : ON)							1.5V or more.
3. Transmit frequency check	1) CH : CH1 ANT : Power meter PTT : ON	Power meter f. counter	Rear panel	ANT			Check	f_{TX1} ±690Hz **K,M** ±720Hz **K2,M2** ±750Hz **K3** ±625Hz **K4,M4**
4. Helical	1) CH : CH1 (RX) Spectrum analyzer SPAN : 50MHz, 2dB/DIV RBW : 300kHz Tracking generator output : –20dBm Center frequency (fo) : 460.00MHz **K,M** : 480.00MHz **K2,M2** : 501.00MHz **K3** : 416.50MHz **K4,M4**	Tracking generator Spectrum analyzer	Rear panel TX-RX	ANT CN306	TX-RX	L301 L303 TC401	Adjust it to make gain maximum, and make the band flat as shown in the right.	Ripple : Within 4dB 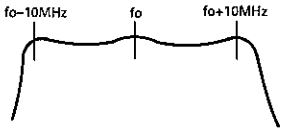
5. MCF	1) CH : CH1 (RX) Spectrum analyzer SPAN : 20kHz, 1dB/DIV RBW : 1kHz Tracking generator output : –20dBm Center frequency (fo) : 69.375MHz	Tracking generator Spectrum analyzer	TX-RX	CN306 CN307	TX-RX	L306 L307 L308	Adjust it to make gain maximum, and make the band flat as right.	Ripple (±10kHz) : –3dB or less 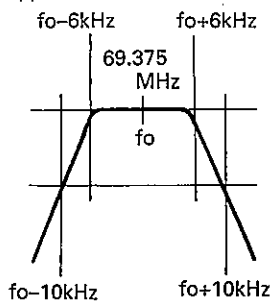
6. Power adjustment (APC)	1) CH : CH1 PTT : ON	Power meter Ammeter	Rear panel	ANT	Final	VR2	MAX CW	40W or more
							35W ADJ.	±2.0W, 8.5A or less.
						VR1	MAX CCW	5W, 8.5A or less.
							MAX CW	
7. DQT	1) CH : CH4 Deviation meter filter HPF : OFF LPF : 3kHz De-emphasis : OFF PTT : ON	Power meter Deviation meter Oscilloscope	Rear panel	ANT	TX-RX	VR302	Make the demodulation waveform neat.	
8. QT	1) CH : CH5 Deviation meter filter HPF : 50Hz LPF : 3kHz De-emphasis : 750μS PTT : ON					VR303	±0.75kHz	±50Hz

ADJUSTMENT

Item	Condition	Measurement			Adjustment			Specifications/Remarks
		Test-equipment	Unit	Terminal	Unit	Parts	Method	
9. Maximum deviation adjustment	1) CH : CH1 Connect AG to the MIC terminal. AG : 1kHz/50mV Deviation meter filter HPF : OFF LPF : 15kHz De-emphasis : 750μs PTT : ON	Power meter Deviation meter AF VTVM AG Oscilloscope	Rear panel	ANT	TX-RX	VR301	±4.2kHz Adjust one more than the other by switching between −P and +P.	±100Hz
10. MIC sensitivity adjustment	1) CH : CH1 Deviation meter filter HPF : OFF LPF : 15kHz De-emphasis : 750μs (P−P)/2 AG : 1kHz/5mV PTT : ON				CONT	VR101	±3.0kHz ADJ.	±250Hz
11. Sensitivity adjustment	1) CH : CH1	SSG AF VTVM Distortion meter Oscilloscope 4Ω dummy load	Rear panel	ANT ACC (EXT.SP)	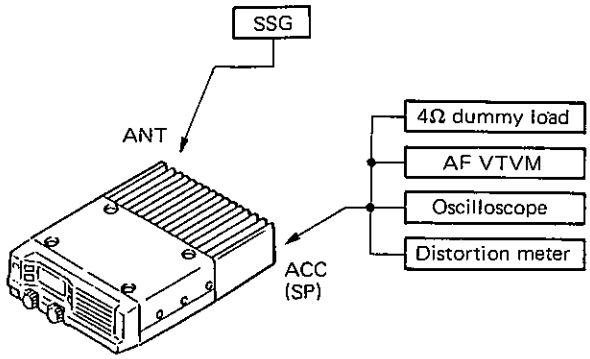			
	2) SSG frequency : fRX1 Output : 500μV/54dBμ/−53dBm MOD : 1kHz DEV : ±3kHz AF : 1.4V/4Ω				TX-RX	L310	Adjust for maximum AF output.	Distortion : 3% or less
	3) CH : CH1~CH3 SSG frequency : fRX1~fRX3 Output : 0.28μV/−11dBμ/−118dBm MOD : 1kHz DEV : ±3kHz						Check	SINAD 12dB or more
12. Squelch adjustment	1) CH : CH1 SSG frequency : fRX1 Output : Value when 3dB is subtracted from the sensitivity value of 12dB SINAD. MOD : 1kHz DEV : ±3kHz	SSG Distortion meter Oscilloscope	Rear panel	ANT ACC (EXT.SP)	CONT	VR102	Set to threshold point.	
	2) SSG output : 8dB SINAD						Check	Squelch open
	3) SSG output : OFF							Squelch close

TERMINAL FUNCTIONS

Connector No.	Terminal No.	Terminal Name	I/O	Terminal Function
FINAL UNIT (X57-3740-XX) (D/4)				
CN1 To TX-RX unit	1	DO	I	Transmission signal input, coaxial connector.
CN2 To TX-RX unit	1	RA	O	Receiver signal input, coaxial connector.
CN3	1	B	I	Power supply input. (13.6V ±15%)
W1 To TX-RX unit	1	DB	O	Transmission drive control voltage output. (APC)
	2	E	–	Earth.
	3	8R	I	8V input during reception.
	4	8T	I	8V input during transmission.
W3 To AF unit	1	E	–	Earth.
	2	B	O	Power supply output. (13.6V ±15%)
	3	B	O	Power supply output. (13.6V ±15%)
CONTROL UNIT (X57-3740-XX) (A/4)				
CN101 To AF unit	1	8C	I	Common 8V. (8V ± 5%)
	2	SB	I	Power input after power switch. (13.6V ± 15%)
	3	SB	I	Power input after power switch. (13.6V ± 15%)
	4	SB	I	Power input after power switch. (13.6V ± 15%)
	5	PSB	I	Power input. (unswitched)
	6	PSC	O	Controls power switch relay. (Power SW ON : "L", OFF : "H")
	7	AFO	O	Audio output.
	8	SSC	O	Controls SPEAKER select relay.
	9	E	–	Earth.
	10	E	–	Earth.
	11	RS1	I	Input for remote speaker 1. (BTL 4W)
	12	CSP	I	Input for common speaker. (BTL 13W)
	.13	CSP	I	Input for common speaker. (BTL 13W)
	14	ES1	I	Input for external speaker A. (BTL 13W)
	15	ES1	I	Input for external speaker A. (BTL 13W)
	16	OS1	I	Input for external speaker B. (BTL 13W)
	17	OS1	I	Input for external speaker B. (BTL 13W)
CN102 To TX-RX unit	1	DP	O	DATA output for PLL.
	2	EP	O	ENABLE output for PLL.
	3	CP	O	CLOCK output for PLL.
	4	LD	I	LOCK detect input for PLL. "H" : LOCK, "L" : UNLOCK
	5	TO	O	TONE signal output.
	6	ES	O	ENABLE output for shift register.
	7	MO	O	Modulation signal output.
	8	8C	O	Common 8V. (8V ± 5%)
	9	E	–	Earth.
	10	8C	O	Common 8V. (8V ± 5%)
	11	DET	I	Detection signal input.
	12	NC	–	Not use.
	13	NC	–	Not use.
CN103 To control cable	1	E	–	Earth.
	2	DP	O	DATA output for PLL.
	3	CP	O	CLOCK output for PLL.
	4	EI	O	ENABLE interface output.
	5	DD2	I/O	DATA input/output for HEAD 2.
	6	CD2	O	CLOCK output for HEAD 2.
	7	TXD	O	TX DATA output for HEAD 1.
	8	RXD	I	RX DATA input for HEAD 2.
	9	BZ2	O	Beep output for HEAD 2.
	10	5C	O	Common 5V. (5V ± 5%)
	11	DE3	O	Detection signal output for HEAD 2.
CN104 To ACC connector	1	MIC	I/O	MIC signal input/output.
	2	ME	–	MIC earth.
	3	DEO	O	Detection signal output.
	4	E	–	Earth.
	5	HN1	O	Horn alert signal output.
	6	HN2	O	Horn alert signal output.
	7	IGN	I	Ignition input.
	8	OS1	O	Input for external speaker B. (BTL 13W)
CN105 To ACC connector	1	PTT	I/O	PTT signal input/output.
	2	HK	I/O	MIC HOOK signal input/output.
	3	RS2	I	Output for remote speaker. (BTL 4W)
	4	ES1	O	Output for external speaker A. (BTL 13W)
	5	SB	O	Power output after power switch. (13.6V/1A)
	6	ES2	O	Output for external speaker A. (BTL 13W)
	7	OS2	O	Output for external speaker B. (BTL 13W)
CN106 To signaling (option)	1	AC2	I	Audio control signal input by the signaling (option).
	2	PTT	I/O	PTT signal input/output for signaling (option).
	3	DEO	O	Detection signal output.
	4	E	–	Earth.
	5	RST	O	RESET signal output for signaling (option).
	6	RLC	O	Controls Horn alert relay. ("L" : Horn alert switch ON)
	7	ALT	I	ALERT signal input for signaling (option).
	8	HN1	I	Horn alert signal input.
	9	HN2	I	Horn alert signal input.
CN107 To signaling (option)	1	MCM	I/O	MIC MUTE signal input/output.
	2	DTM	I	DTMF (option) signal input.
	3	MCO	I	MIC signal input.
	4	8C	O	Common 8V. (8V ± 5%)
	5	DBD	I	DEAD BEAT DISABLE input.
	6	DT3	O	Five-tone data rewrite output.
	7	CK3	O	Five-tone data rewrite output.
CN108 To voice scramble	1	MIC	O	MIC signal output.
	2	MCO	I	MIC signal input.
	3	8C	O	Common 8V. (8V ± 5%)
	4	E	–	Earth.
	5	AC1	O	Audio control signal output. OPT SW ON : "L", OFF : "H"
	6	PTT	I/O	PTT signal input/output.
	7	DEO	O	Detection signal output.
	8	DE2	I	Detection signal input.
	9	0	O	SCRAMBLE code output.
	10	2	O	SCRAMBLE code output.
	11	4	O	SCRAMBLE code output.
	12	8	O	SCRAMBLE code output.
W105 To remote head	1	RS2	O	Output for remote speaker. (BTL 4W)
	2	RS1	O	Output for remote speaker 1. (BTL 4W)
	3	SB	O	Power output after power switch. (13.6V ± 15%)
	4	SPR	I	SPARE reserved input terminal.
	5	PS	I	Power switch control signal input.
	6	CD	O	CLOCK output to the display unit (option).
	7	DD	I/O	DATA signal input/output for display unit (option).
	8	VOL	I	Electronic volume control signal input.
	9	E	–	Earth.
	10	MIC	I	MIC signal input.

TERMINAL FUNCTIONS

Connector No.	Terminal No.	Terminal Name	I/O	Terminal Function
	11	ME	–	MIC earth.
TX-RX UNIT (X57-3740-XX) (B/4)				
CN301 To final unit	1	RA	I	Receiver signal input, coaxial connector.
CN302 To VCO/PLL unit	1	REF	O	TCXO 12.8MHz output for COM PLL IC.
	2	CP	O	CLOCK signal output for COM PLL IC.
	3	E	–	Earth.
	4	DP	O	DATA signal output for COM PLL IC.
	5	LS	O	PLL LPF select signal output.
	6	EP	O	PLL ENABLE signal output for COM PLL IC.
	7	STR	O	Standby RX. (RX : "H". TX : "L")
	8	E	–	Earth.
	9	MP	O	MODULATION signal output.
	10	LD	I	LOCK detect input. (LOCK : "H", UNLOCK : "L")
	11	5V	O	5V AVR.
	12	E	–	Earth.
	13	CV	I	PLL LOCK voltage input.
	14	OUT	I	VCO signal input.
	15	8V	O	Common 8V. (8V ± 5%)
CN303 To final unit	1	DO	O	Transmission drive output, coaxial connector. (200mW)
CN304 To final unit	1	DB	I	Transmission drive control voltage input. (APC)
	2	E	–	Earth.
	3	8R	O	8V output during reception.
	4	8T	O	8V output during transmission.
CN305 To control unit	1	DP	I	DATA input for PLL.
	2	EP	I	ENABLE input for PLL.
	3	CP	I	CLOCK input for PLL.
	4	LD	O	LOCK detect output for PLL. (LOCK : "H", UNLOCK : "L")
	5	TO	I	TONE signal input.
	6	ES	I	ENABLE input for shift register.
	7	MO	I	Modulation signal input.
	8	8C	I	Common 8V. (8V ± 5%)
	9	E	–	earth.
	10	8C	I	Common 8V. (8V ± 5%)
	11	DET	O	Detection signal output.
	12	NC	–	Not use.
	13	NC	–	Not use.
AF UNIT (X57-3740-XX) (C/4)				
CN501 To control unit	1	OS1	O	Output for external speaker B. (BTL 13W)
	2	OS1	O	Output for external speaker B. (BTL 13W)
	3	ES1	O	Output for external speaker A. (BTL 13W)
	4	ES1	O	Output for external speaker A. (BTL 13W)
	5	CSP	O	Output for common speaker. (BTL 13W)
	6	CSP	O	Output for common speaker. (BTL 13W)
	7	RS1	O	Output for remote speaker. (BTL 4W)
	8	E	–	Earth.
	9	E	–	Earth.
	10	SSC	I	Controls SPEAKER select relay.
	11	AFO	I	Audio input.
	12	PSC	I	Controls power switch relay. (Power SW ON : "L", OFF : "H")
	13	PSB	O	Power output. (unswitched)
	14	SB	O	Power output after power switch. (13.6V ± 15%)
	15	SB	O	Power output after power switch. (13.6V ± 15%)
	16	SB	O	Power output after power switch. (13.6V ± 15%)
	17	8C	O	Common 8V. (8V ± 5%)
CN502 To final unit	1	E	–	Earth.
	2	B	I	Power supply input. (13.6V ±15%)
	3	B	I	Power supply input. (13.6V ±15%)
DISPLAY UNIT (X54-31XX-20) (A/2) 3100 : KCH-3, 3110 : KCH-4 (OPTION)				
CN1 To head ACC connector	1	IRS	I	Internal speaker input. (RS2 ↔ IRS)
	2	RS2	O	Output for remote speaker. (BTL 4W)
	3	RS1	O	Output for external speaker. (RS1 ↔ RS2)
	4	AUX	O	AUX signal output. (space)
	5	E	–	Earth.
	6	SPR	I	SPARE reserved input terminal.
CN2 To control unit	1	ME	–	MIC earth.
	2	MIC	O	MIC signal output.
	3	E	–	Earth.
	4	VOL	O	Electronic volume control signal output.
	5	DD	I/O	DATA signal input/output.
	6	CD	I	CLOCK output.
	7	PS	O	Power switch control signal output.
	8	SPR	O	SPARE reserved output terminal.
	9	SB	I	Power output after power switch. (13.6V)
	10	RS1	I	Input for remote speaker. (BTL 4W)
	11	RS2	I	Input for remote speaker. (BTL 4W)
CN3 To encoder	1	EN1	I	Encoder pulse input.
	2	E	–	Earth.
	3	EN2	I	Encoder pulse input.
CN4 To speaker	1	IRS	O	Internal speaker input.
	2	RS1	O	Internal speaker input.

TERMINAL FUNCTIONS

1. Functions of Pins Used During System Set-up

1-1. 15-pin ACC terminal

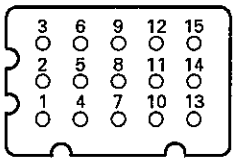

1 pin : HK (MIC Hook Signal Input/Output)
This normally functions the same as for the transceiver MIC HOOK (microphone). High (5V) : Offhook; Low : Onhook.
Since the MIC HOOK can be controlled by using this pin as an input pin, the hook operation need not be performed from the microphone. Set this pin to low to automatically perform the onhook operation.

2 pin : ME (MIC Earth)
Use this MIC earth pin if the ACC terminal MIC is used.

3 pin : IGN (Ignition Input)
If you use this pin, see the KCT-18 section (page 19) of this service manual.

4 pin : DEO (Detect Signal Output)
The transceiver detection output (400mV/47kΩ) is present.

5 pin : MIC (MIC Signal Input/Output)
Same as the transceiver MIC input because this pin is directly connected to the transceiver MIC input. 5mV/3kHz dev. (600Ω) modulation is gained on input.
The input from the transceiver panel is output as it is.

6 pin : ES1 (Output for External Speaker A)
12 pin : ES2 (Output for External Speaker A)
Output for External Speaker (BTL 13W/5%)

7 pin : SB (DC Power Output after Power Switch)
When you modify your radio as described in system set-up, take the following precaution.
The rating of pin 7 (SB) of the accessory connector (J4) on the rear of the radio is 13.6V (1A). Insert a 1A fuse if you use the SB pin for external equipment.

8 pin : PTT (PTT Signal Input/Output)
Normally functions the same as the transceiver PTT (microphone). It is high (5V) when the PTT is off and low when the PTT is on, to control the external PTT. Since the PTT can be controlled by using this terminal as an input pin, the microphone PTT operation is not required. Set this pin to low to perform the PTT operation.

9 pin : RS2 (Output for Remote Speaker)
If the speaker input is not applied to this remote speaker input pin, the front panel speaker is non-functional. (See the KES-4 section (page 20).)

10 pin : HN1 (Horn Alert Signal Output 1)
11 pin : HN2 (Horn Alert Signal Output 2)
Output pin for the horn alert relay when the KCK-5 is connected (rating: 24V DC/1A). See the KCK-5 service manual. (B51-8155-00)
If you do not use the KCK-5, another function could be output to this pin after special modification.

13 pin : OS1 (Output for External Speaker B)
14 pin : OS2 (Output for External Speaker B)
PA speaker output pin (BTL 13W/5%)

15 pin : E (Earth)
Use this pin as the ground pin when external equipment is connected to the ACC terminal.

1-2. Control unit (X57-3740-XX) (A/4)

- **CN106 to signaling**

1 pin : AC2 (Audio Control 2)
External audio control pin for optional signaling. Normally high (5V). When it is switched to low by external control, such as optional signaling, audio muting is canceled and the [CALL] indicator flashes. Note that the audio muting is not canceled unless the SQ on the main unit is also canceled.

2 pin : PTT (PTT Signal Input/Output)
Same as pin 8 of the 15-pin ACC terminal.

3 pin : DEO (Detect Signal Output)
Same as pin 4 of the 15-pin ACC terminal.

4 pin : E (Earth)

TERMINAL FUNCTIONS

5 pin : RST (Reset)
Reset pin for optional signaling.
Normally high. A reset pulse is output in synchronization with the PTT, HOOK, MON SW, and channel encoder operation.

6 pin : RLC (Relay Control)
Relay control pin for horn alert (KCK-5).
Normally high. It switches to low when the horn alert is turned on by selecting the [HA] switch.

7 pin : ALT (Alert)
Normally unused. An alert signal for optional custom signaling can be input to this pin.

8 pin : HN1 (Horn Alert Signal Input)
9 pin : HN2 (Horn Alert Signal Input)
Output pin for horn alert relay when the KCK-5 is connected.

- **CN107 to signaling**

1 pin : MCM (MIC Mute Signal Input/Output)
MIC mute signal pin. High : MIC mute; Low : Unmute.

2 pin : DTM (DTM Signal Input)
DTMF external modulation input pin.
380mV/1kHz dev.
1.2V/3kHz dev.

3 pin : MCO (MIC Signal Input/Output)
Normally functions the same as pin 5 of the 15-pin ACC terminal. If the transceiver is modified to connect a scramble unit, scrambled MIC modulation is output.

4 pin : 8C (Common 8V)
8V AVR output pin (8V ± 10%).

5 pin : DBD (Dead Beat Disable)
Transmit inhibit signal input pin.
Normally high (5V). When it switches to low, transmission is inhibited. When the optional KDD-4 is connected, the DBD operation is available.

6 pin : DT3 (DATA 3)
7 pin : CK3 (CLOCK 3)
Unused pin; Do not connect anything to this pin. Otherwise, the radio may malfunction.

- **CN108 to voice scramble**

1 pin : MIO (MIC Signal Output)
2 pin : MIO (MIC Signal Input)
Modulation input/output pin when the scrambler is connected.
Normally, functions the same as pin 5 of the 15-pin ACC terminal.

3 pin : 8C (Common 8V)
8V AVR output (8V ± 10%).

4 pin : E (Earth)

5 pin : AC1 (Audio Control 1)
Audio control signal output pin.
It is low for on and high for off when the OPT function switch is selected.
6 pin : PTT (PTT Signal Input/Output)
Same as pin 8 of the 15-pin ACC terminal.

7 pin : DE0 (Detect Signal Output)
Same as pin 4 of the 15-pin ACC terminal.

8 pin : DE2 (Detect Signal Input)
AF BPF input pin

} AF signal input/output pins when scrambler is connected

9 pin : 0
10 pin : 2
11 pin : 4
12 pin : 8

} Scrambler code output. See the optional (scrambler) function (page 18).

TK-830/(B)/(D) PC BOARD VIEWS

DISPLAY UNIT (X54-3100-20) : KCH-3 Component side view

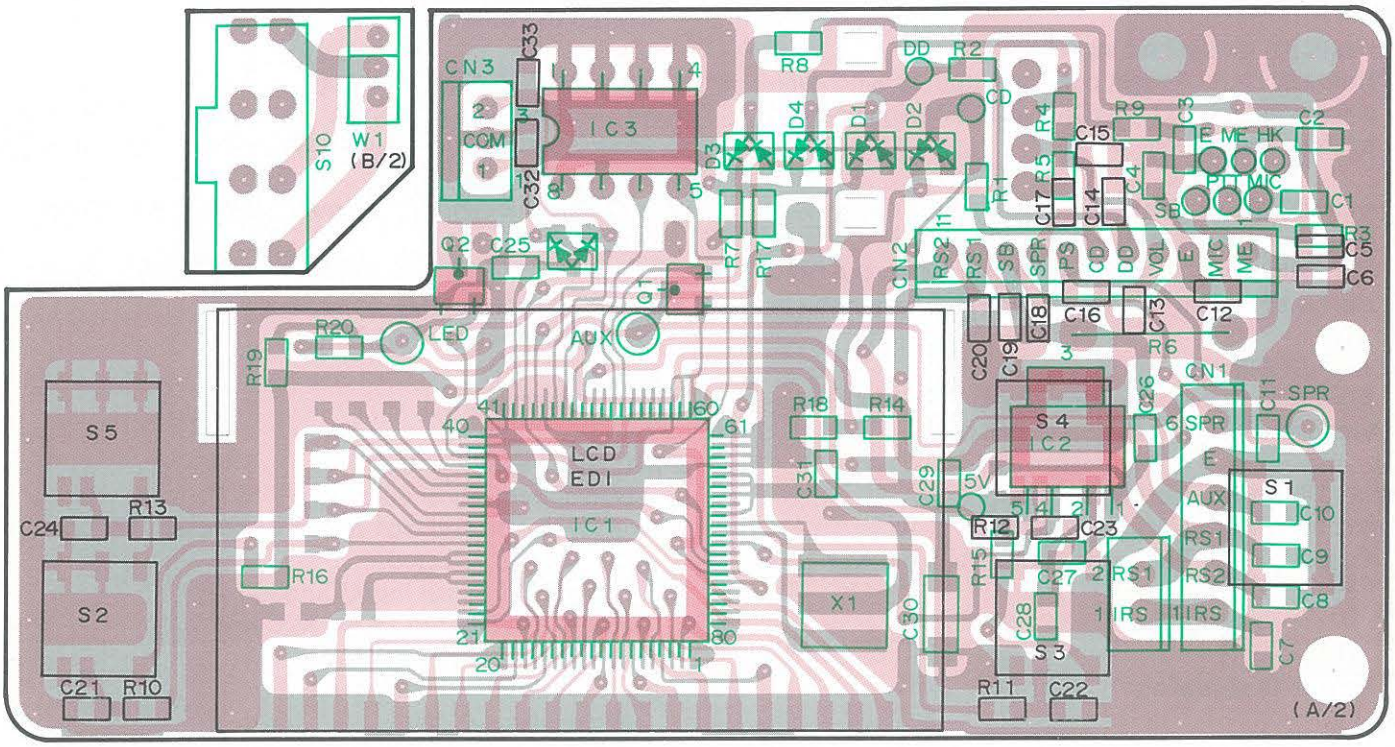

DISPLAY UNIT (X54-3100-20) : KCH-3 Foil side view

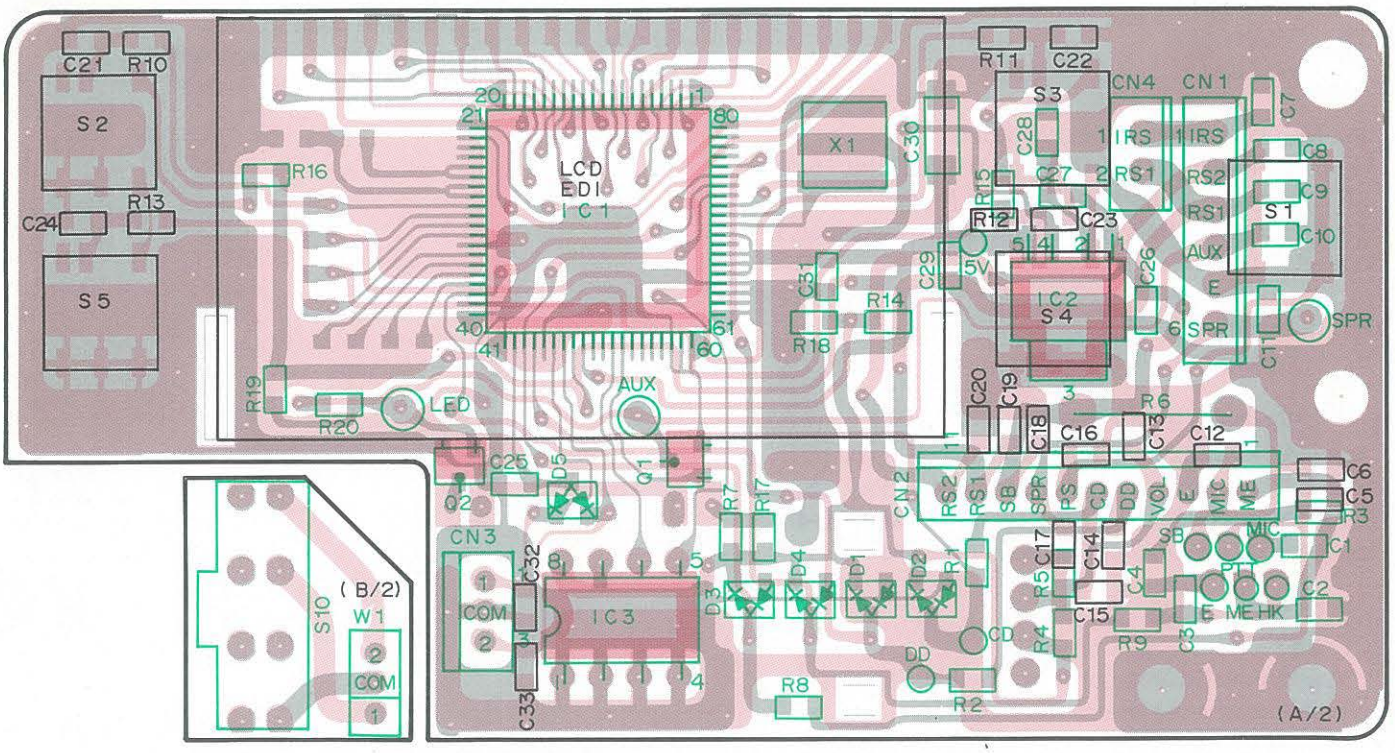

L78LR05B-FA

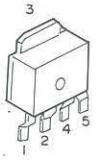

75328GC5563B9

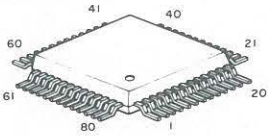

DTC114EK
DTD114EK

KCH-3 (X54-3100-20) (A/2)

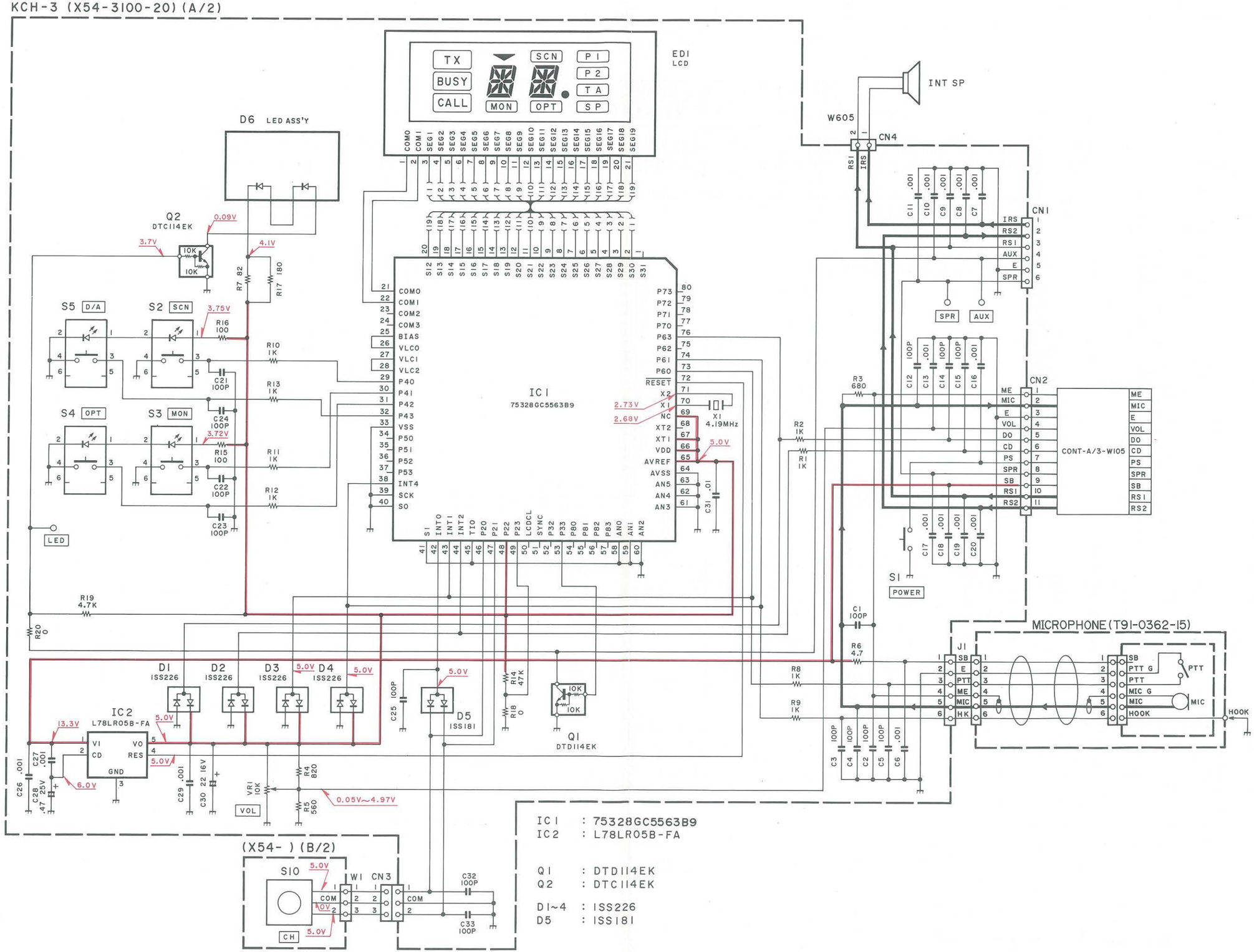

IC1 : 75328GC5563B9
IC2 : L78LR05B-FA

Q1 : DTD114EK
Q2 : DTC114EK

D1~4 : ISS226
D5 : ISS181

K-830/(B)/(D) CIRCUIT DIAGRAM

1-4 (X54-3110-20)(A/2)

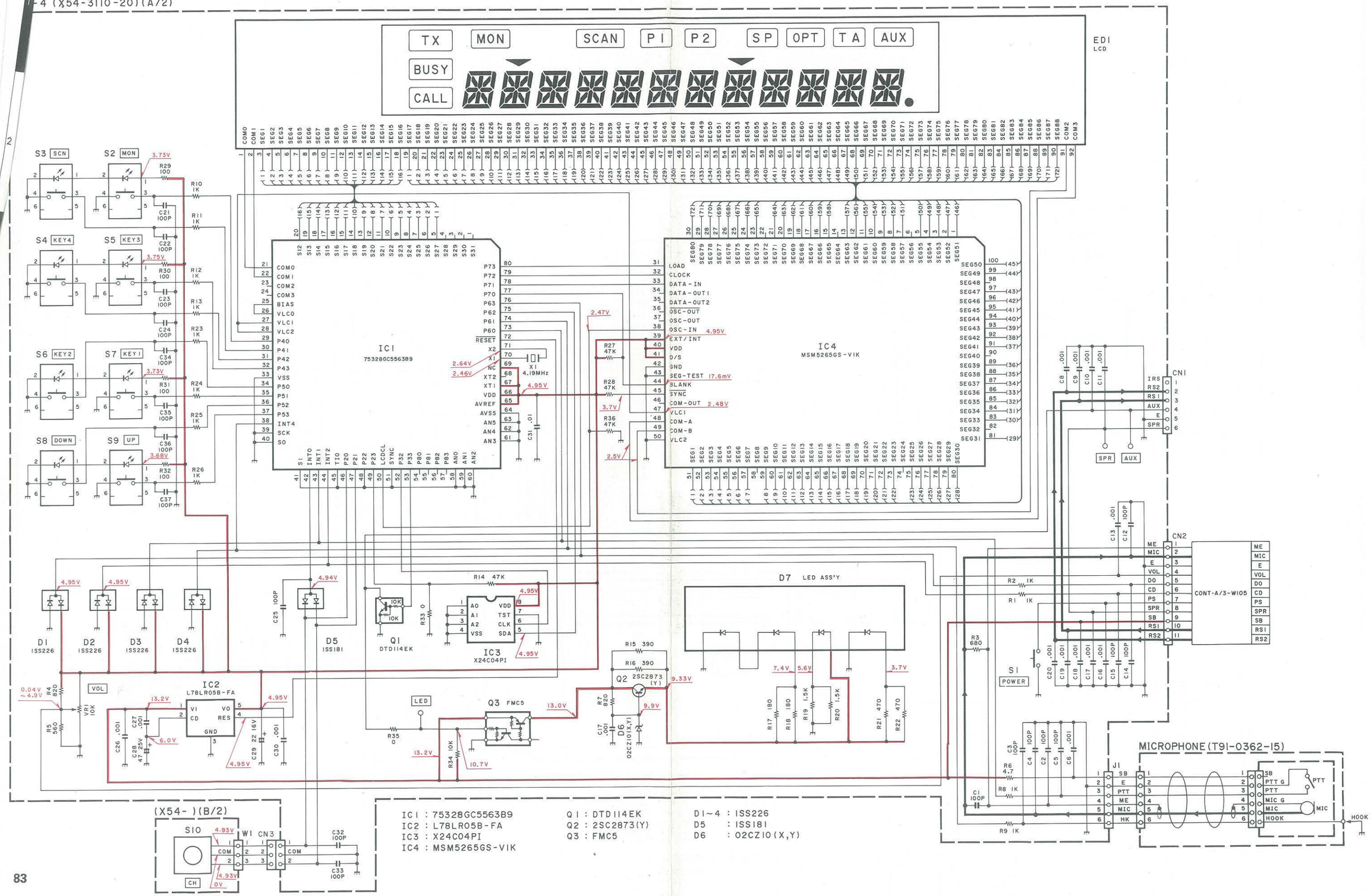

PC BOARD VIEWS TK-830/(B)/(D)

L78LR05B-FA

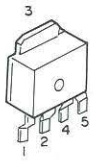

X24C04PI

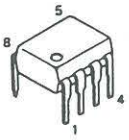

2SC2873

MSM5265GS-V1K

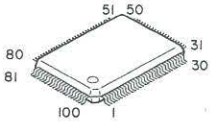

DTD114EK

FMC5

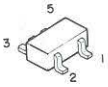

75328GC5563B9

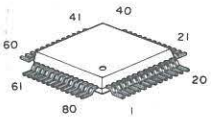

DISPLAY UNIT (X54-3110-20) : KCH-4
Component side view

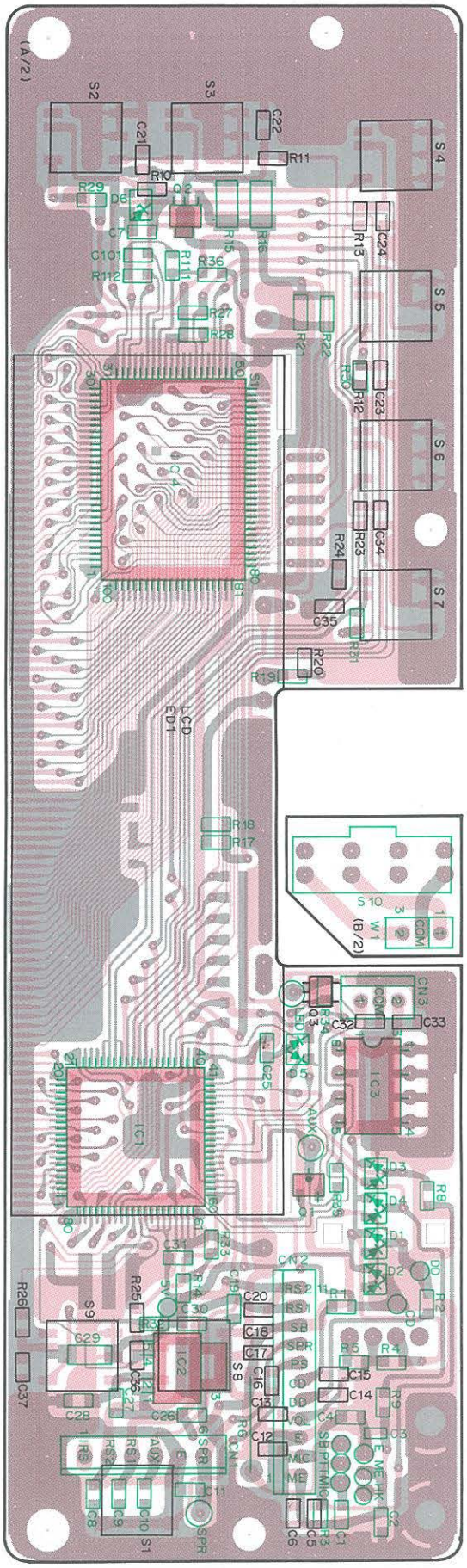

DISPLAY UNIT (X54-3110-20) : KCH-4
Foil side view

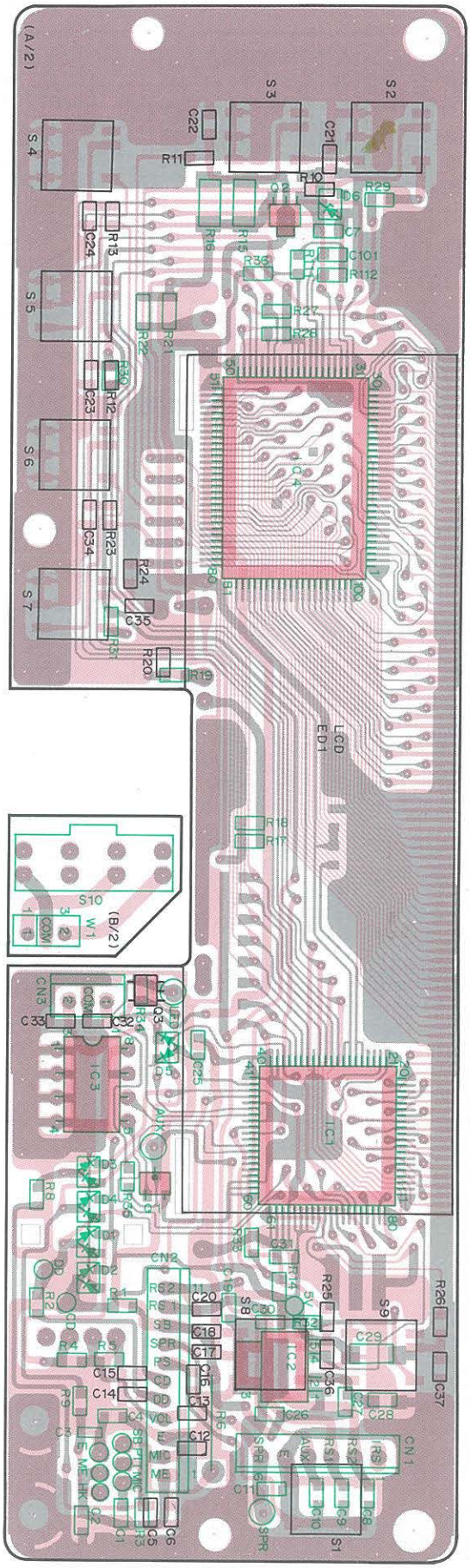

TK-830/(B)/(D) PC BOARD VIEWS

VCO/PLL UNIT (X58-3800-XX) Component side view
-10 : K,M -11 : K2,M2 -12 : K3 -13 : K4,M4

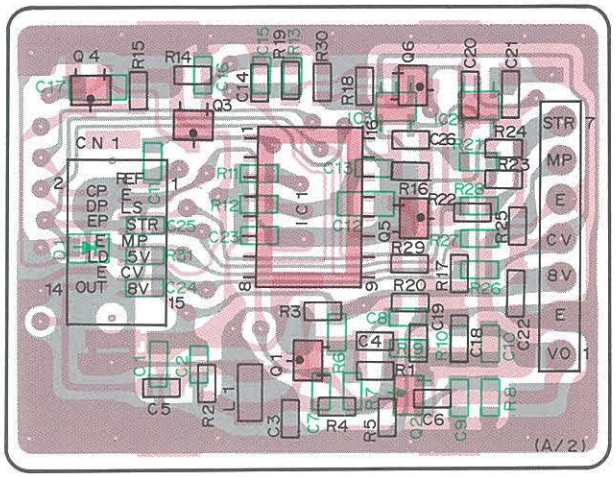

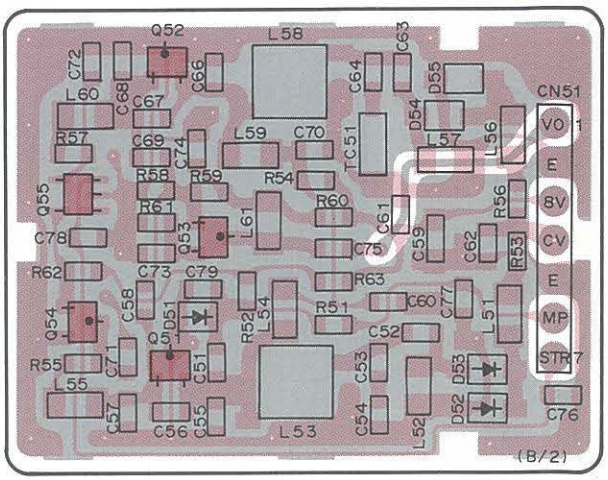

VCO/PLL UNIT (X58-3800-XX) Foil side view
-10 : K,M -11 : K2,M2 -12 : K3 -13 : K4,M4

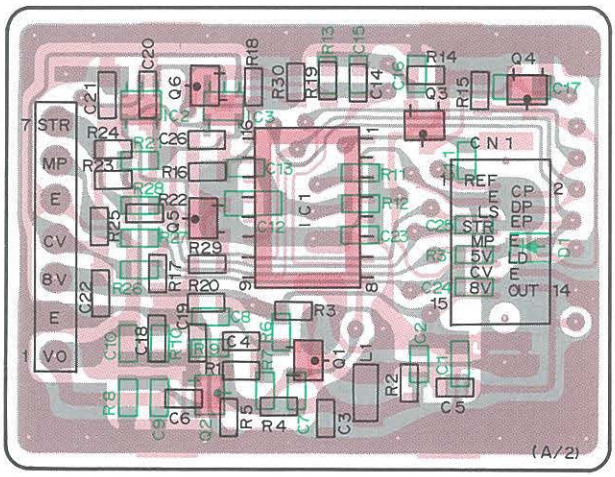

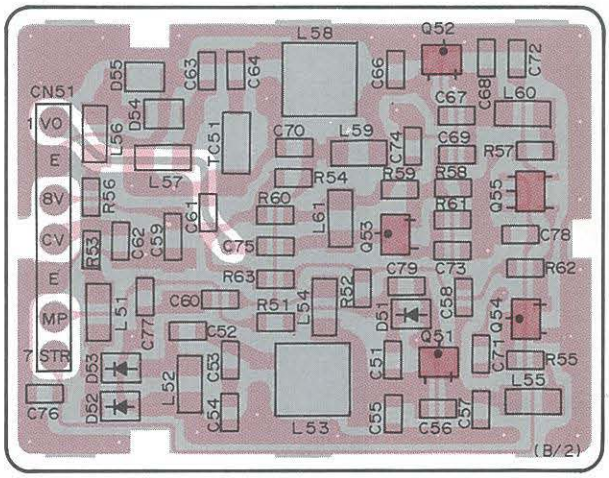

MB1504PF

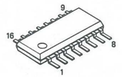

2SD1682

DTC114EK
DTC143EK
2SA1162
2SA1312
2SC3120
2SC3324
2SC3356

M57788H
M57788L
M57788SH
M57788UH

FMG2
FMW1

2SK508NV

NIT (X57-3740-XX) (D/4) **Component side view**
1 -14 : K2,M2 -15 : K3 -16 : K4,M4

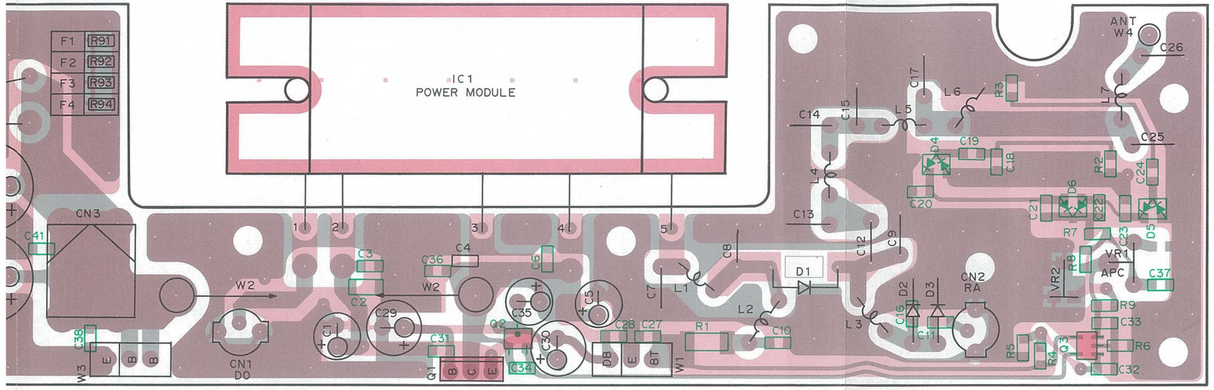

NIT (X57-3740-XX) (D/4) **Foil side view**
1 -14 : K2,M2 -15 : K3 -16 : K4,M4

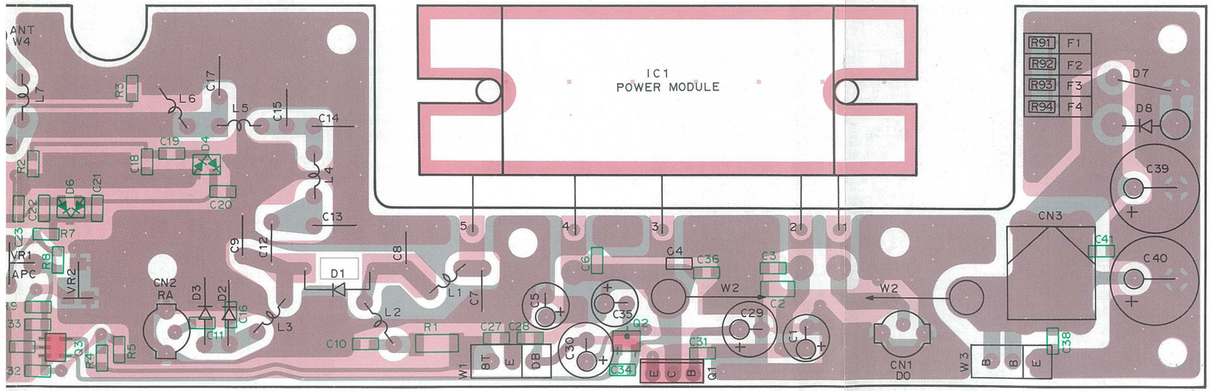

TK-830/(B)/(D) PC BOARD VIEWS

TX-RX UNIT (X57-3740-XX) Component side view
-13 : K,M -14 : K2,M2 -15 : K3 -16 : K4,M4

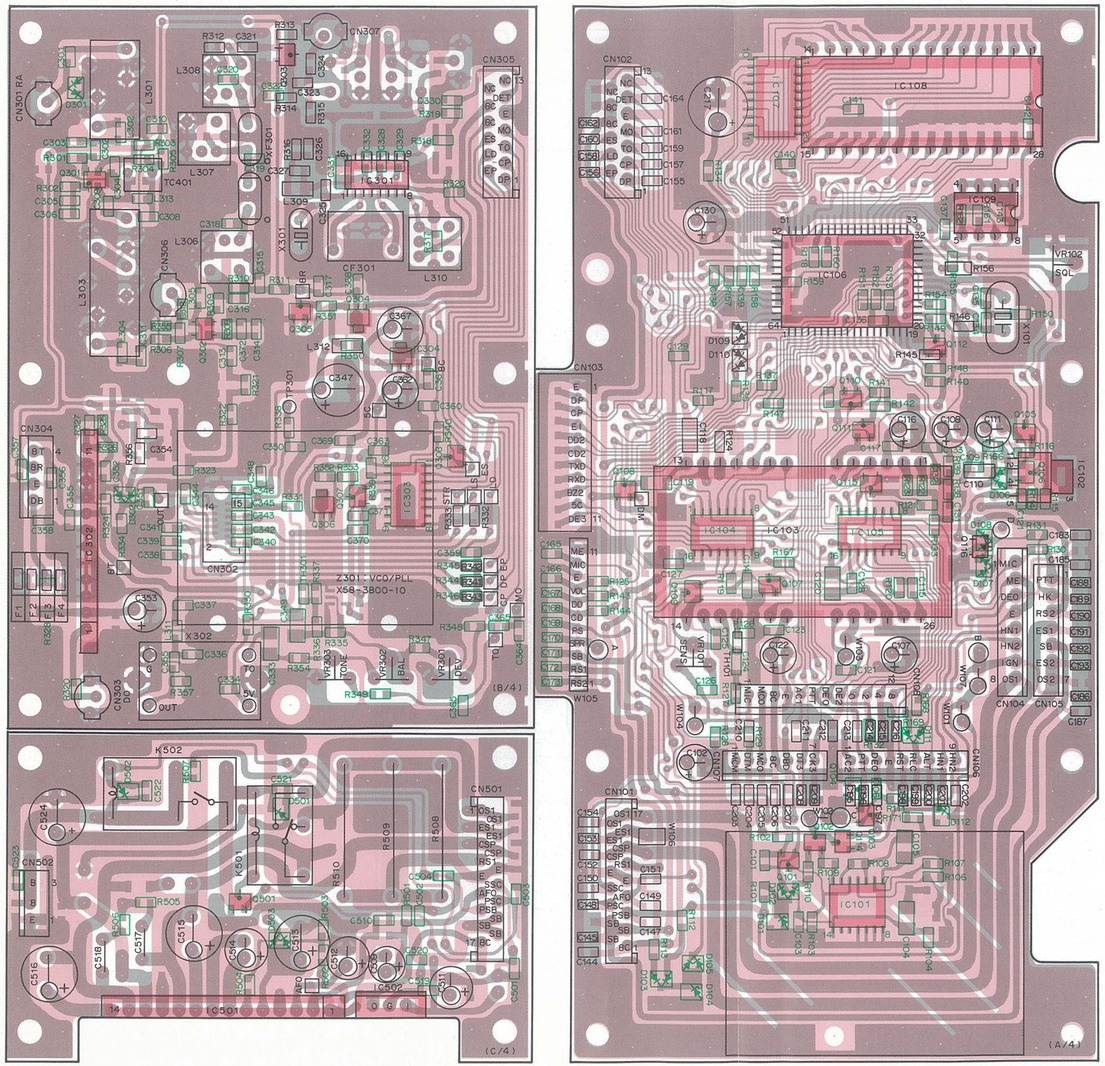

TX-RX UNIT (X57-3740-XX) Foil side view
-13 : K,M -14 : K2,M2 -15 : K3 -16 : K4,M4

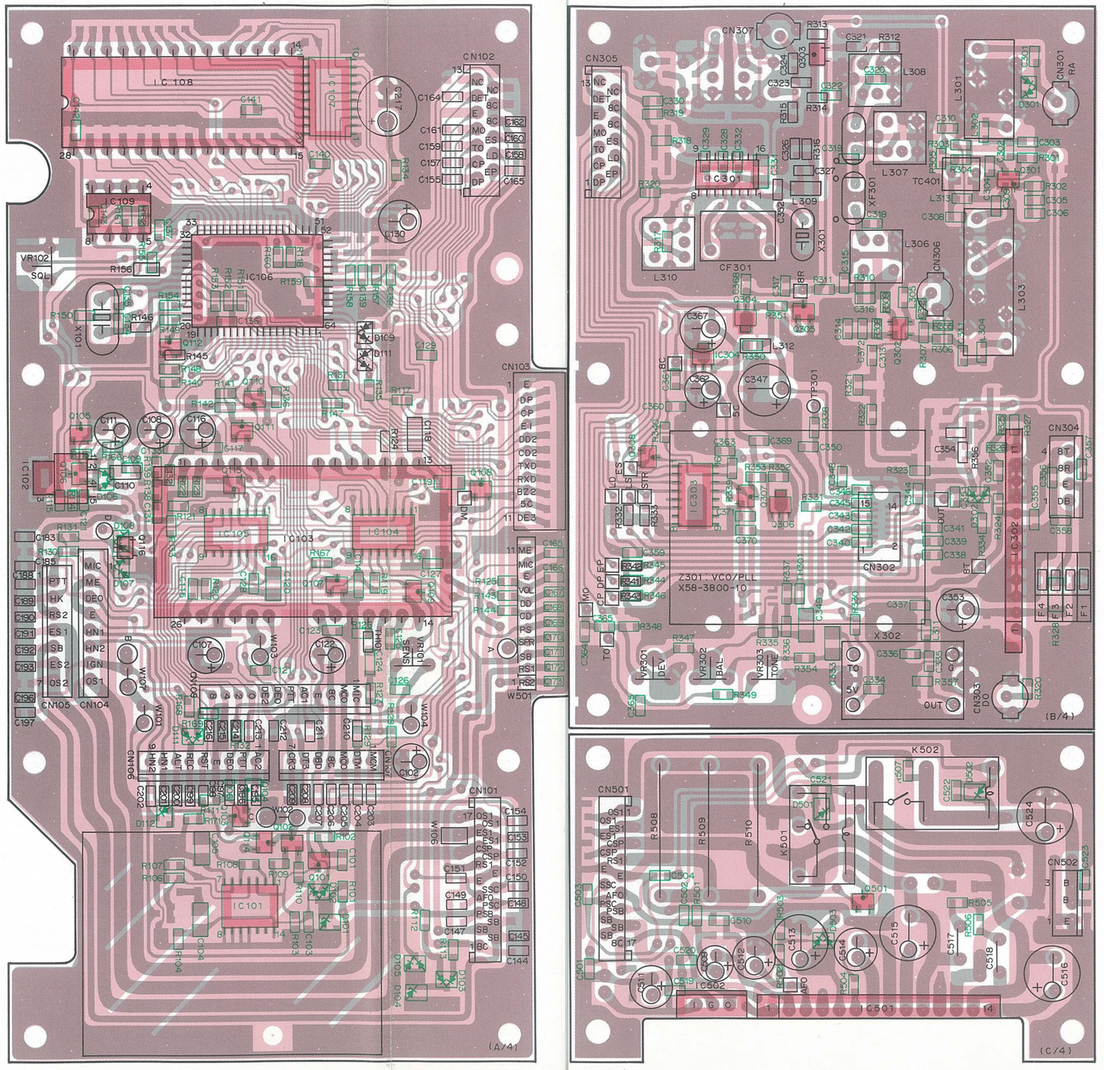

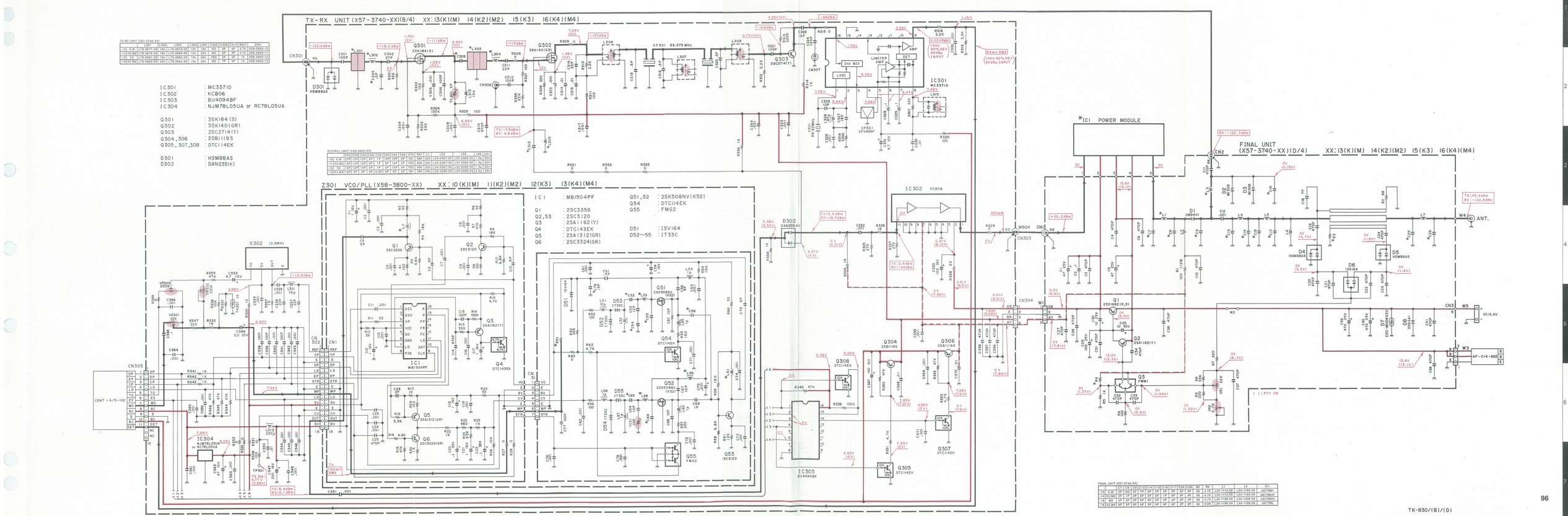

TX-RX UNIT (X57-3740-XX)												
		L301	L302	L303	L304	L305	C305	C313	R307	Z301
(13) K,M	L79-0877-05	18n	18n	NO	5P	4P	4.7K	X58-3800-10
(14)K2,M2	L79-0879-05	18n	22n	NO	5P	4P	4.7K	X58-3800-11
(15) K3	L79-0881-05	18n	22n	YES	5P	5P	1K	X58-3800-12
(16)K4,M4	L79-0883-05	22n	15n	NO	7P	4P	1K	X58-3800-13

VCO/PLL UNIT (X58-3800-XX)																
	C51	C52	C54	C55	C58	C63	C64	C66	C71	R51	L1	L53		L56	L59	L61
(10) K,M	27P	12P	12P	5P	1P	10P	10P	5P	NO	68K	22n	L34-2067-05		L34-2067-05	1.5u	33n
(11)K2,M2	18P	12P	12P	5P	1P	8P	10P	5P	YES	82K	22n	L34-2067-05		L34-2069-05	1.5u	22n
(12) K3	15P	12P	12P	4P	1P	6P	10P	5P	YES	56K	22n	L34-2067-05		L34-2069-05	1.5u	33n
(13)K4,M4	15P	4P	8P	4P	0.5P	6P	8P	5P	NO	68K	15n	L34-2066-05		L34-2069-05	2.2u	33n

FINAL UNIT (X57-3740-XX)																		
	C7	C8	C9	C10	C13	C14	C15	C16	C17	C25	C26	R3	R4	L1	L3	IC1
(13) K,M	3P	NO	4P	7P	4P	6P	3P	5P	5P	6P	8K	4.7K	L34-1113-05	L34-1185-05	M5799H
(14)K2,M2	3P	1P	3P	6P	3P	1P	3P	1P	5P	6P	8K	4.7K	L34-1113-05	L34-1185-05	M5799UH
(15) M3	4P	2P	3P	6P	5P	5P	3P	4P	3P	4P	8K	6K	L34-1185-05	L34-1185-05	M5799DH
(16)K4,M4	6P	5P	6P	6P	5P	5P	6P	6P	5P	5P	8K	6.8K	L34-1185-05	L34-1185-05	M5799L

TK-830/(B)/(D) SCHEMATIC DIAGRAM

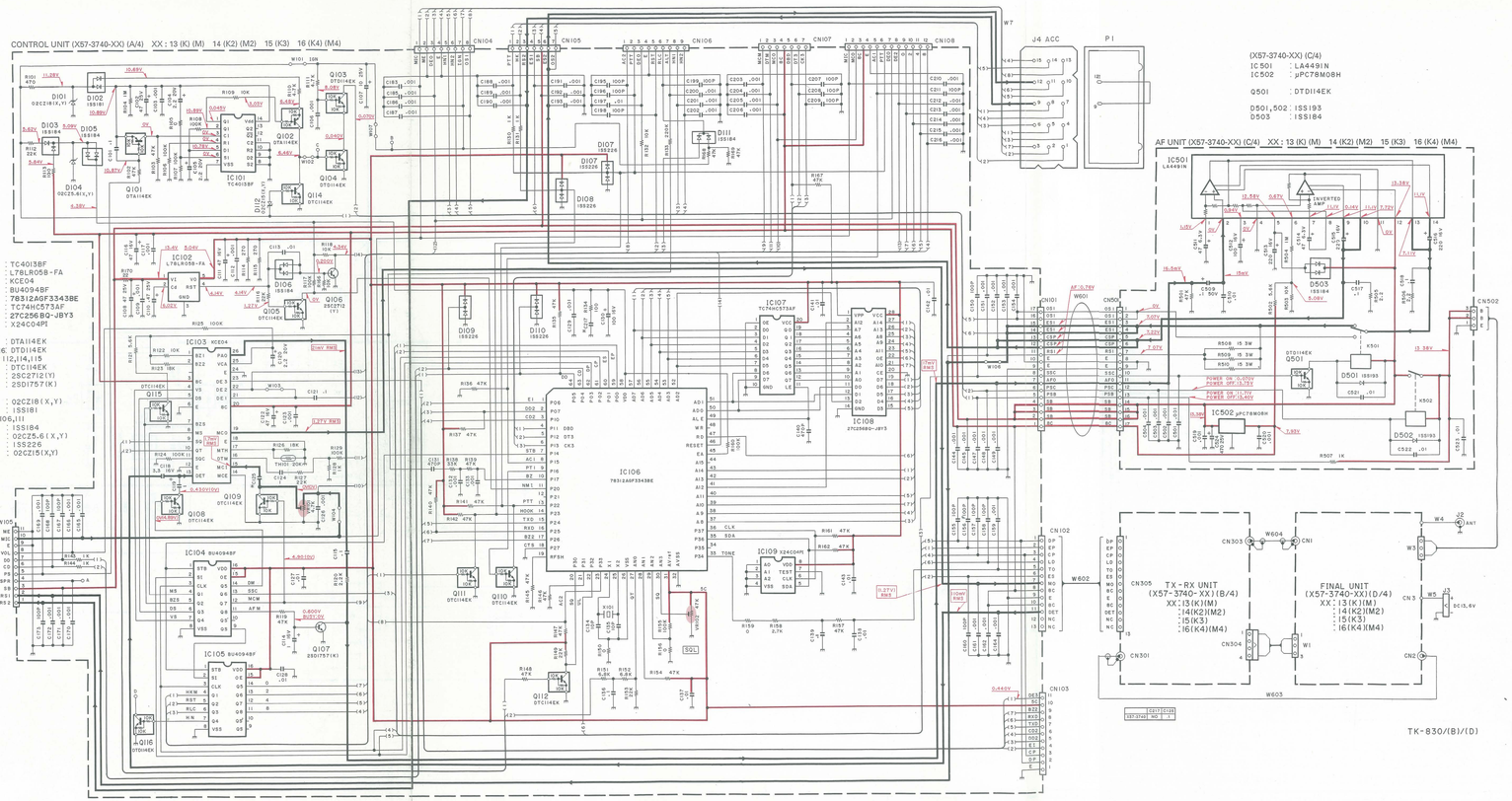

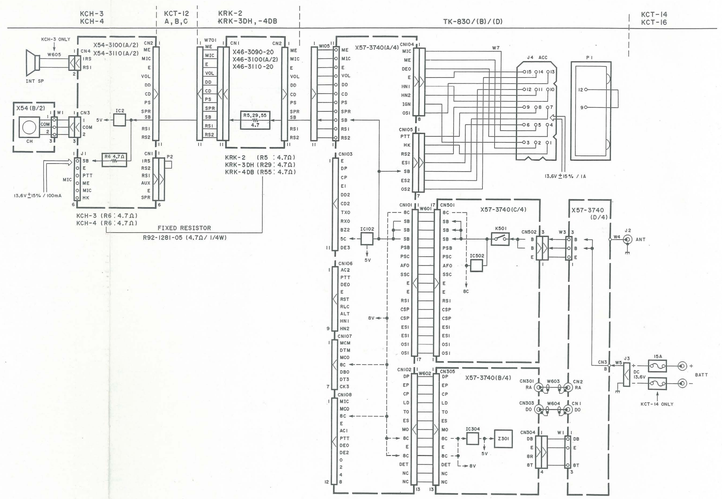

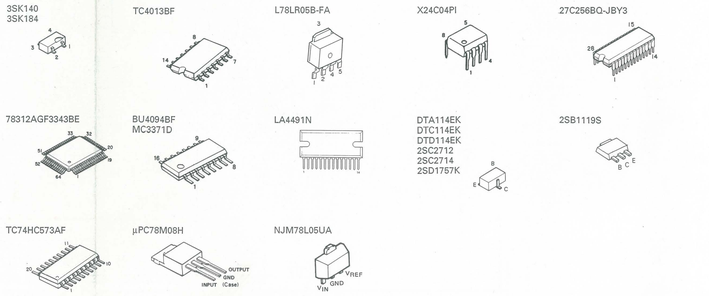

SPECIFICATIONS

GENERAL

Frequency Range ..... 403 to 430MHz
450 to 512MHz
Number of Channel ..... 32 semi-duplex channels
(KCH-3 basic front panel model modifiable to 99 channels with KCH-5,
KCH-4 full featured front panel model modifiable to 160 channels with KCH-5)
Channel Spacing ..... 25kHz (PLL channel step 12.5kHz)
Input Voltage ..... 13.6V DC negative ground
Current Drain ..... 0.6A on standby
2.2A on receive (at 13W)
9.0A on transmit
Duty Cycle ..... Transmitter 20%
Temperature Range ..... –30°C to +60°C (–22°F to +140°F)
Dimensions & weight ..... 7.05" (179mm) W x 2.36" (60mm) H x 8.98" (228mm) D, 5.95lbs (2.7kg) : with KCH-3 or KCH-4

RECEIVER (Measurements made per EIA standard EIA-204-C)

RF Input Impedance 50Ω
Sensitivity (EIA 12dB SINAD) 0.25μV
Modulation Acceptance ..... ±7kHz
Selectivity ..... –85dB
Intermodulation ..... –80dB
Spurious and Image Rejection ..... –85dB
Audio Power Output ..... 13W at 4Ω less than 5% distortion
Frequency stability ..... ±0.0005% from –30°C to +60°C (±0.0002% option)
Channel Frequency Spread 20MHz

TRANSMITTER (Measurements made per EIA standard EIA-152-B)

RF Power Output ..... 35W adjustable to 5W
RF Output Impedance 50Ω
Spurious and Harmonics ..... –80dB
Modulation F3E, F1D, F2D
FM Noise ..... –50dB
Microphone Impedance ..... Low impedance
Audio Distortion ..... Less than 2% at 1000Hz
Frequency Stability ..... ±0.0005% from –30°C to +60°C (±0.0002% option)
Channel Frequency Spread 20MHz

APPLICABLE (MIL-STD)

	MIL810-C	MIL810-D
Low Pressure	500.1/Procedure 1	500.2/Procedure 1
High Temperature	501.1/Procedure 1,2	501.2/Procedure 1,2
Low Temperature	502.1/Procedure 1	502.2/Procedure 1,2
Temperature Shock	503.1/Procedure 1	503.2/Procedure 1
Solar Radiation	505.1/Procedure 1	505.2/Procedure 1
Rain	506.1/Procedure 2	506.2/Procedure 2
Humidity	507.1/Procedure 2	507.2/Procedure 2
Salt Fog	509.1/Procedure 1	509.2/Procedure 1
Dust	510.1/Procedure 1	510.2/Procedure 1
Vibration	514.2/Procedure 8,10	514.3/Procedure 1
Shock	516.2/Procedure 1,2,3,5	516.3/Procedure 1,3,4,5,6

DEPARTMENT OF AGRICULTURE, EIA (VIBRATION)

Meets department of agriculture, forest service specifications for VIBRATION, referencing EIA standard EIA-152B and EIA-204C.

TK-830 series 35W model :

This device has not been approved by the Federal communications commission.
This device is not, and may not be, offered for sale or lease or sold or leased until the approval of the FCC has been obtained.

TK-830/(B)/(D)

KENWOOD CORPORATION
Shionogi Shibuya Building, 17-5, 2-chome Shibuya, Shibuya-ku, Tokyo 150, Japan

KENWOOD U.S.A. CORPORATION
COMMUNICATIONS & TEST EQUIPMENT GROUP
P.O. BOX 22745, 2201 East Dominguez St., Long Beach, CA 90801-5745, U.S.A.

KENWOOD ELECTRONICS DEUTSCHLAND GMBH
Rembrücker Str. 15, 6056 Heusenstamm, Germany

TRIO-KENWOOD U.K. LIMITED
KENWOOD House, Dwight Road, Watford, Herts., WD1 8EB United Kingdom

KENWOOD ELECTRONICS BENELUX N.V.
Mechelsesteenweg 418 B-1930 Zaventem, Belgium

TRIO-KENWOOD FRANCE S.A.
13, Boulevard Ney, 75018 Paris, France

KENWOOD LINEAR S.P.A.
20125, Milano-via Arbe, 50, Italy

KENWOOD ELECTRONICS AUSTRALIA PTY. LTD.
(A.C.N 001 499 074)
P.O. Box 504, 8 Figtree Drive, Australia Centre, Homebush, N.S.W. 2140, Australia

KENWOOD & LEE ELECTRONICS, LTD.
Wang Kee Building, 5th Floor, 34-37, Connaught Road, Central, Hong Kong

KENWOOD ELECTRONICS CANADA INC.
6070 Kestrel Road, Mississauga, Ontario, Canada L5T 1S8