ADJUSTMENT

Adjustment location

Top view

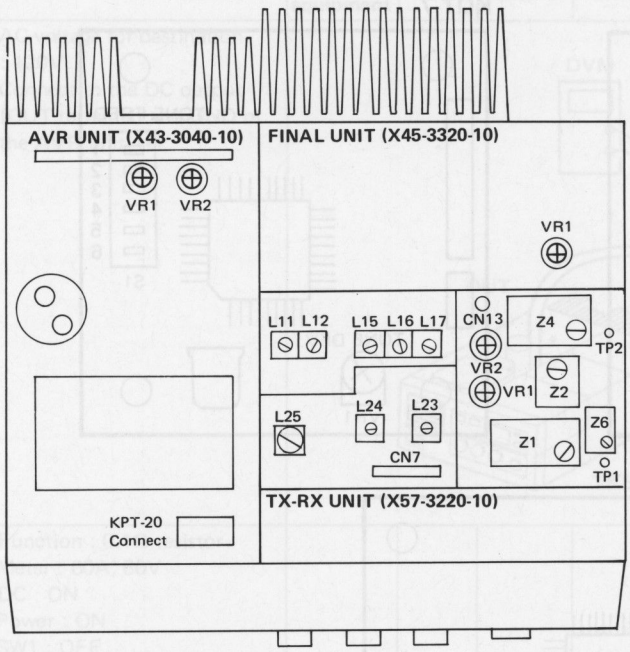

Bottom view

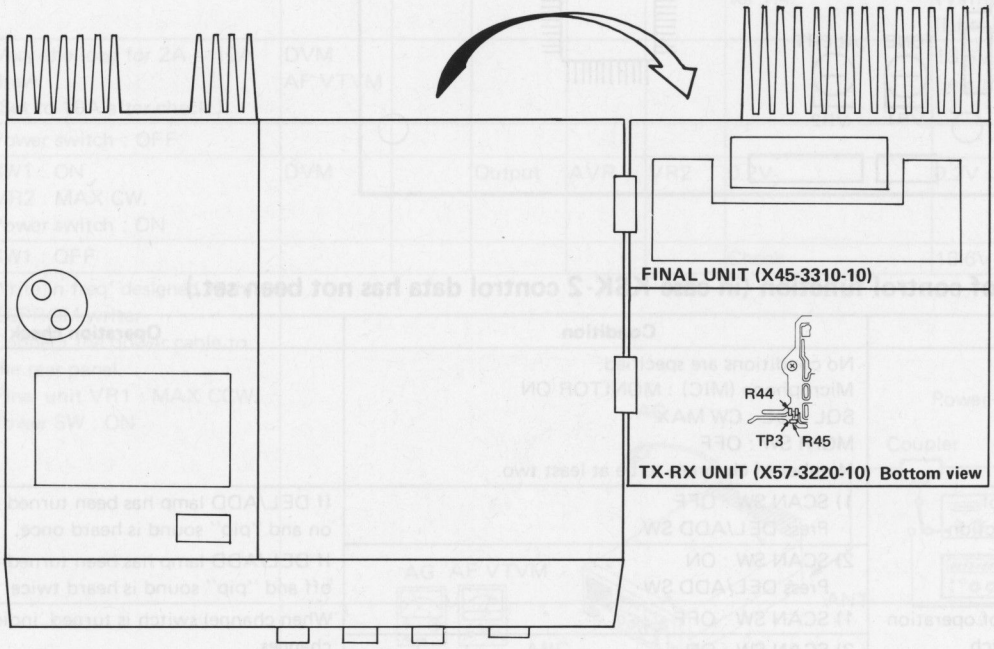

Front panel view

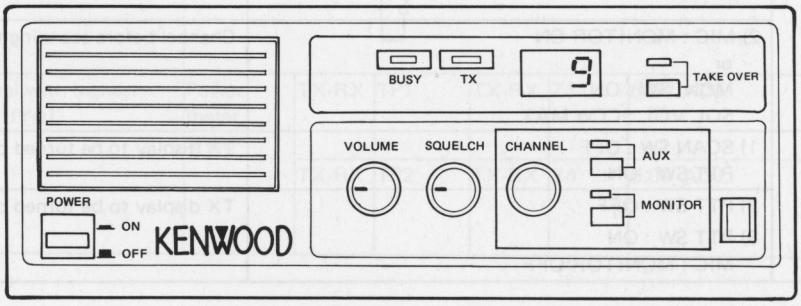

ADJUSTMENT

Adjustment points

KMS-5

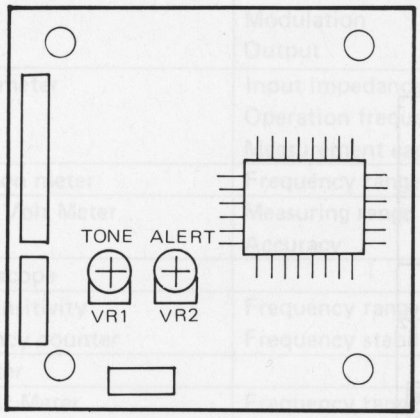

KQT-7

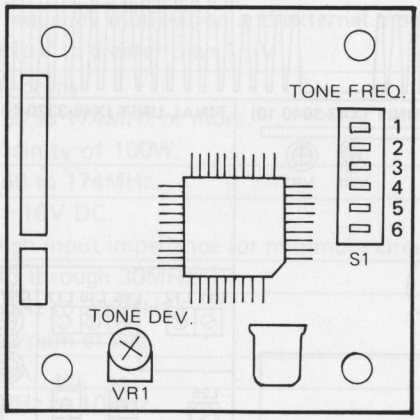

KSK-2

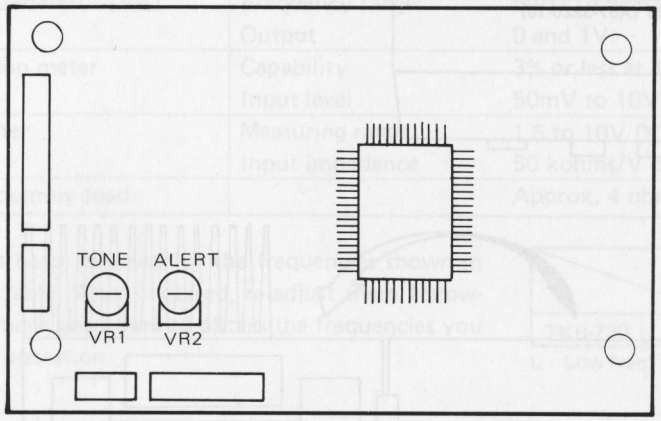

Confirmation of control function (in case KSK-2 control data has not been set.)

Item	Condition	Operation check
	No conditions are specified. Microphone (MIC) : MONITOR ON SQL VOL : CW MAX MONI SW : OFF Number of channels to be at least two.	
1. Confirmation of DEL/ADD function	1) SCAN SW : OFF Press DEL/ADD SW	If DEL/ADD lamp has been turned off, it is turned on and "pip" sound is heard once.
	2) SCAN SW : ON Press DEL/ADD SW	If DEL/ADD lamp has been turned on, it is turned off and "pip" sound is heard twice.
2. Confirmation of operation of channel switch	1) SCAN SW : OFF	When channel switch is turned, indicated channel changes.
	2) SCAN SW : ON	
3. Check of SCAN and selectable priority channel	1) SCAN SW : ON MIC : MONITOR OFF	The channel display should show a bar (—).
	2) MIC : MONITOR ON or MONI SW : ON SQL VOL : CCW MAX	Channel before scanning to be indicated.
4. Confirmation of PTT	1) SCAN SW : OFF PTT SW : ON	TX display to be turned on.
	2) PTT SW : OFF 3) PTT SW : ON MIC : MONITOR OFF	TX display to be turned off.

ADJUSTMENT

Alignment

Item	Condition	Measurement			Adjustment			Specifications/Remarks
		Test-equipment	Unit	Terminal	Unit	Part	Method	
1. Setting	1) AC voltage for destination : 120V 2) Connect to the DC output (OUT terminal) and GND of the AVR unit. (*)							
2. Test equipment set-up	1) Function : 0.1Ω resistor Meter : 60A, 60V DC : ON Power : ON SW1 : OFF							
3. Voltage setting	1) Power switch : ON	DVM		Output	AVR	VR1	Adjust the load for 7A.	13.6V ± 0.4V (Verify power indicator lights.)
	2) Vary the load for 2A – 10A draw. (Set to 10A after check.)	DVM AF VTVM						13.6V ± 0.7V DC Less than 30mV AC.
	3) Power switch : OFF							
4. Protection	1) SW1 : ON VR2 : MAX CW. Power switch : ON	DVM		Output	AVR	VR2	0.2V	0.2V ± 0.1V.
	2) SW1 : OFF						Check	13.6V ± 0.4V
5. Setting	1) Write in freq' designed with EEPROM writer. 2) Connect the power cable to the rear panel. 3) Final unit VR1 : MAX CCW. 4) Power SW : ON							
6. Common PLL Lock Voltage	1) CH : Channel with highest TX FREQ' (f_{TH}). 2) PTT : ON	Power meter DVM	TX-RX	TP1	TX-RX	Z1	6.0V ADJ.	±0.1V
7. TX PLL Lock Voltage			TX-RX	TP2	TX-RX	Z4	6.0V ADJ.	±0.1V

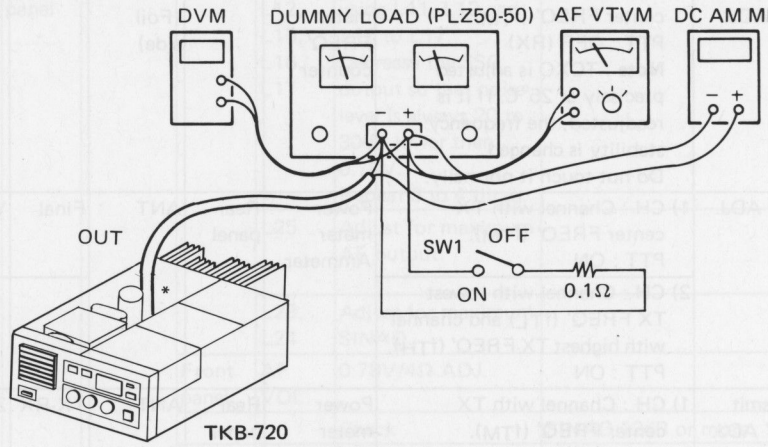

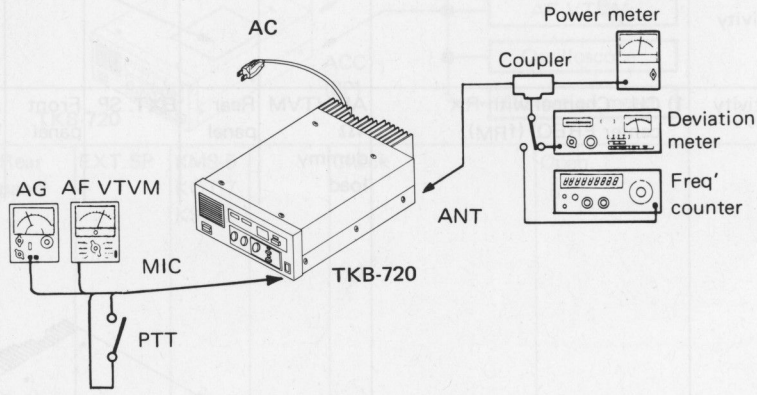

ADJUSTMENT

Item	Condition	Measurement			Adjustment			Specifications/Remarks
		Test-equipment	Unit	Terminal	Unit	Parts	Method	
8. TXCO Freq' ADJ.	1) CH : Channel with TX center FREQ' (f_{TM}). PTT : OFF (RX) **Note** : TCXO is adjusted precisely at 25°C. If it is readjusted, the frequency stability is changed. Do not touch it normally.	Power meter FREQ' counter	TX-RX	TP3 (Foil side)	TX-RX	Z6	f – 21.4MHz ADJ.	±100Hz
9. Power ADJ. (APC)	1) CH : Channel with TX center FREQ' (f_{TM}). PTT : ON	Power meter Ammeter	Rear panel	ANT	Final	VR1	MAX CW.	55W or more.
							52W ADJ.	±2W
	2) CH : Channel with lowest TX FREQ' (f_{TL}) and channel with highest TX FREQ' (f_{TH}). PTT : ON						Check	45W ~ 60W
10. Transmit Freq' ADJ.	1) CH : Channel with TX center FREQ' (f_{TM}). ANT : Power meter PTT : ON	Power meter FREQ' counter	Rear panel	ANT	TX-RX	Z2	FREQ' ADJ. of TX.	±100Hz
	2) CH : Check other channel. PTT : ON						Check	
11. Tone deviation ADJ. KMS-5, KQT-7 and KSK-2 (Option)	1) CH : Set the channel selector to the channel with which QT (CTCSS) is used. Deviation meter filter : LPF : 3kHz, HPF : OFF, De-emphasis : OFF PTT : ON	Power meter Deviation meter	Rear panel	ANT	KMS-5	VR1	±0.75kHz	±100Hz
					KQT-7	VR1		
					KSK-2	VR1		
12. Maximum deviation ADJ.	1) Connect AG to the MIC terminal. AG : 1kHz/50mV Deviation meter filter : LPF : 20kHz, HPF : 50Hz, De-emphasis : 750μsec. TX-RX unit VR1 : MAX CW. CH : Channel with highest TX FREQ' (f_{TH}). PTT : ON	Power meter Deviation meter	Rear panel	ANT	TX-RX	VR2	±4.4kHz ADJ. (±4.9kHz ADJ. when signaling unit installed.) Adjust one more than the other by switching between –P and +P.	±100Hz
13. MIC sensitivity ADJ.	1) AG : 1kHz/5mV				TX-RX	VR1	±3.0kHz ADJ. (±3.75kHz ADJ. when signaling unit installed.)	±100Hz
14. Sensitivity ADJ.	1) CH : Channel with RX center FREQ' (f_{RM}).	AF VTVM 4Ω dummy load	Rear panel	EXT. SP	Front panel	AF VOL.	0.78V/4Ω (Niose)	

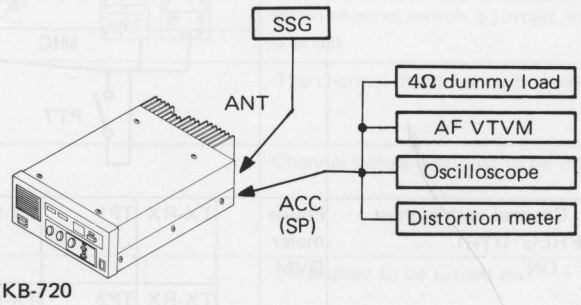

ADJUSTMENT

Item	Condition	Measurement			Adjustment			Specifications/Remarks
		Test-equipment	Unit	Terminal	Unit	Parts	Method	
	2) SSG FREQ' : f_{RM} Output : 500μV/−53dBm MOD : OFF	SSG AF VTVM Distortion meter 4Ω dummy load	Rear panel	EXT.SP	TX-RX	L11, L12, L15, L16, L17	Reduce noise level using L11, L12 and L15 to L17. Decrease the SSG output so that noise level is always 20 to 30dB lower than 0.78V. Repeat 3 to 4 times.	
	3) SSG Output : 500μV/−53dBm MOD : 1kHz/±3kHz DEV.					L25	Adjust for maximum AF output.	
	4) SSG Output : 0.32μV/−117dBm					L23, L24	Adjust for maximum SINAD.	
					Front panel	AF VOL.	0.78V/4Ω ADJ.	
							Check	SINAD 12dB or more.
	5) CH : Channel with lowest RX FREQ' (f_{RL}) and channel with highest RX FREQ' (f_{RH}). SSG FREQ' : f_{RL} or f_{RH} Output : 0.35μV/−116dBm				Front panel	AF VOL.	0.78V/4Ω ADJ.	
							Check	SIAND 12dB or more.
	6) CH : Channel with RX center FREQ' (f_{RM}). SSG FREQ' : f_{RM} Output : 500μV/−53dBm				Front panel	AF VOL.	4.0V/4Ω ADJ.	
							Check	S/N 45dB or more. Distortion : 5% or less.
15. Adjusting decoder sensitivity for signaling squelch KMS-5, KQT-7 and KSK-2 (Option)	1) CH : Set the channel selector to the channel with which QT (CTCSS) is used. SSG FREQ' : Set it to the FREQ' of the channel mentioned above. SSG Output : Turn the SSG output so that the SINAD sensitivity becomes 10dB.							
	2) SSG MOD SW : EXT. MOD AG1 FREQ' :1kHz AG2 FREQ' : QT tone freq'.							
	3) AG1 : Power switch OFF. AG2 Output : Adjust the output level of AG2 so that SSG deviation becomes 0.75kHz.							
	4) AG1 : Power switch ON. AG1 Output : Adjust the output level of AG1 so that the SSG deviation becomes 3.75kHz. (i.e., QT tone frequency/ 0.75kHz deviation, +1kHz/3kHz deviation) MIC hook : ON hook MONI SW : OFF		Rear panel	EXT.SP	KMS-5 KQT-7 KSK-2		Check	Open.
16. TAKE-OVER					Front panel	TAKE-OVER switch	Check	The TAKEOVER LED must light on.
17. ALERT tone level ADJ.	The ALERT tone is generated when the DEL/ADD switch is opened, in the time-out-time operation, etc. The ALERT tone level can be adjusted as desired with KMS-5 : VR2 and KSK-2 : VR2.							

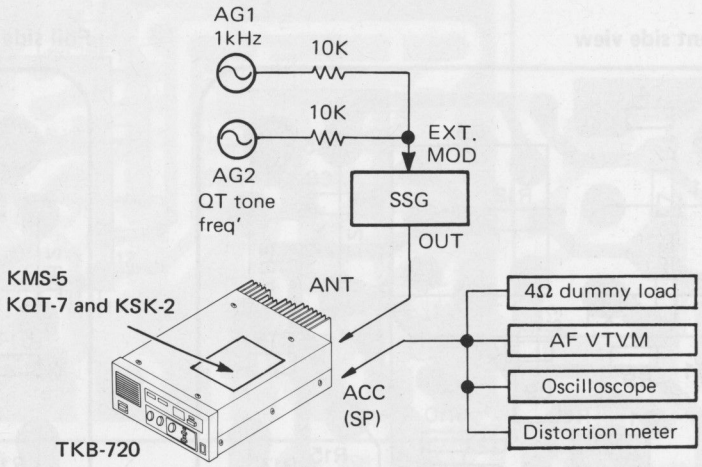

TKB-720 PC BOARD VIEWS/CIRCUIT DIAGRAMS

VCXO : Z2 (X58-3160-10)

VCXO(TX-RX UNIT:Z2) (X58-3160-10)

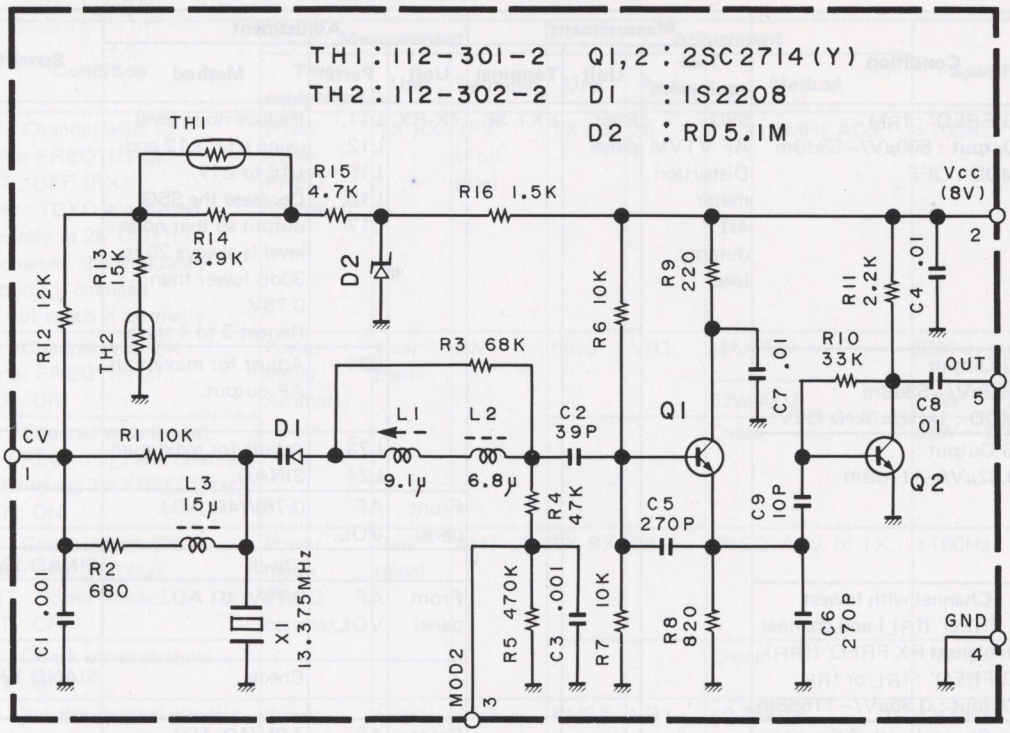

Component side view

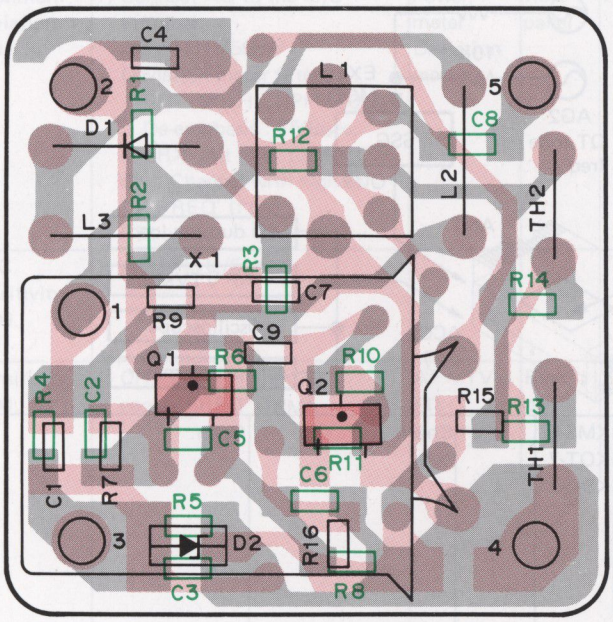

Foil side view

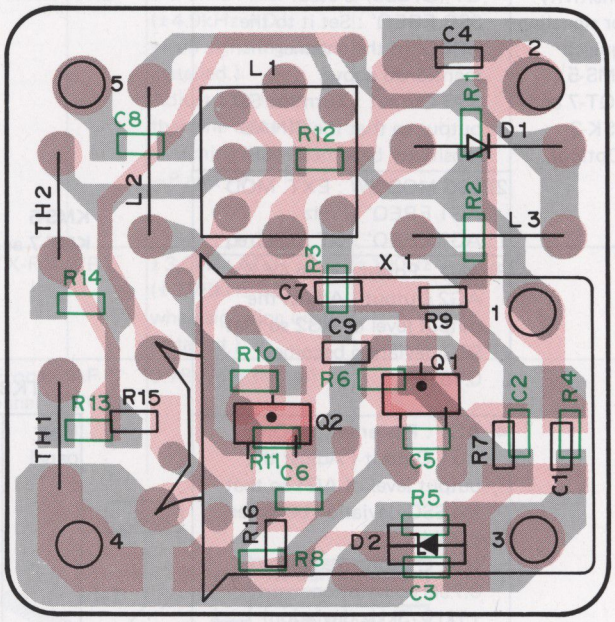

2SC2712
2SC2714

TC4007UBF

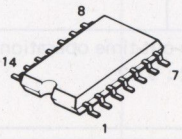

MC145152SL

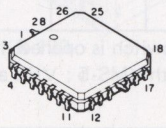

PC BOARD VIEWS/CIRCUIT DIAGRAMS TKB-720

TX-PLL : Z3 (X58-3170-10)

TX PLL(TX-RX UNIT :Z3)(X58-3170-10)

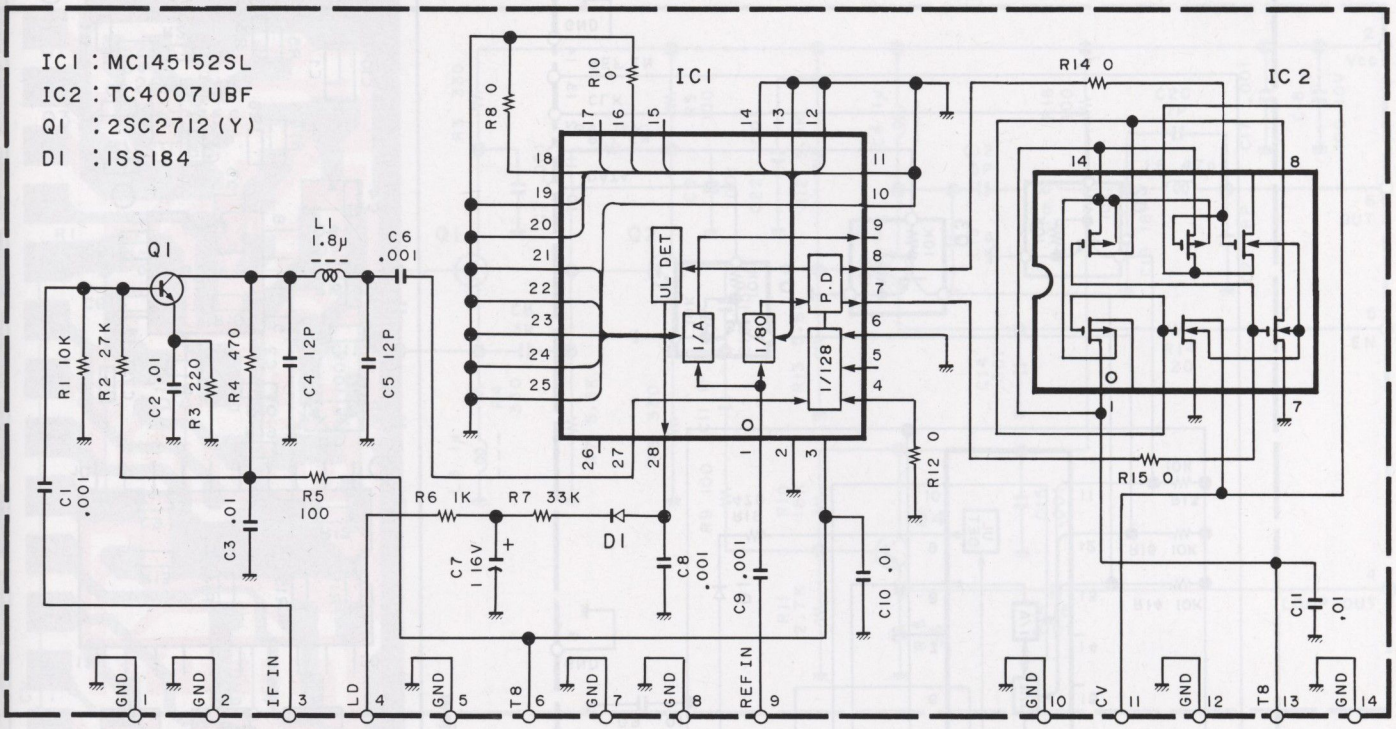

Component side view

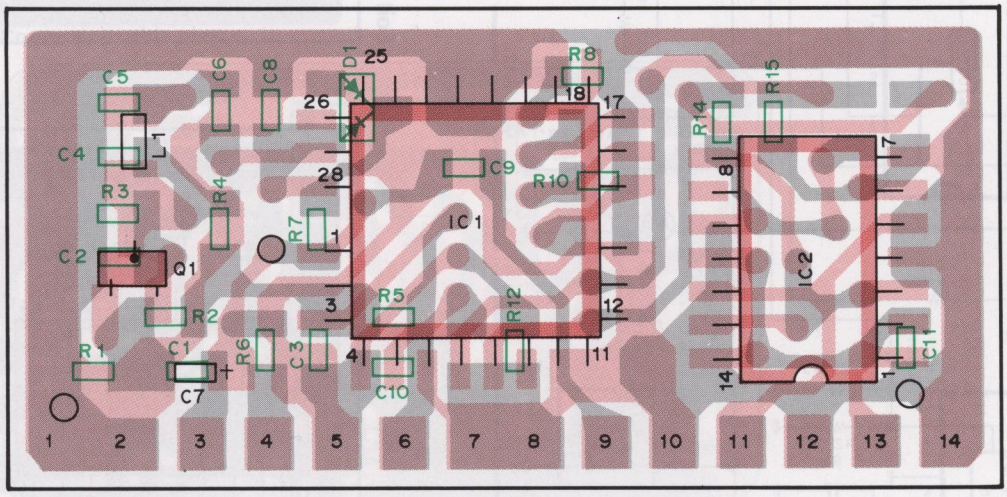

Foil side view

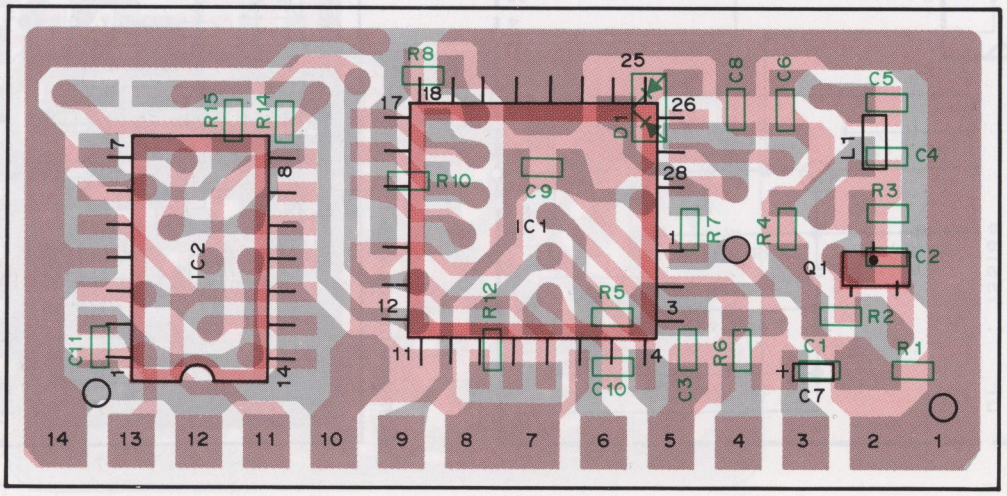

TKB-720 PC BOARD VIEWS/CIRCUIT DIAGRAMS

COMMON PLL : Z5 (X58-3180-11)

COMMON PLL (TX-RX UNIT : Z5) (X58-3180-11)

IC1	:	MB504F
IC2	:	JLC1075F
Q1	:	2SC3099
Q2~4	:	DTC114EK
Q5	:	DTC143EK
Q6	:	2SA1162(Y)
D1	:	1SS184

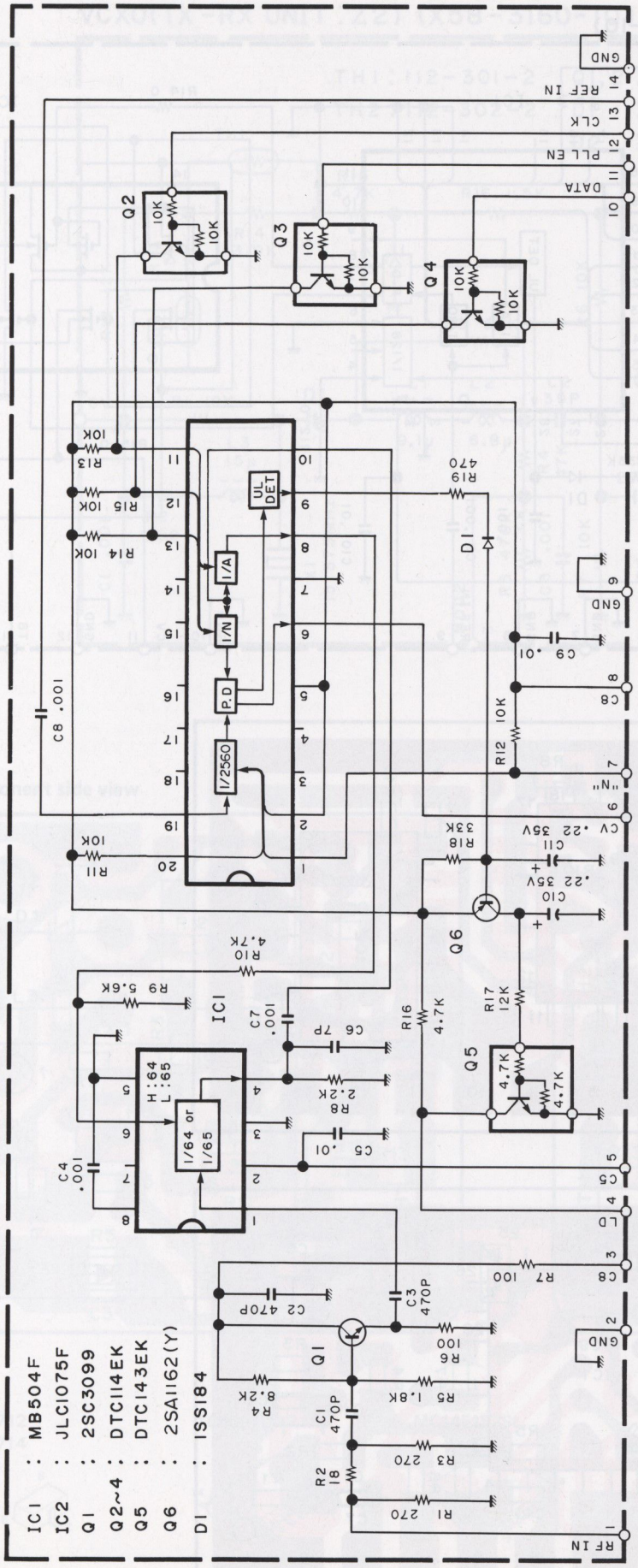

Foil side view

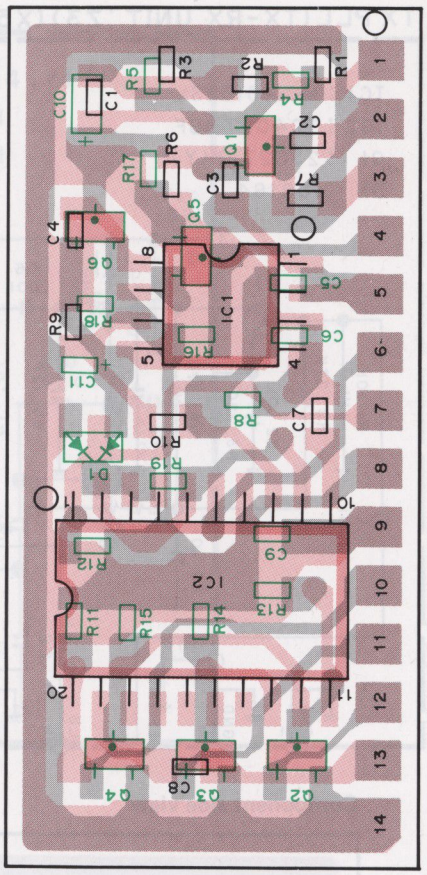

Component side view

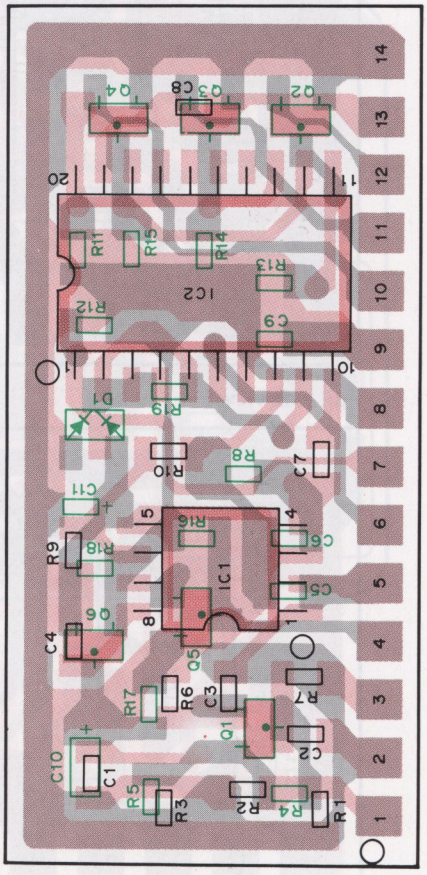

PC BOARD VIEWS/CIRCUIT DIAGRAMS TKB-720

COMMON VCO : Z1 (X58-3290-10)

(X58-3290-10)

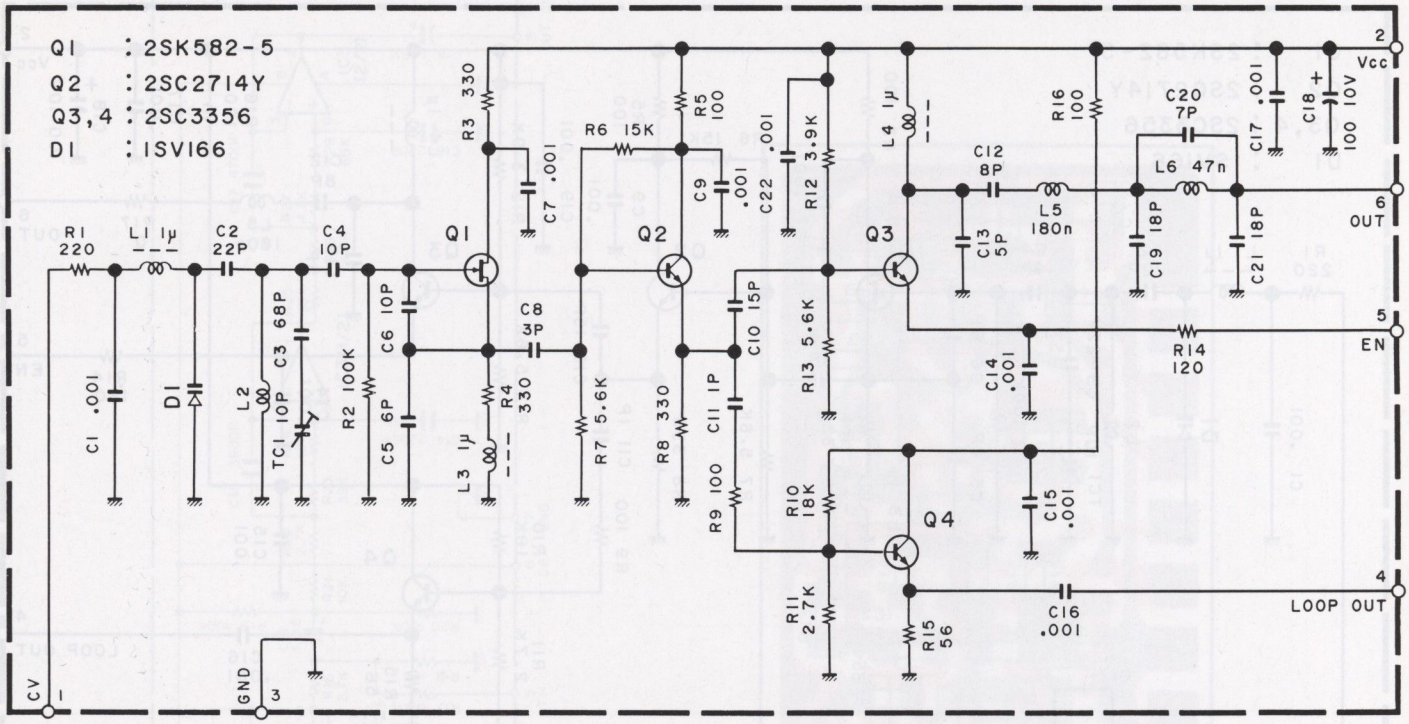

Component side view

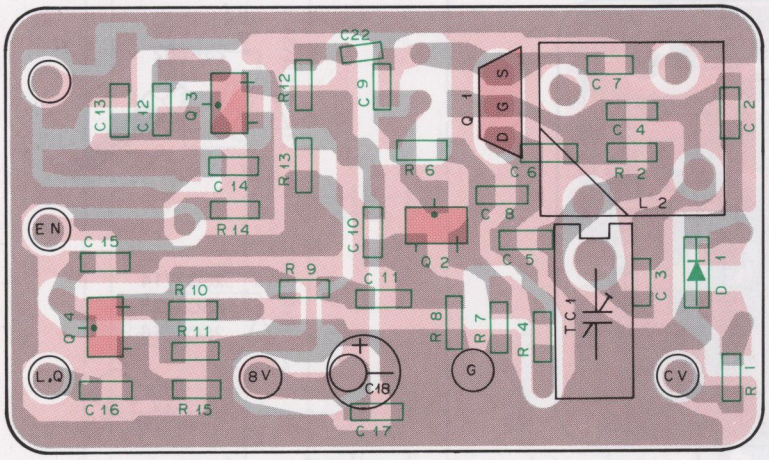

Foil side view

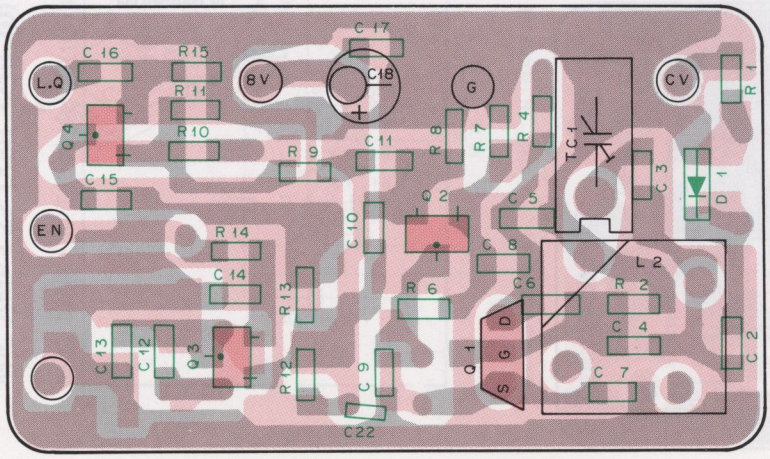

2SA1162 DTC114EK
2SC2714 DTC143EK
2SC3099
2SC3356

2SK582

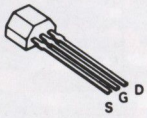

MB504F

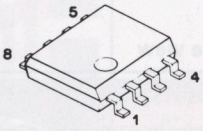

JLC1075F

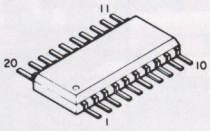

TKB-720 PC BOARD VIEWS/CIRCUIT DIAGRAMS

TX-VCO : Z4 (X58-3300-10)

(X58-3300-10)

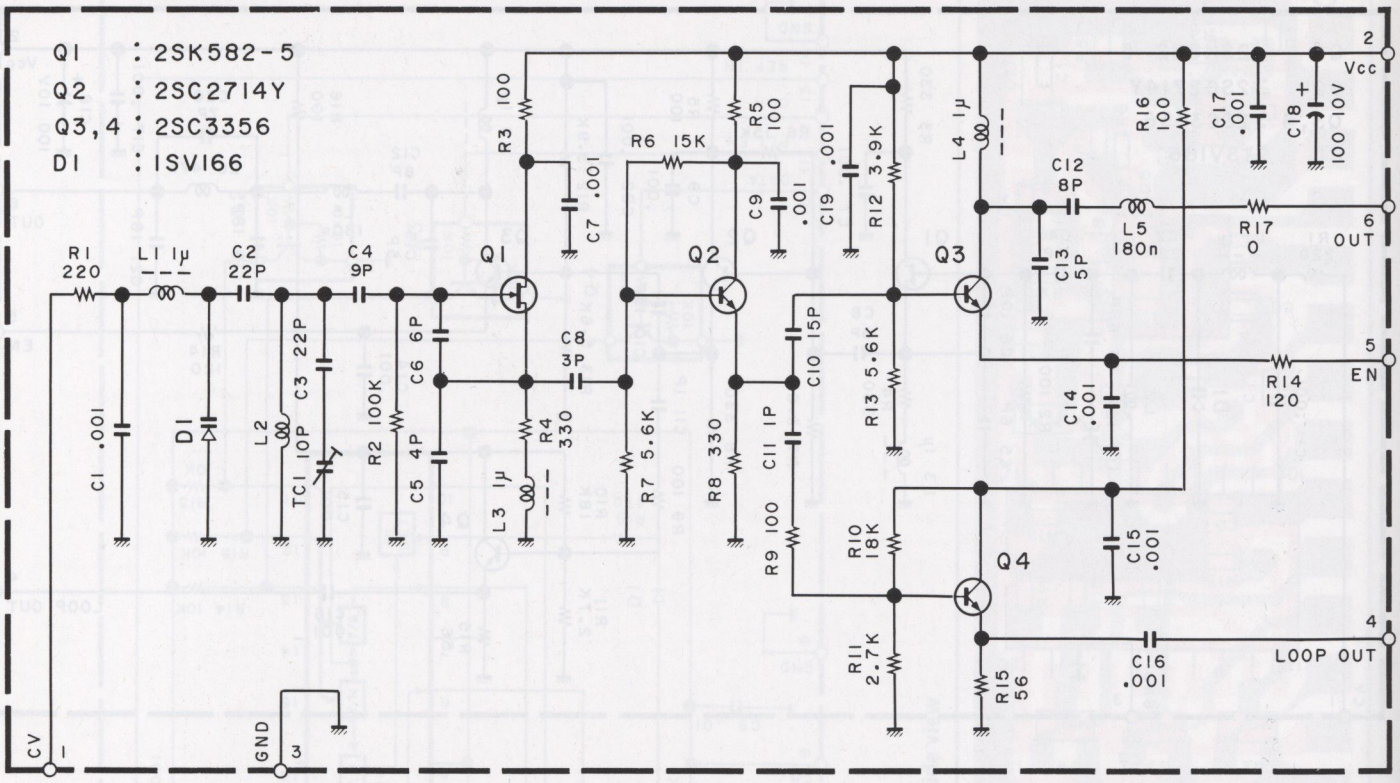

Component side view

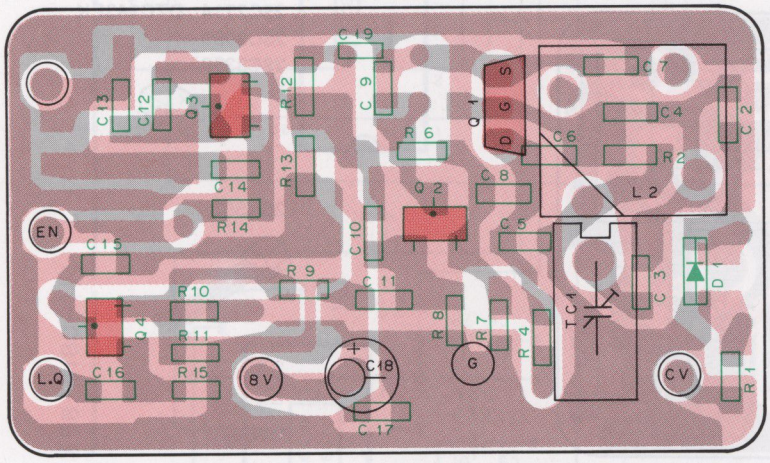

Foil side view

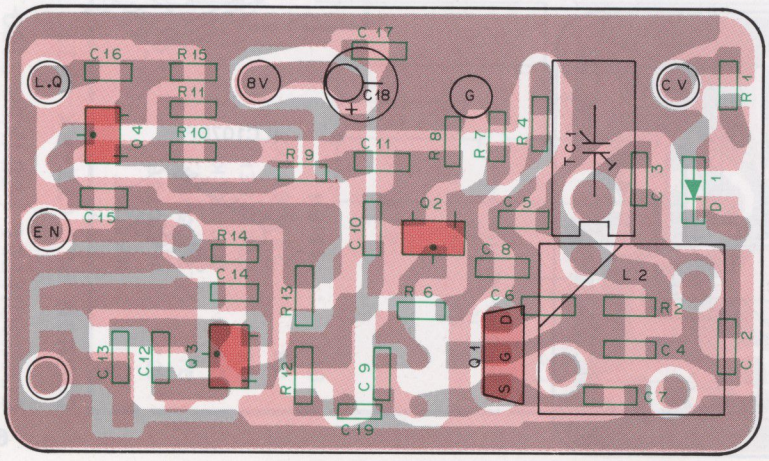

2SK582

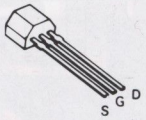

2SC2714
2SC3326
2SC3356

NJM4558M
NJM4560M

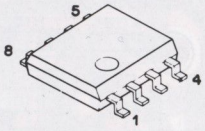

MIC AMP : Z7 (X59-3210-10)

MIC AMP UNIT (X59-3210-10)

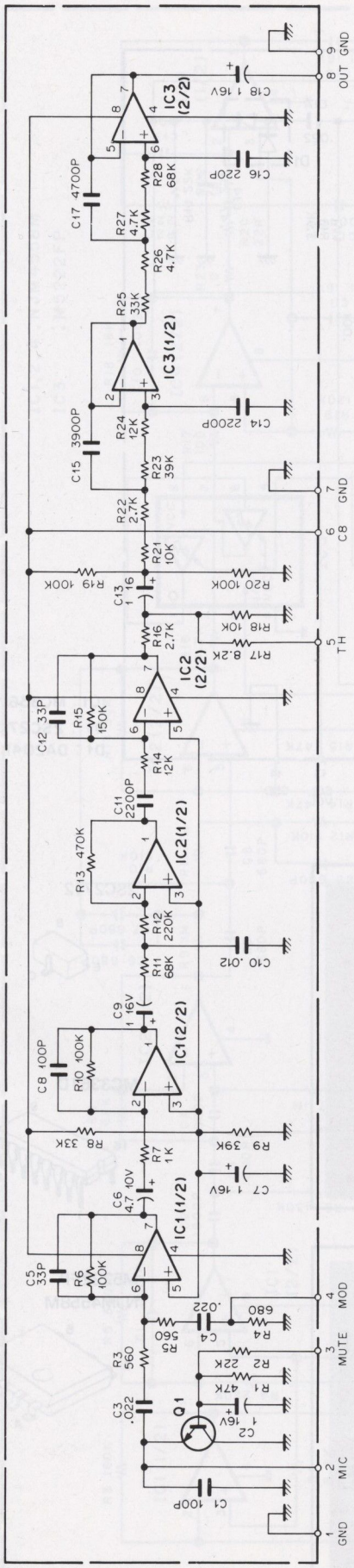

Q1 : 2SC3326(A) IC1 : NJM4560M IC2,3 : NJM4558M

Foil side view

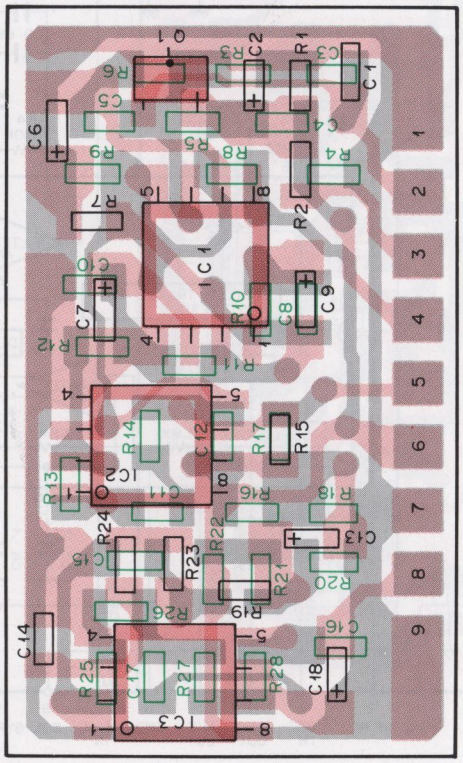

Component side view

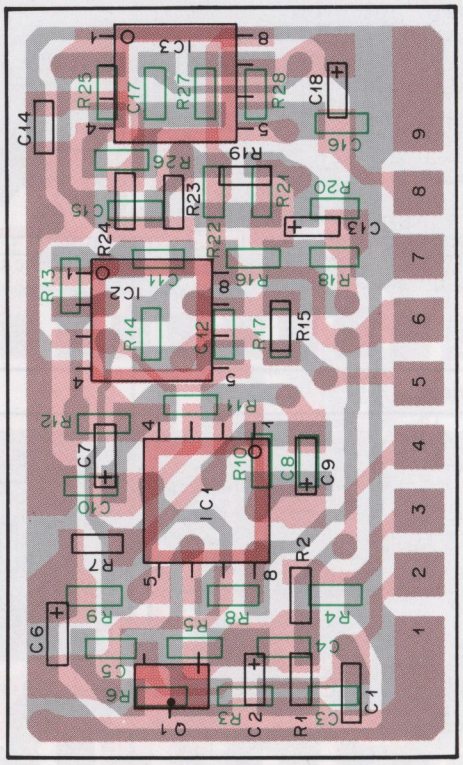

TKB-720 PC BOARD VIEWS/CIRCUIT DIAGRAMS

IF : Z8 (X59-3220-10)

IF UNIT (X59-3220-10)

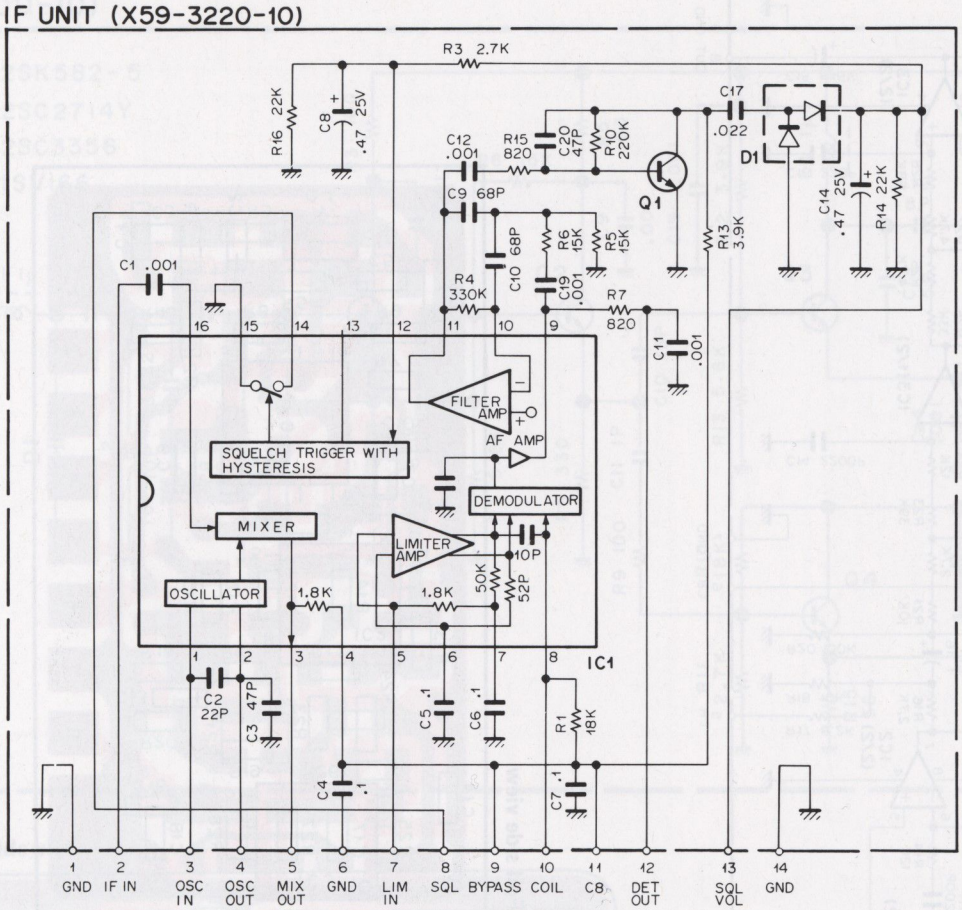

IC1 : MC3361D
Q1 : 2SC2712(Y)
D1 : DA204K

Component side view

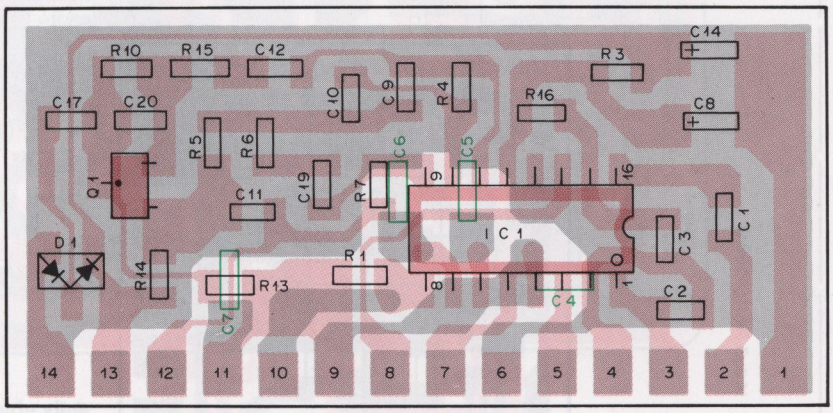

Foil side view

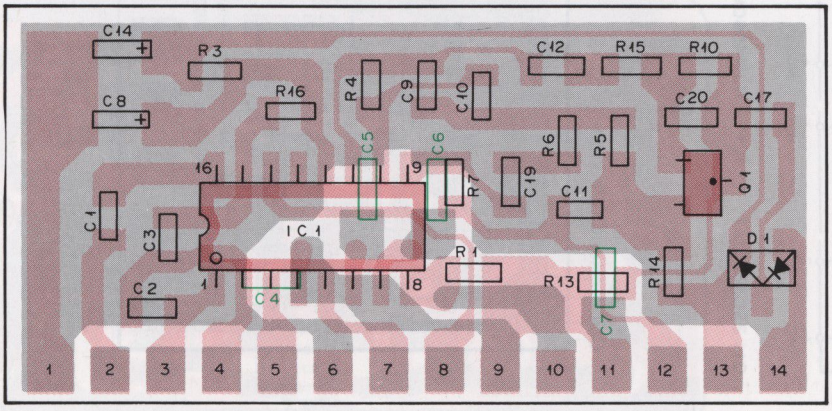

2SC2712

MC3361D

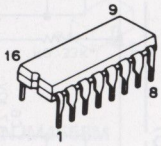

M5222FP
NJM4558M

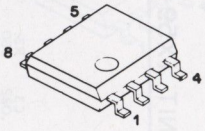

PC BOARD VIEWS/CIRCUIT DIAGRAMS TKB-720

BPF/VCA : Z9 (X59-3230-10)

BPF/VCA (TX-RX UNIT : Z9) (X59-3230-10)

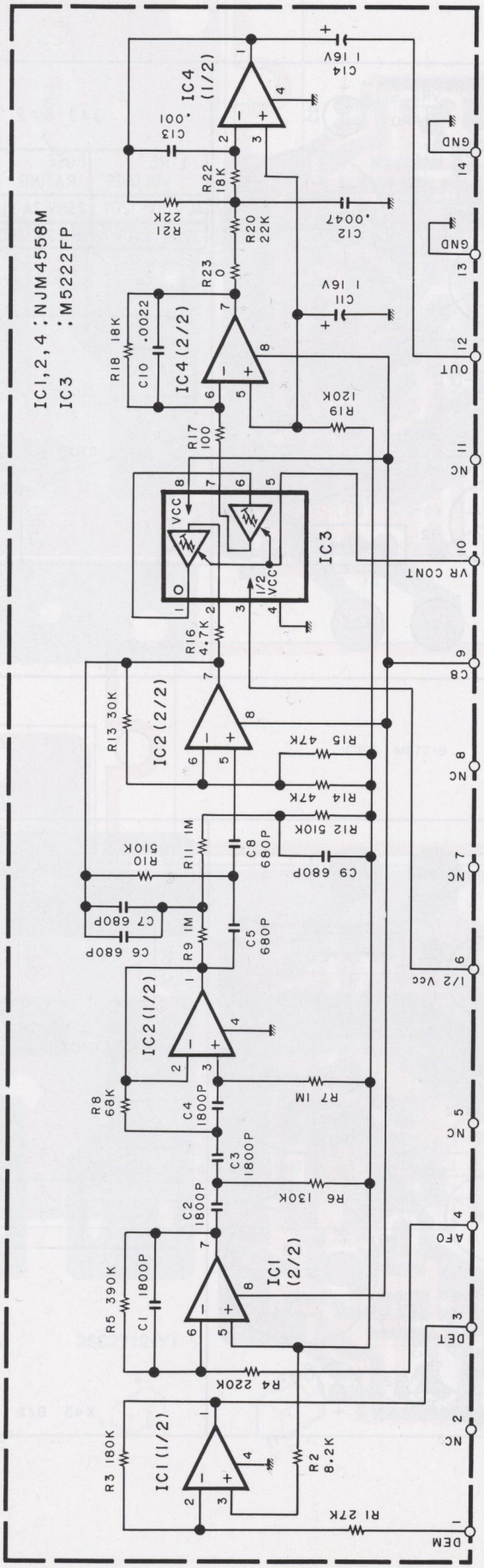

Foil side view

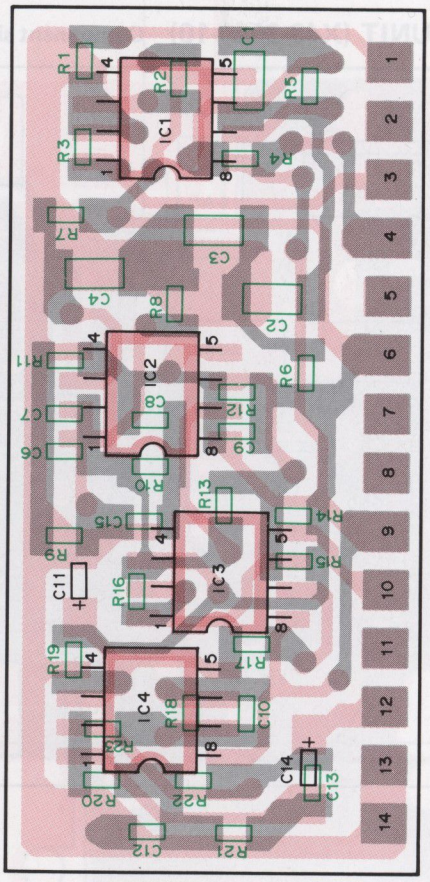

Component side view

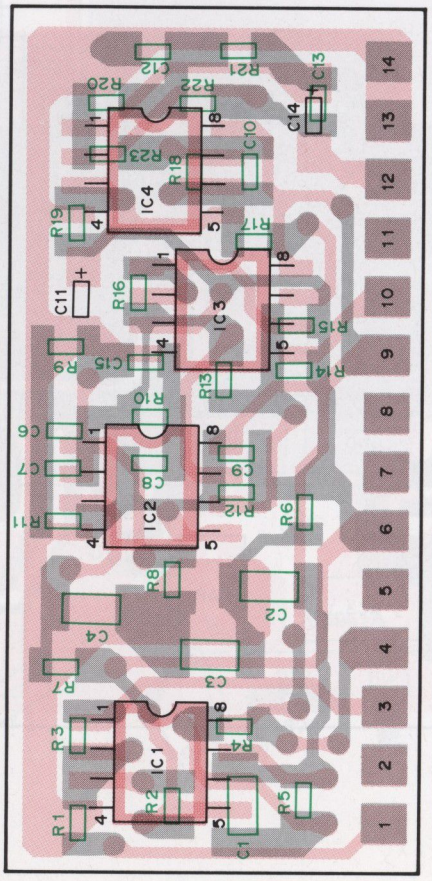

TKB-720 PC BOARD VIEWS

AVR UNIT (X43-3040-10) Component side view

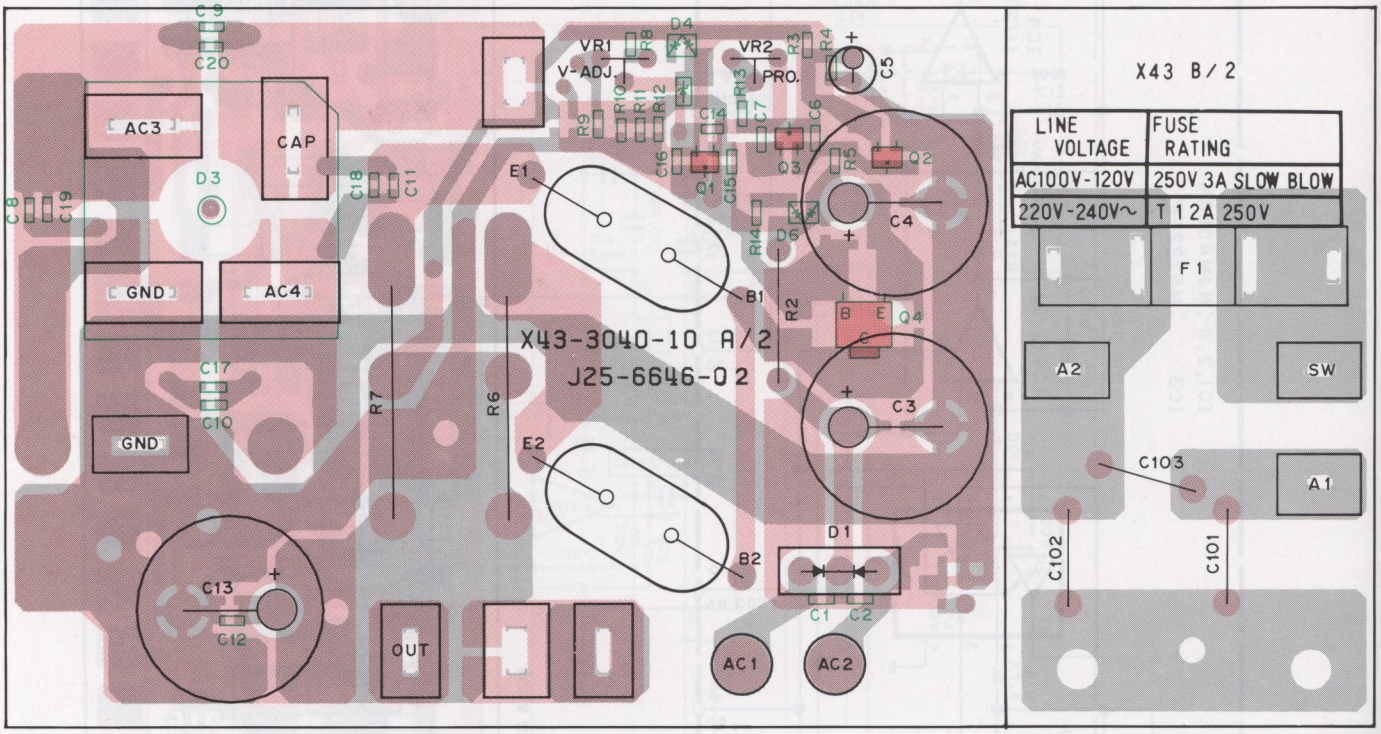

Foil side view

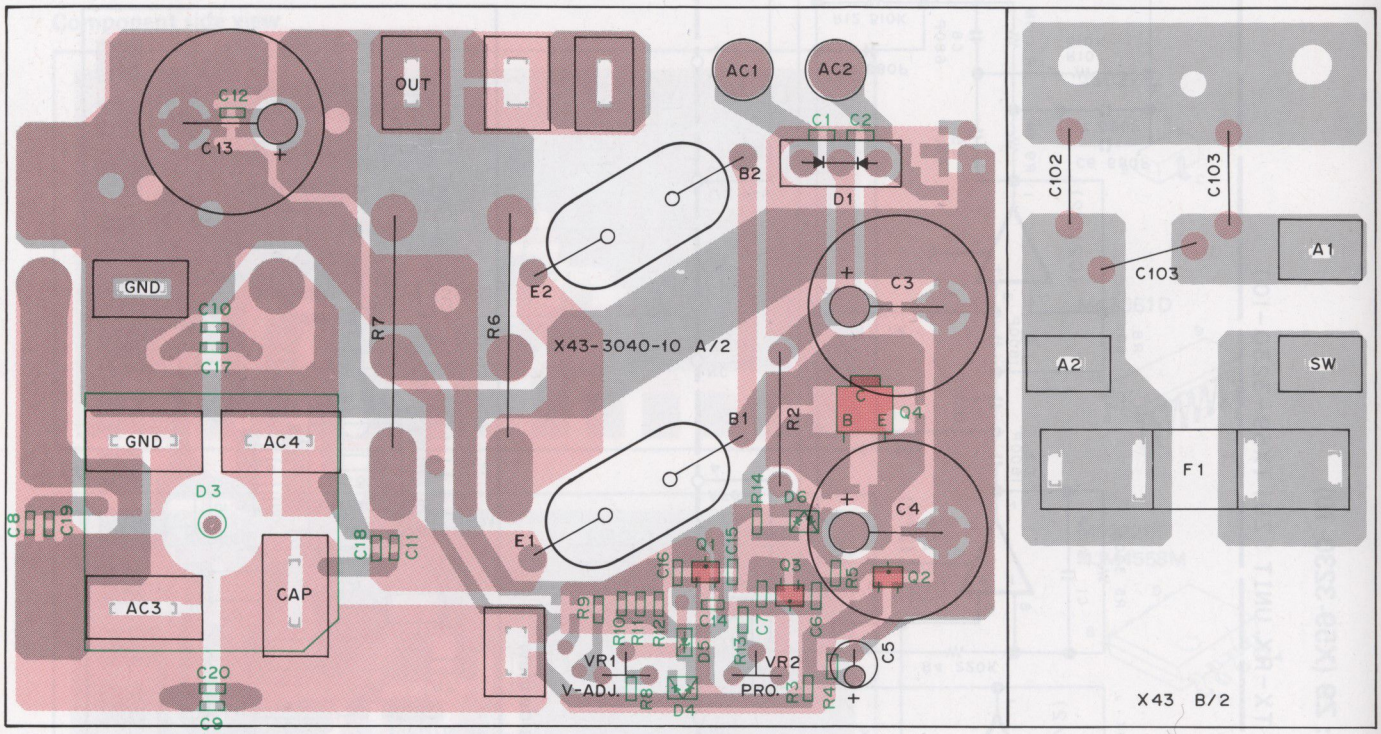

PC BOARD VIEWS TKB-720

DRIVE UNIT (X45-3310-10) Component side view

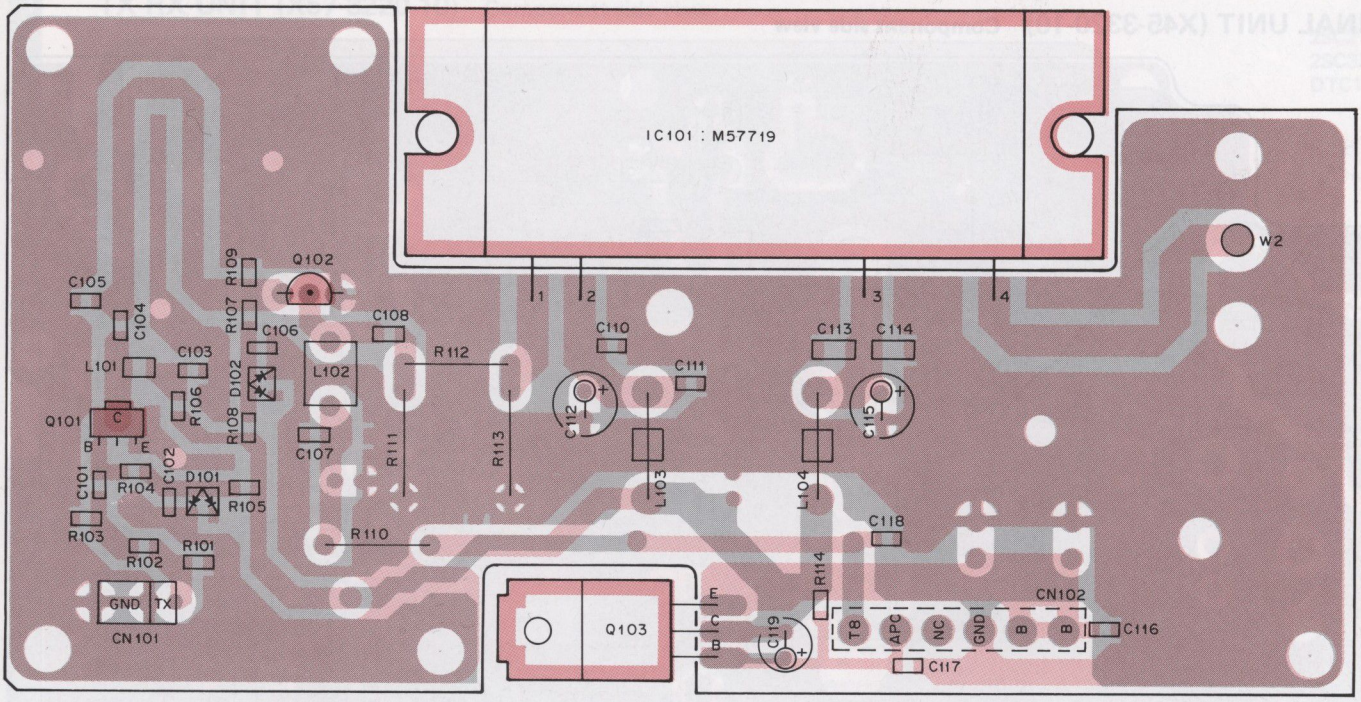

Foil side view

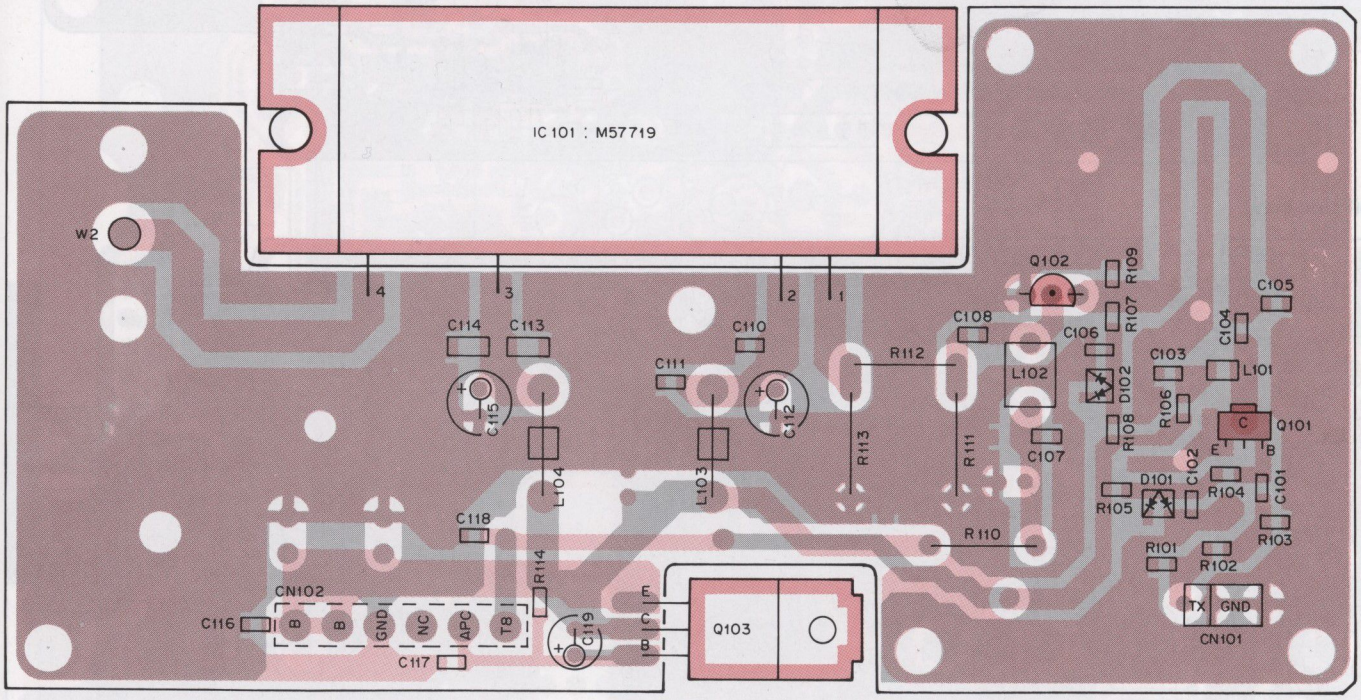

2SC2538-22-A

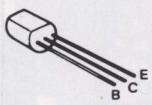

2SC2712(Y)

2SC2954

2SB968

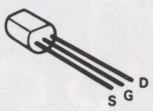

M57719

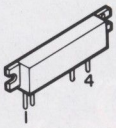

2N5885

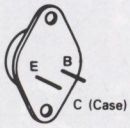

2SB951A

TKB-720 PC BOARD VIEWS

FINAL UNIT (X45-3320-10) Component side view

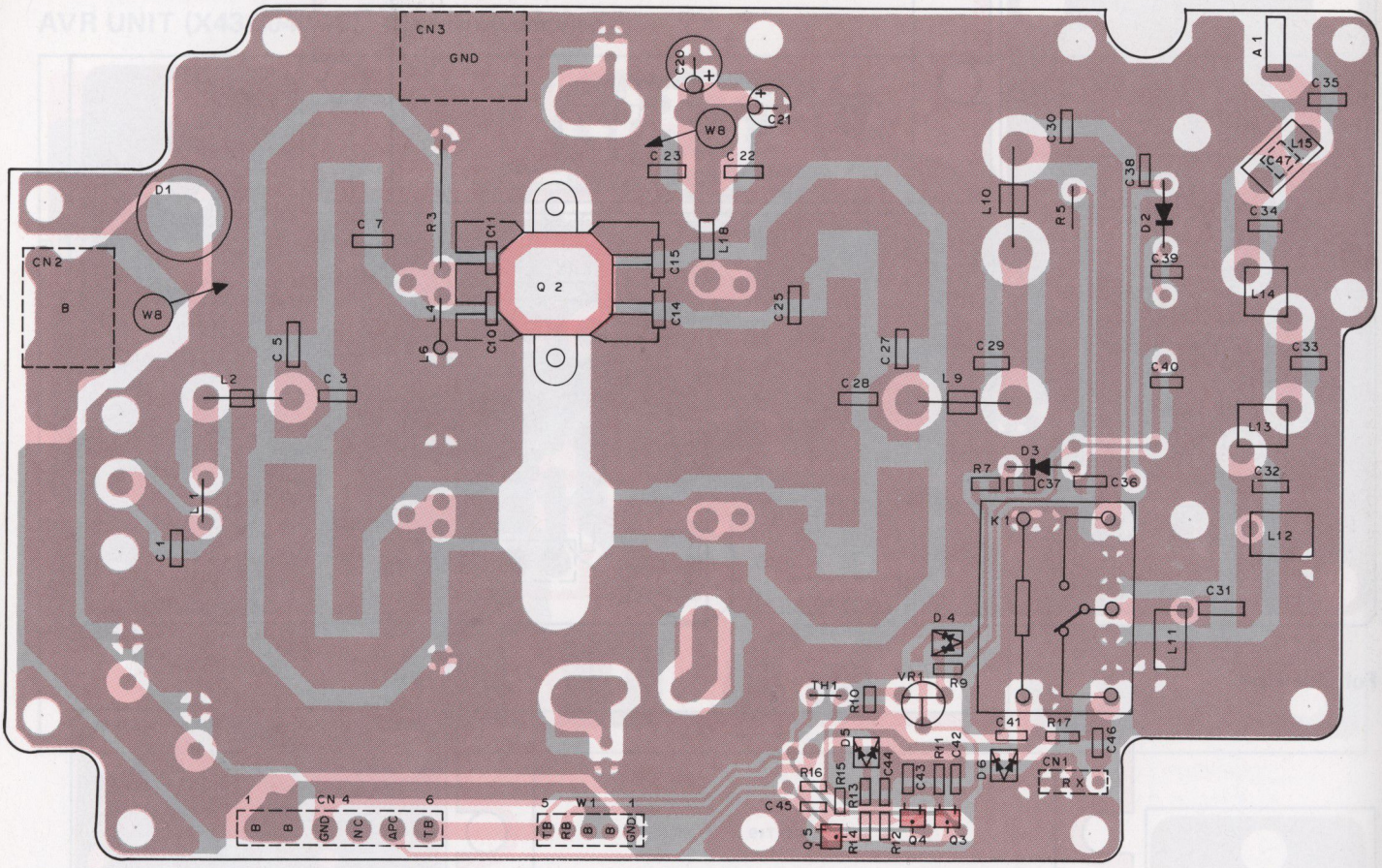

Foil side view

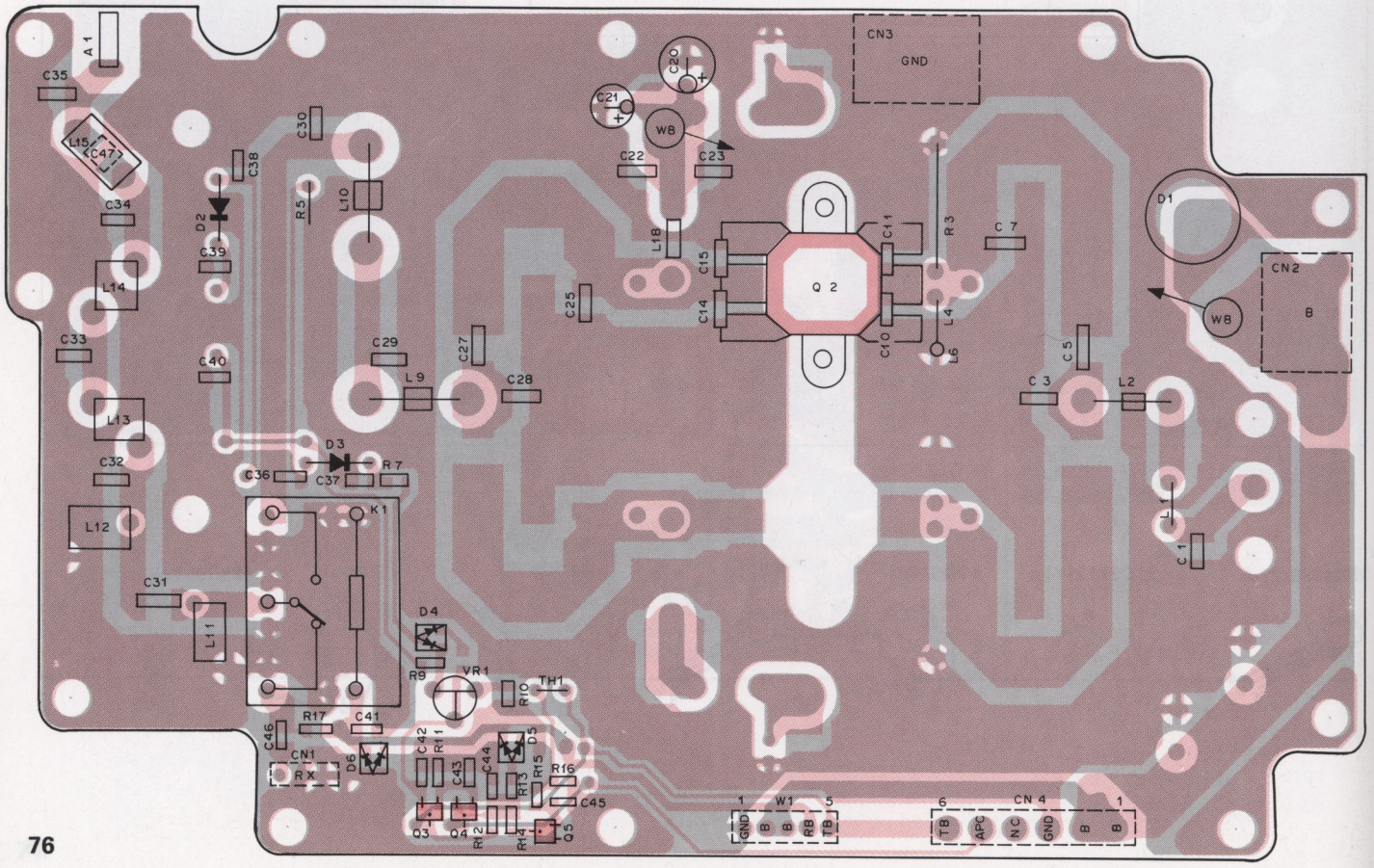

DISPLAY UNIT (X54-3070-10) Component side view

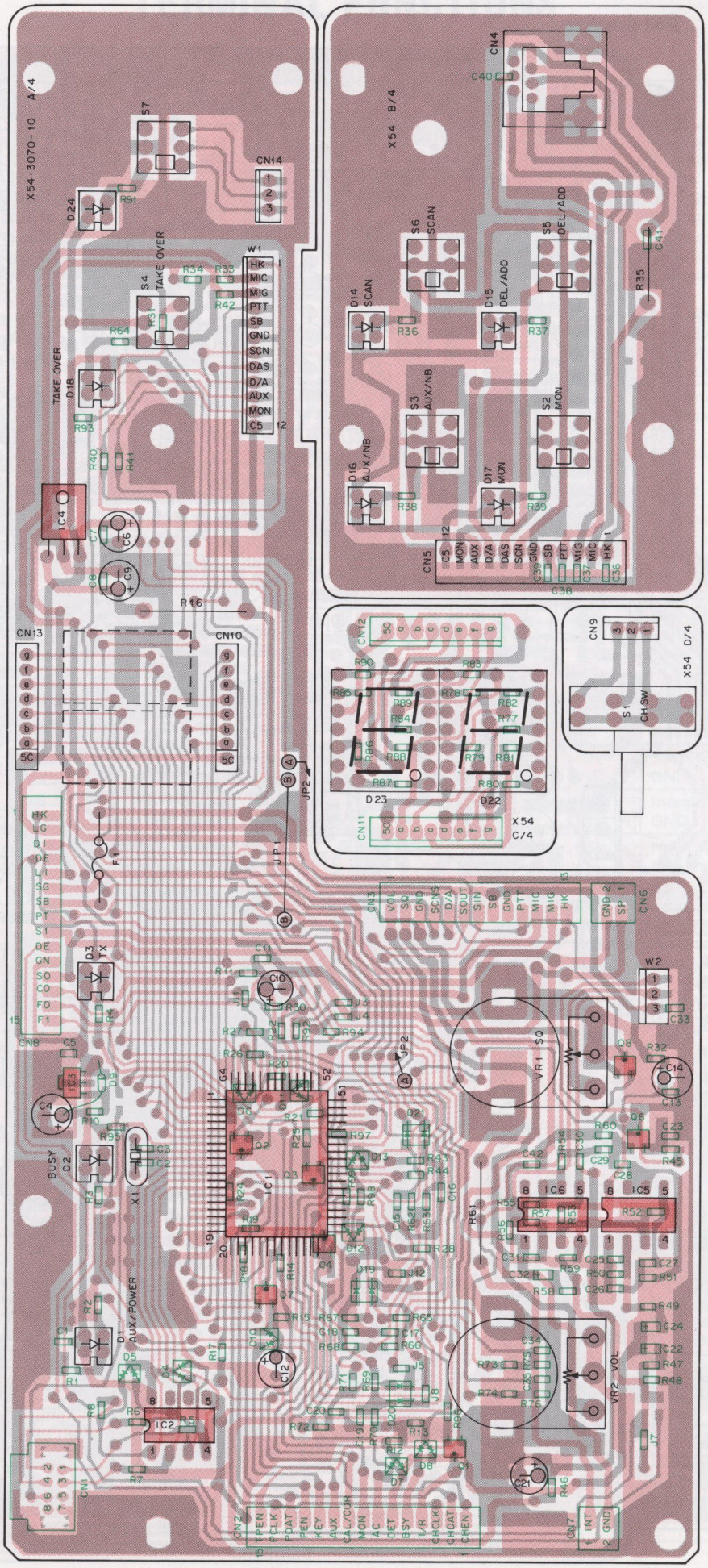

PC BOARD VIEWS TKB-720

Foil side view

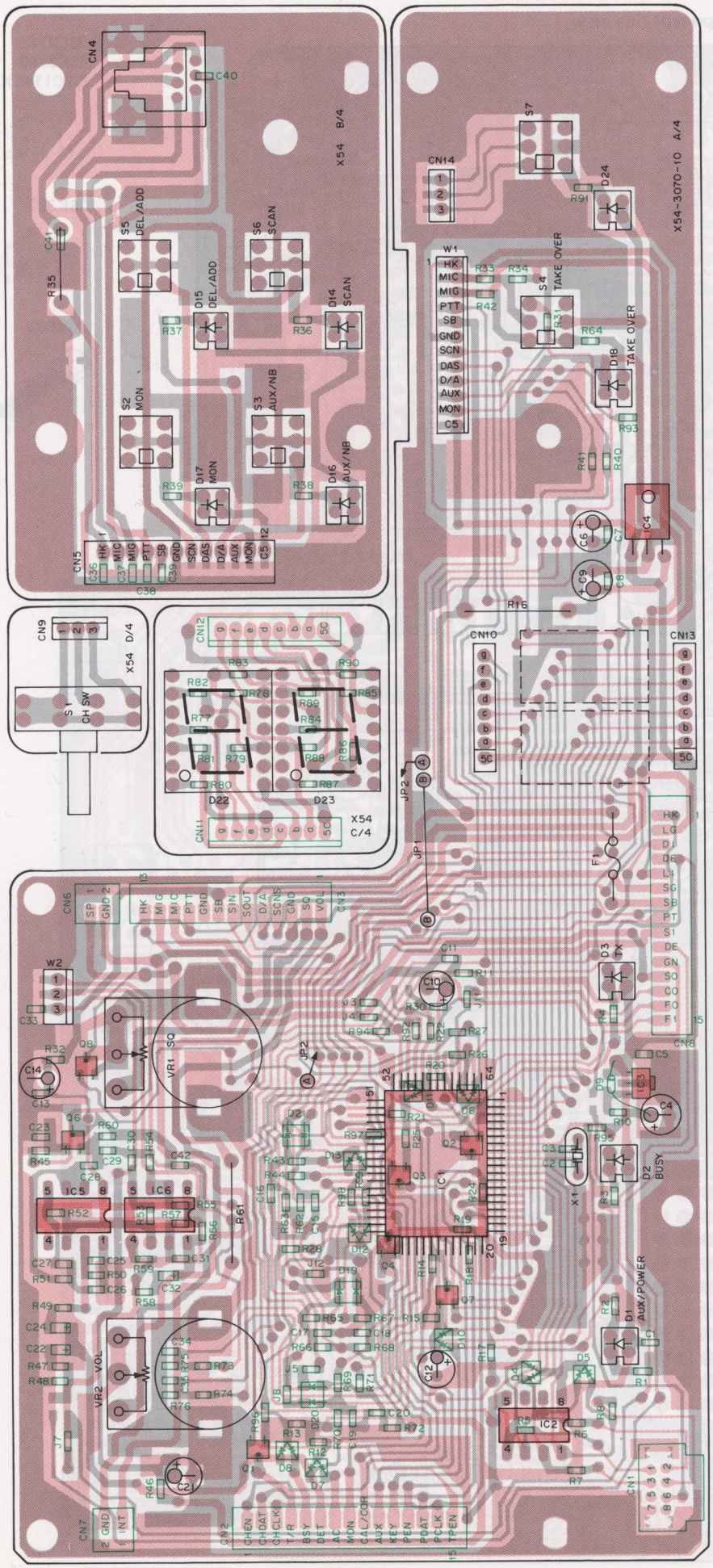

2SA1162
2SC2712
2SC3326
DTC114EK

93C46PI

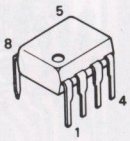

μPC4558C

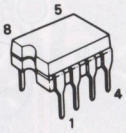

M51943BML

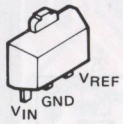

μPD75104G-562-1B

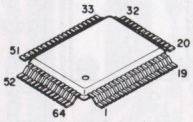

2SC2694

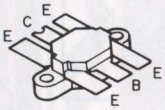

AN78N05

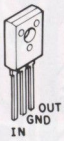

TKB-720 PC BOARD VIEWS

TX-RX UNIT (X57-3220-10) Component side view

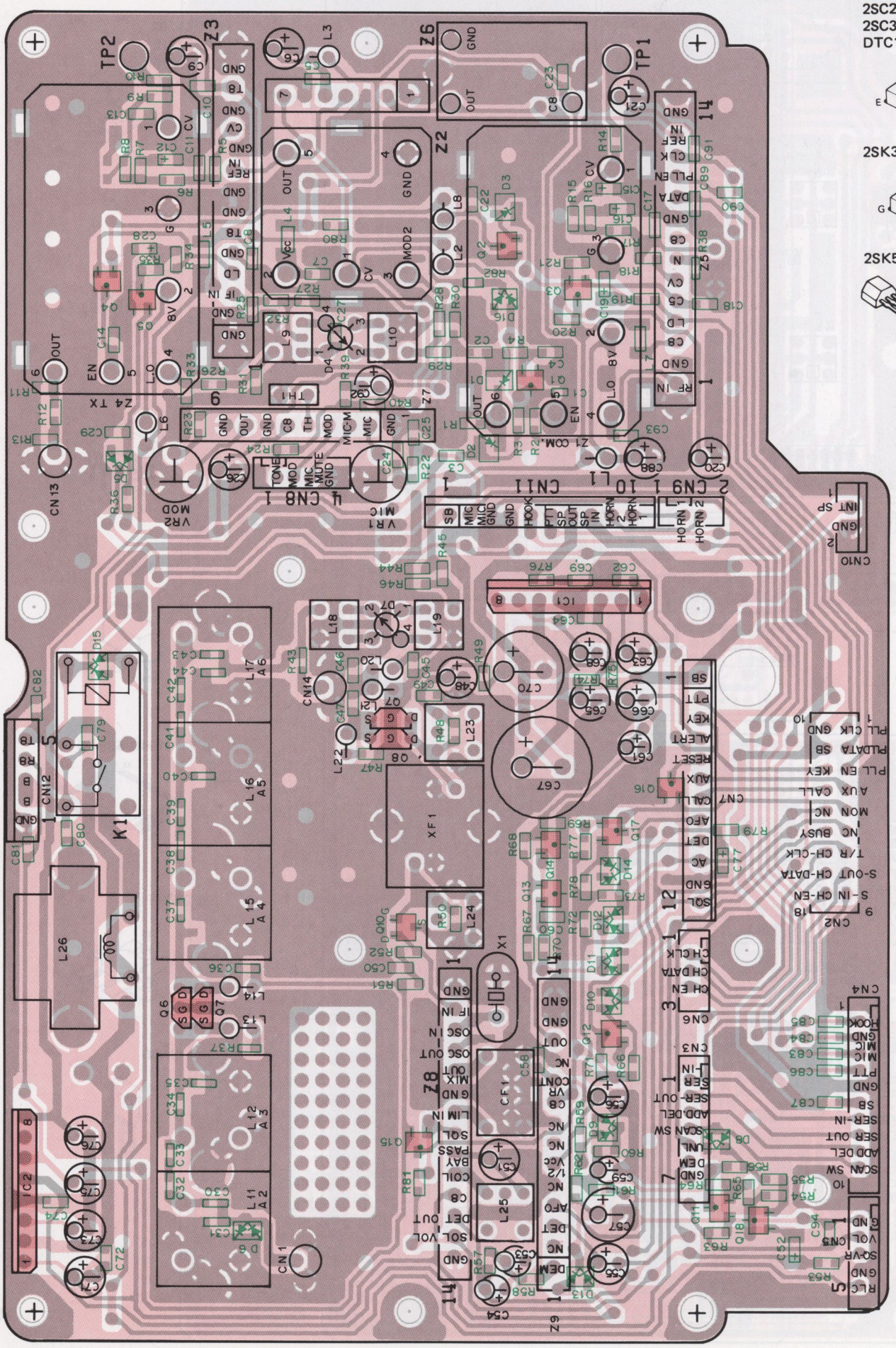

2SC2712
2SC3326
DTC114EK

2SK302

2SK582

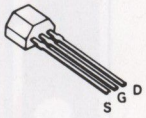

MB3756
μPC1242H

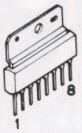

Foil side view

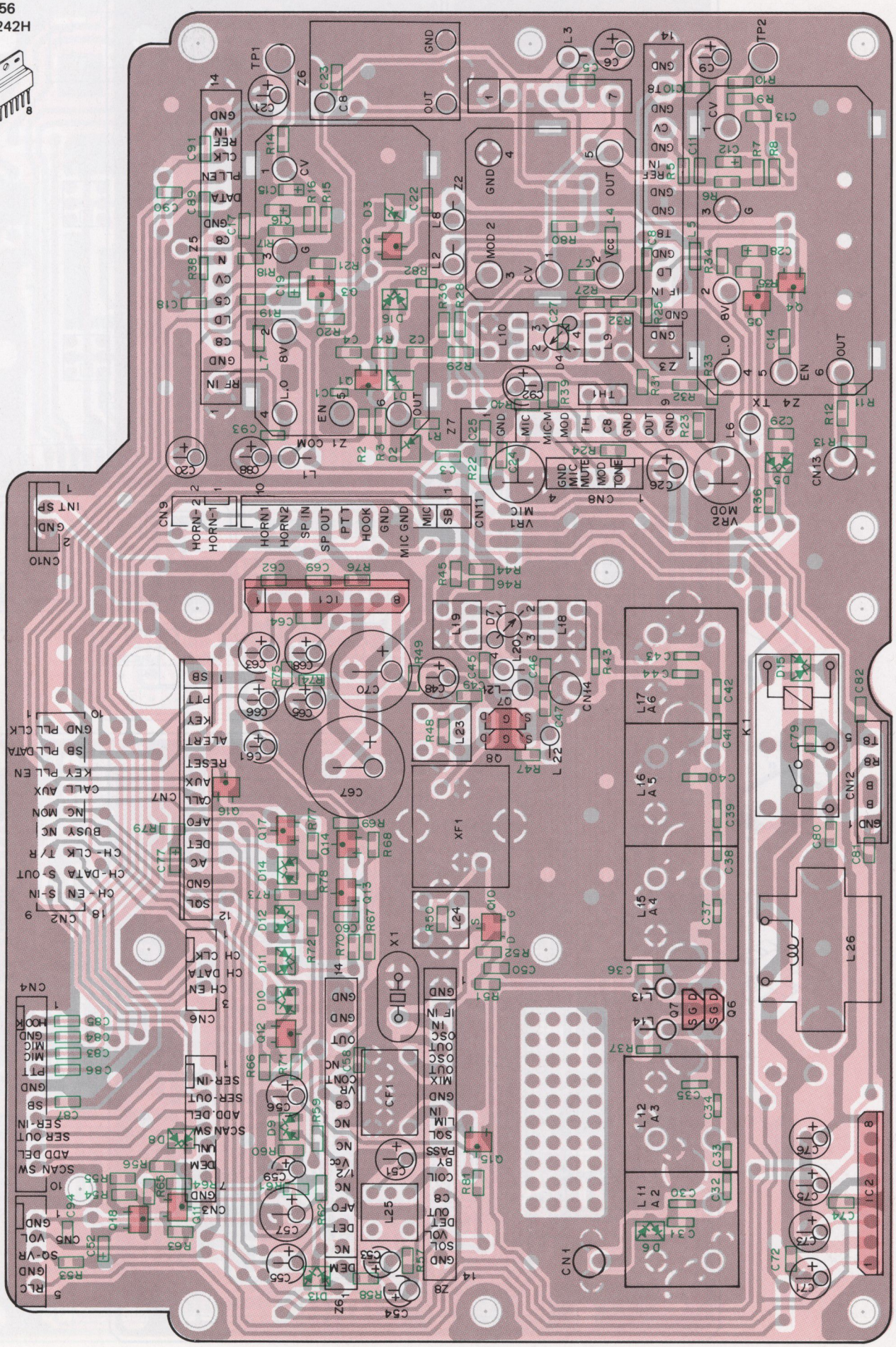

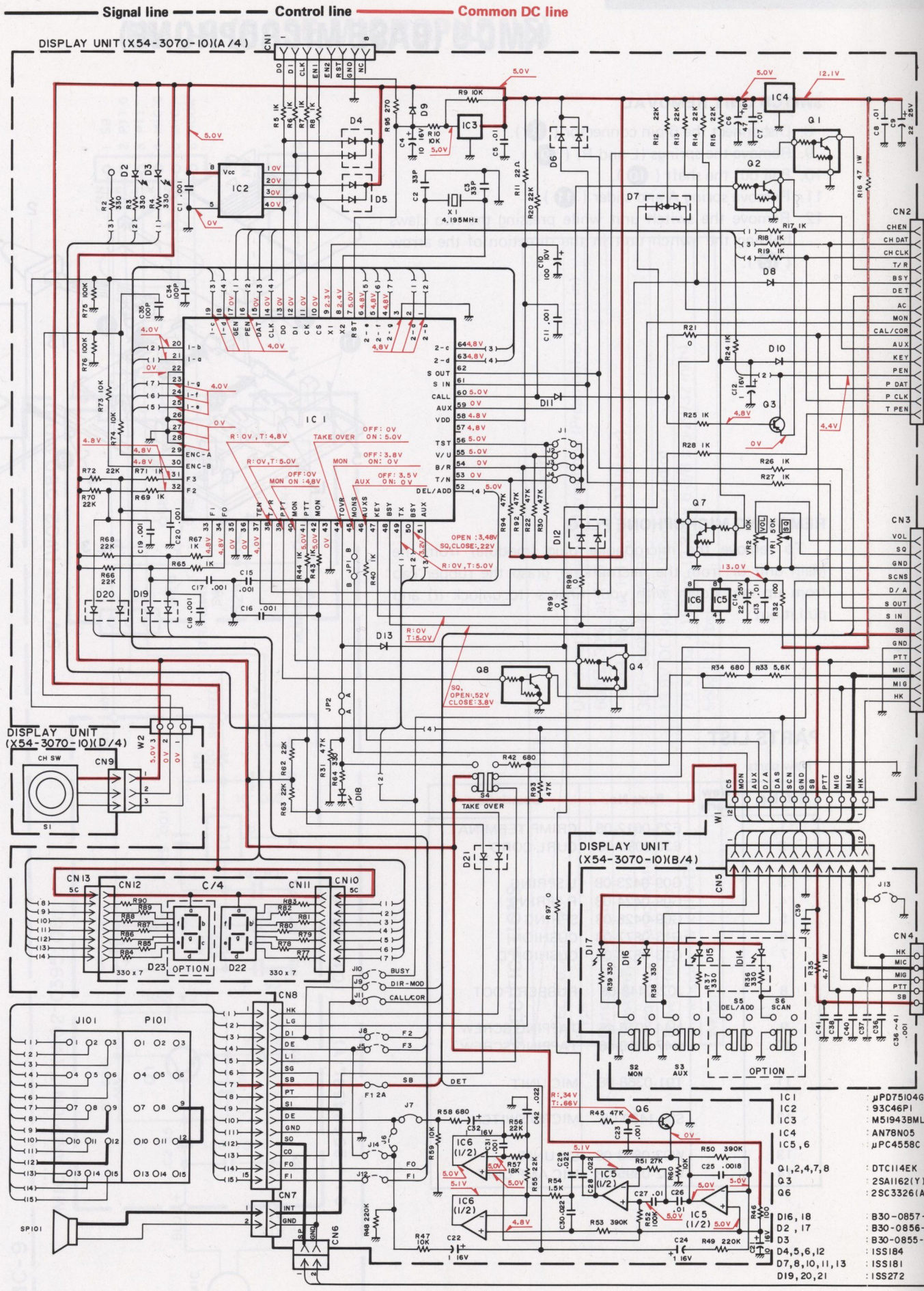
Signal line
Control line
Common DC line
DISPLAY UNIT (X54-3070-10)(A/4)
DISPLAY UNIT (X54-3070-10)(D/4)
DISPLAY UNIT (X54-3070-10)(B/4)
IC1 μPD75104G-56
IC2 93C46P1
IC3 M51943BML
IC4 AN78N05
IC5,6 μPC4558C
Q1,2,4,7,8 DTC114EK
Q3 2SA1162(Y)
Q6 2SC3326(A)
D16, 18 B30-0857-05
D2, 17 B30-0856-05
D3 B30-0855-05
D4,5,6,12 1SS184
D7,8,10,11,13 1SS181
D19,20,21 1SS272

SCHEMATIC D

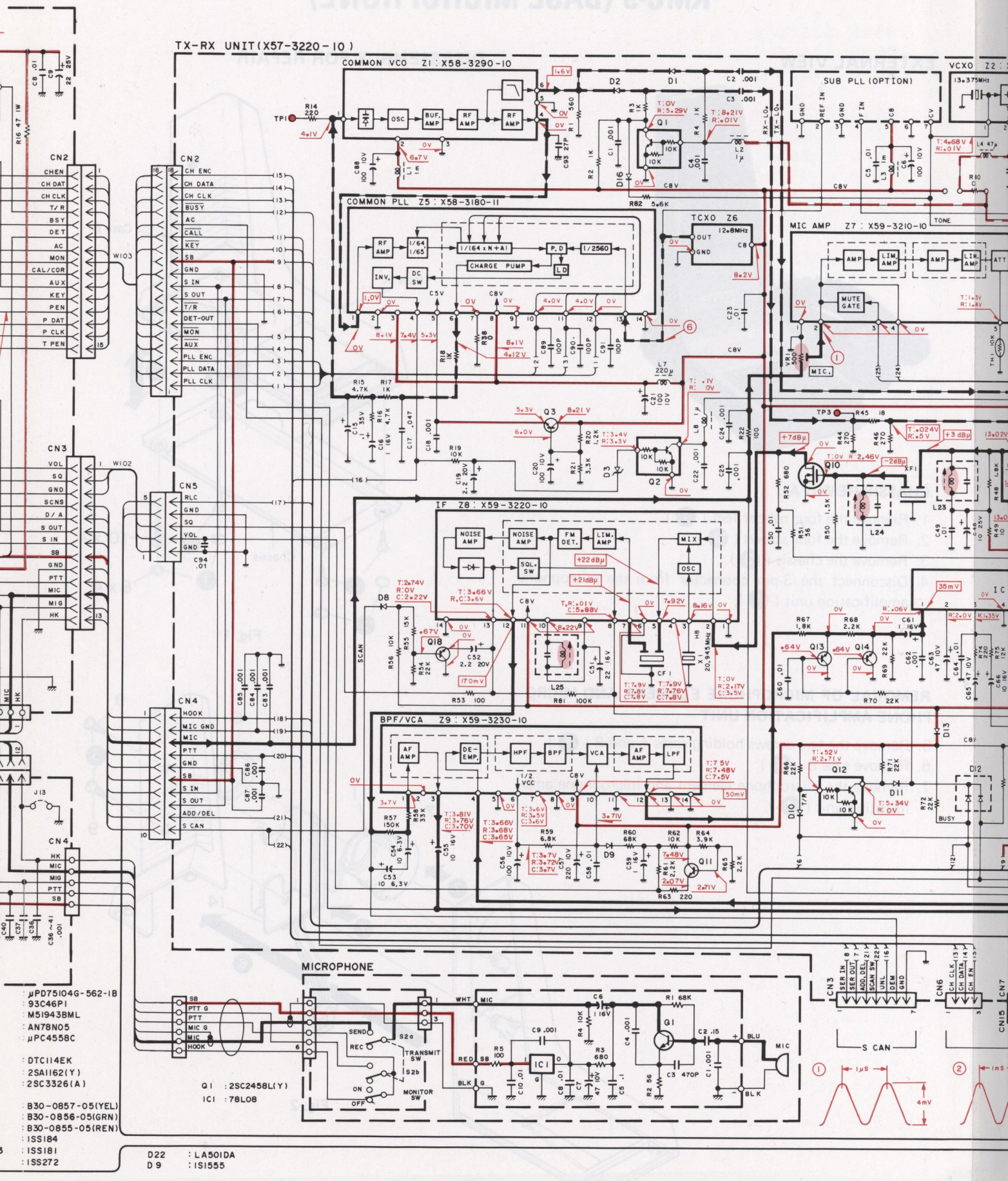
TX-RX UNIT(X57-3220-10)
COMMON VCO Z1 : X58-3290-10
COMMON PLL Z5 : X58-3180-11
TCXO Z6
SUB PLL (OPTION)
VCXO Z2
MIC AMP Z7 : X59-3210-10
IF Z8 : X59-3220-10
BPF/VCA Z9 : X59-3230-10
MICROPHONE
CN2
CN3
CN4
CN5
CN6
S CAN
μPD75104G-562-1B
93C46P1
M51943BML
AN78N05
μPC4558C
DTC114EK
2SA1162(Y)
2SC3326(A)
B30-0857-05(YEL)
B30-0856-05(GRN)
B30-0855-05(REN)
1SS184
1SS181
1SS272
Q1 : 2SC2458L(Y)
IC1 : 78L08
D22 : LA5101DA
D9 : 1S1555

C DIAGRAM

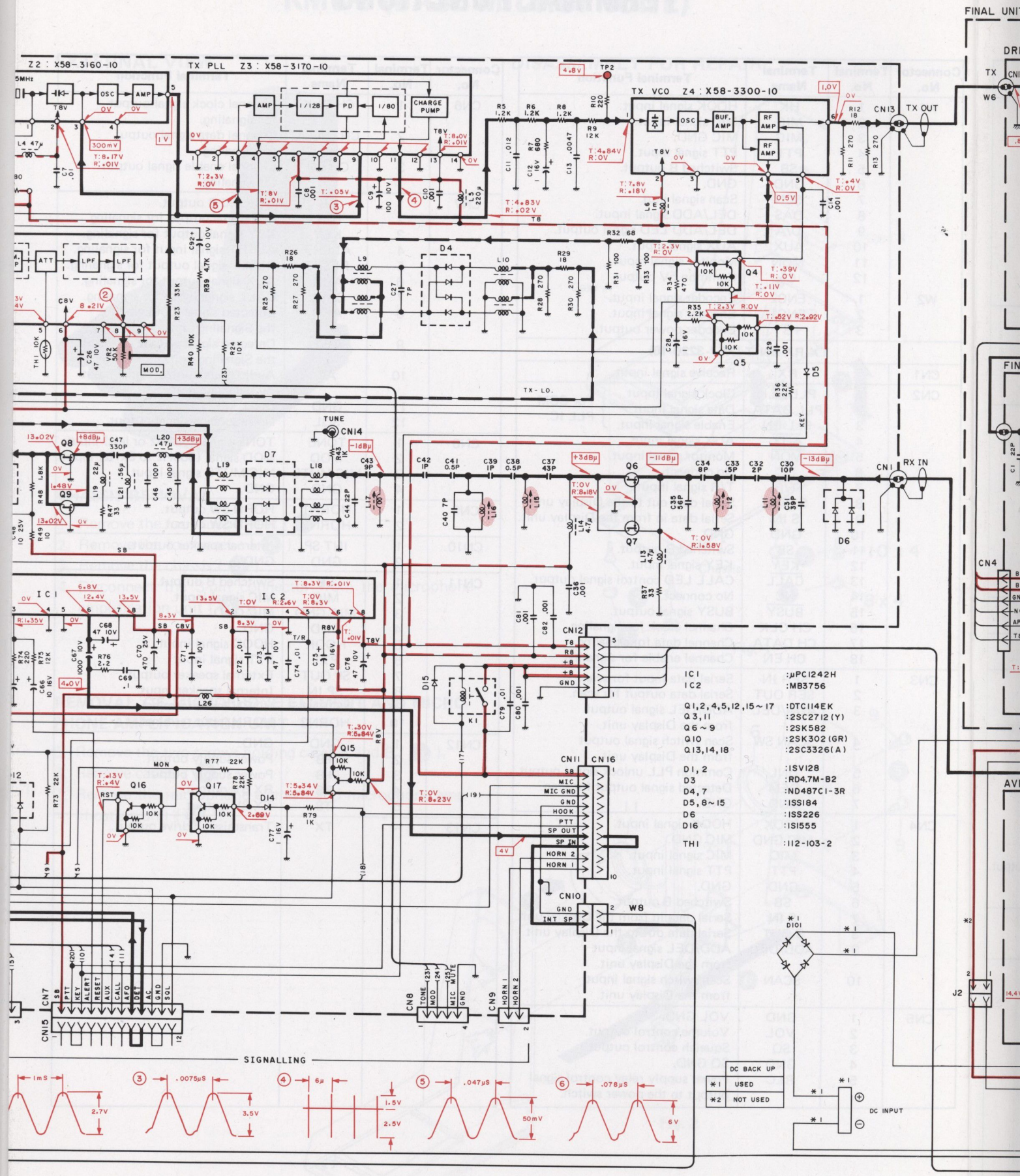

K
L
M
N
O
FINAL UNIT
Z2 : X58-3160-10
TX PLL Z3 : X58-3170-10
TX VCO Z4 : X58-3300-10
CHARGE PUMP
TX OUT
RX IN
TUNE
CN14
CN13
CN12
CN11
CN16
CN10
CN7
CN15
CN8
CN9
CN4
IC1 :μPC1242H
IC2 :MB3756
Q1,2,4,5,12,15~17 :DTC114EK
Q3,11 :2SC2712(Y)
Q6~9 :2SK582
Q10 :2SK302(GR)
Q13,14,18 :2SC3326(A)
D1,2 :1SV128
D3 :RD4.7M-B2
D4,7 :ND487C1-3R
D5,8~15 :1SS184
D6 :1SS226
D16 :1S1555
TH1 :112-103-2
DC BACK UP
*1 USED
*2 NOT USED
DC INPUT
SIGNALLING

TKB-720

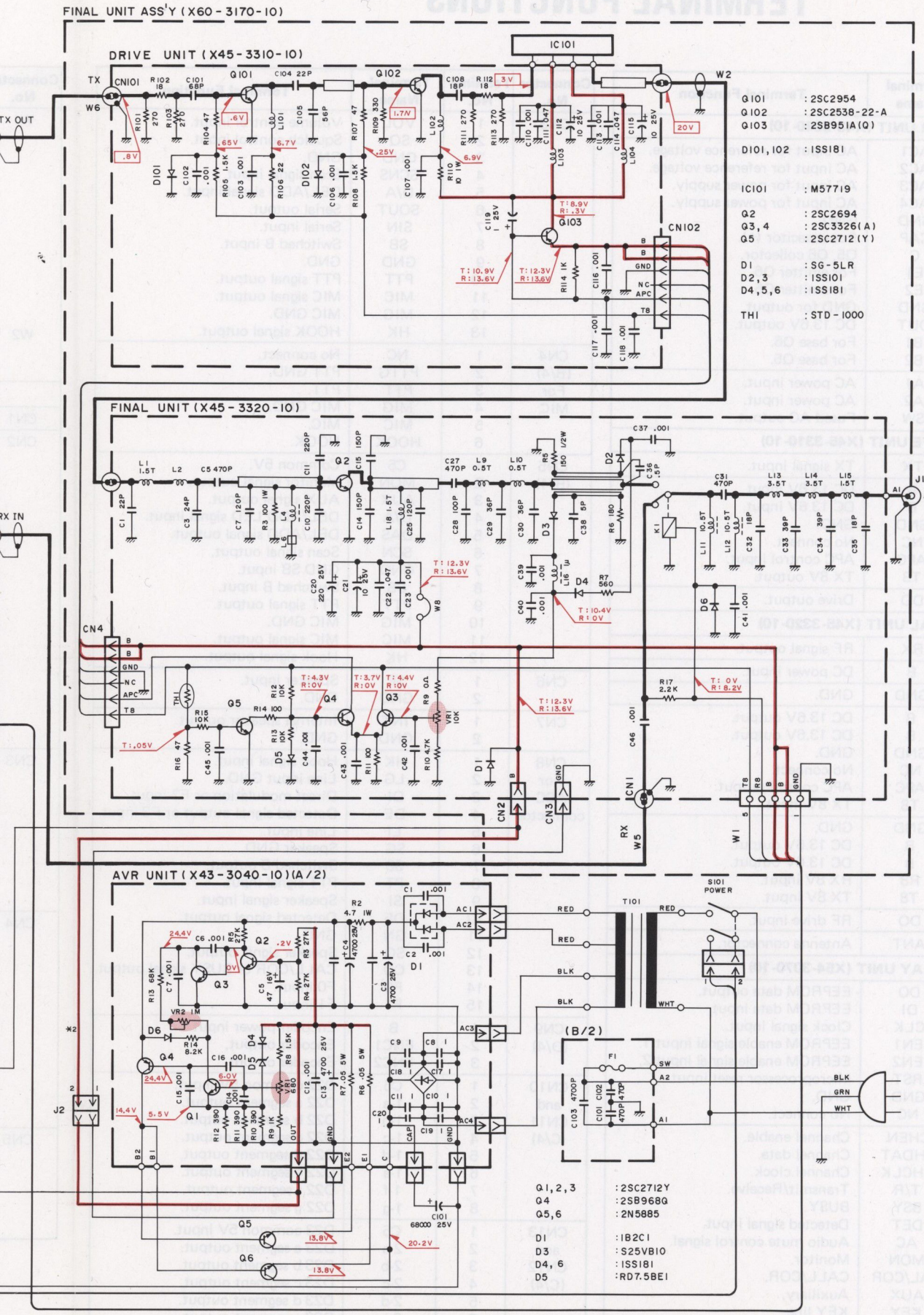
FINAL UNIT ASS'Y (X60-3170-10)
DRIVE UNIT (X45-3310-10)
FINAL UNIT (X45-3320-10)
AVR UNIT (X43-3040-10)(A/2)
TX OUT
RX IN
ANT
IC101
CN101
CN102
CN4
CN1
CN2
CN3
W1
W2
W5
W6
W8
J1
J2
T101
S101 POWER
(B/2)
Q101 : 2SC2954
Q102 : 2SC2538-22-A
Q103 : 2SB951A(Q)
D101, 102 : 1SS181
IC101 : M57719
Q2 : 2SC2694
Q3, 4 : 2SC3326(A)
Q5 : 2SC2712(Y)
D1 : SG-5LR
D2, 3 : 1SS101
D4, 5, 6 : 1SS181
TH1 : STD-1000
Q1, 2, 3 : 2SC2712Y
Q4 : 2SB968Q
Q5, 6 : 2N5885
D1 : 1B2C1
D3 : S25VB10
D4, 6 : 1SS181
D5 : RD7.5BE1

TERMINAL FUNCTIONS

Connector No.	Terminal No.	Terminal Name	Terminal Function
AVR UNIT (X43-3040-10)			
(A/2)		AC1	AC input for reference voltage.
		AC2	AC input for reference voltage.
		AC3	AC input for power supply.
		AC4	AC input for power supply.
		GND	GND.
		CAP	For capacitor (+).
		C	Q5, Q6 collector.
		E1	For emitter Q6.
		E2	For emitter Q5.
		GND	GND for output.
		OUT	DC 13.6V output.
		B1	For base Q6.
		B2	For base Q5.
(B/2)		A1	AC power input.
		A2	AC power input.
		SW	Fused AC output.
DRIVE UNIT (X45-3310-10)			
CN101	–	TX	TX signal input.
CN102	1	B	DC 13.6V input.
	2	B	DC 13.6V input.
	3	GND	GND.
	4	NC	No connect.
	5	APC	APC control input.
	6	T8	TX 8V output.
W2	–	DO	Drive output.
FINAL UNIT (X45-3320-10)			
CN1	–	RX	RF signal output.
CN2	–	B	DC power input.
CN3	–	GND	GND.
CN4	1	B	DC 13.6V output.
	2	B	DC 13.6V output.
	3	GND	GND.
	4	NC	No connect.
	5	APC	APC control output.
	6	T8	TX 8V input.
W1	1	GND	GND.
	2	B	DC 13.6V output.
	3	B	DC 13.6V output.
	4	R8	RX 8V input.
	5	T8	TX 8V input.
W2	–	DO	RF drive input.
J1	–	ANT	Antenna connector.
DISPLAY UNIT (X54-3070-10)			
CN1 For EEPROM Writer	1	DO	EEPROM data output.
	2	DI	EEPROM data input.
	3	CLK	Clock signal input.
	4	EN1	EEPROM enable signal input 1.
	5	EN2	EEPROM enable signal input 2.
	6	RST	Microprocessor reset input.
	7	GND	GND.
	8	NC	No connect.
CN2	1	CHEN	Channel enable.
	2	CHDAT	Channel data.
	3	CHCLK	Channel clock.
	4	T/R	Transmit/Receive.
	5	BSY	BUSY.
	6	DET	Detected signal input.
	7	AC	Audio mute control signal.
	8	MON	Monitor.
	9	CAL/COR	CALL/COR.
	10	AUX	Auxiliary.
	11	KEY	KEY line.
	12	PEN	PLL enable.
	13	PDAT	PLL data.
	14	PCLK	PLL clock.
	15	TPEN	TX PLL enable.

Connector No.	Terminal No.	Terminal Name	Terminal Function
CN3	1	VOL	Volume control input.
	2	SQ	Squelch control input.
	3	GND	GND.
	4	SCNS	Scan signal input.
	5	D/A	DEL/ADD signal input.
	6	SOUT	Serial output.
	7	SIN	Serial input.
	8	SB	Switched B input.
	9	GND	GND.
	10	PTT	PTT signal output.
	11	MIC	MIC signal output.
	12	MIG	MIC GND.
	13	HK	HOOK signal output.
CN4 (B/4) For MIC	1	NC	No connect.
	2	PTTG	PTT GND.
	3	PTT	PTT.
	4	MIG	MIC GND.
	5	MIC	MIC.
	6	HOOK	HOOK.
CN5 (B/4)	1	C5	Common 5V.
	2	MON	Monitor signal output.
	3	AUX	AUX signal output.
	4	D/A	DEL/ADD LED signal input.
	5	DAS	DEL/ADD signal output.
	6	SCN	Scan signal output.
	7	GND	GND SB input.
	8	SB	Switched B input.
	9	PTT	PTT signal output.
	10	MIG	MIC GND.
	11	MIC	MIC signal output.
	12	HK	Hook signal output.
CN6	1	SP	Speaker input.
	2	GND	GND.
CN7	1	INT	Internal speaker output.
	2	GND	GND.
CN8 For ACC connector	1	HK	Hook signal input.
	2	LG	Line input GND.
	3	DI	Direct modulation or F2 input.
	4	DE	Detected signal output or F3 input.
	5	LI	Line input.
	6	SG	Speaker GND.
	7	SB	Switched B output.
	8	PT	PTT signal input.
	9	SI	Speaker signal input.
	10	DE	Detected signal output.
	11	GN	GND.
	12	SO	Speaker signal output.
	13	CO	CALL/COR or BUSY signal output.
	14	F0	F0 input.
	15	F1	F1 input.
CN9 (D/4)	1	B	Encoder power input.
	2	ENC1	Encoder output.
	3	ENC2	Encoder output.
CN10 and CN11 (C/4)	1	C5	D22 common 5V input.
	2	1-a	D22 a segment output.
	3	1-b	D22 b segment output.
	4	1-c	D22 c segment output.
	5	1-d	D22 d segment output.
	6	1-e	D22 e segment output.
	7	1-f	D22 f segment output.
	8	1-g	D22 g segment output.
CN13 and CN12 (C/4)	1	C5	D23 common 5V input.
	2	2-a	D23 a segment output.
	3	2-b	D23 b segment output.
	4	2-c	D23 c segment output.
	5	2-d	D23 d segment output.
	6	2-e	D23 e segment output.
	7	2-f	D23 f segment output.
	8	2-g	D23 g segment output.

TERMINAL FUNCTIONS

Connector No.	Terminal No.	Terminal Name	Terminal Function
W1	1	HK	HOOK signal input.
	2	MIC	MIC signal input.
	3	MIG	MIC GND.
	4	PTT	PTT signal input.
	5	SB	Switched B output.
	6	GND	GND.
	7	SCN	Scan signal inut.
	8	DAS	DEL/ADD signal input.
	9	D/A	DEL/ADD LED signal output.
	10	AUX	AUX signal input.
	11	MON	Monitor signal input.
	12	C5	Common 5V output.
W2	1	ENC2	Encoder signal input.
	2	ENC1	Encoder signal input.
	3	+B	Encoder power output.
TX-RX UNIT (X57-3220-10)			
CN1	–	RX	Receive signal input.
CN2	1	PLL CLK	Clock signal input. } For COM PLL IC
	2	PLL DATA	Data signal input. } For COM PLL IC
	3	PLL EN	Enable signal input. } For COM PLL IC
	4	$\overline{\text{AUX}}$	AUX signal input.
	5	$\overline{\text{MON}}$	Monitor signal input.
	6	NC	No connect.
	7	$\overline{\text{T/R}}$	T/R signal input.
	8	S OUT	Serial data out to the Display unit.
	9	S IN	Serial data in from the Display unit.
	10	GND	GND.
	11	$\overline{\text{SB}}$	Switched B output.
	12	$\overline{\text{KEY}}$	KEY signal input.
	13	$\overline{\text{CALL}}$	CALL LED control signal output.
	14	NC	No connect.
	15	$\overline{\text{BUSY}}$	BUSY signal output.
	16	CH CLK	Channel clock for signaling.
	17	CH DATA	Channel data for signaling.
	18	CH EN	Channel enable for signaling.
CN3	1	SER IN	Serial data input for scan.
	2	SER OUT	Serial data output for scan.
	3	ADD/DEL	ADD/DEL signal output from the Display unit.
	4	SCAN SW	Scan switch signal output from the Display unit.
	5	UNL	Common PLL unlock signal output.
	6	DEM	Detected signal output for scan.
	7	GND	GND.
CN4	1	HOOK	HOOK signal input.
	2	MIC GND	MIC GND.
	3	MIC	MIC signal input.
	4	PTT	PTT signal input.
	5	GND	GND.
	6	SB	Switched B output.
	7	S IN	Serial data in from the Display unit.
	8	S OUT	Serial data out to the Display unit.
	9	ADD/DEL	ADD/DEL signal input from the Display unit.
	10	SCAN	Scan switch signal input from the Display unit.
CN5	1	GND	VOL GND.
	2	VOL	Volume control output.
	3	SQ	Squelch control output.
	4	GND	SQ GND.
	5	RLC	Power supply relay control signal output to the power switch.

Connector No.	Terminal No.	Terminal Name	Terminal Function
CN6	1	CH CLK	Channel clock signal output for signaling.
	2	CH DATA	Channel data signal output for signaling.
	3	CH EN	Channel enable signal output for signaling.
CN7	1	SB	Switched B output.
	2	PTT	PTT signal output for signaling.
	3	KEY	KEY signal output for signaling.
	4	ALERT	ALERT signal input for signaling.
	5	RESET	RESET signal output for signaling.
	6	AUX	AUX signal output for signaling.
	7	CALL	CALL signal input for signaling.
	8	AFO	Detected signal input via the Signaling unit.
	9	DET	Detected signal output to the Signaling unit.
	10	AC	Audio mute control signal input by Signaling unit.
	11	GND	GND.
	12	SQL	Noise squelch signal output.
CN8	1	TONE	TONE signal (300Hz or less) input.
	2	MOD	MOD signal (300Hz to 3kHz) input.
	3	MIC MUTE	MIC MUTE signal input.
	4	GND	GND.
CN9	1	HORN1	HORN SW output.
	2	HORN2	HORN SW output.
CN10	1	INT SP	Internal speaker output.
	2	GND	GND.
CN11	1	SB	Switched B output.
	2	MIC	MIC signal input.
	3	MIC GND	MIC GND.
	4	GND	GND.
	5	HOOK	HOOK signal input.
	6	PTT	PTT signal input
	7	SP OUT	External speaker output.
	8	SP IN	Internal speaker input.
	9	HORN1	HORN input terminal.
	10	HORN2	HORN input terminal.
CN12	1	GND	GND.
	2	+B	Power supply output.
	3	+B	Power supply output.
	4	R8	RX 8V output.
	5	T8	TX 8V output.
CN13	–	TX	Transmission drive output.

KMC-9 (BASE MICROPHONE)

EXTERNAL VIEW

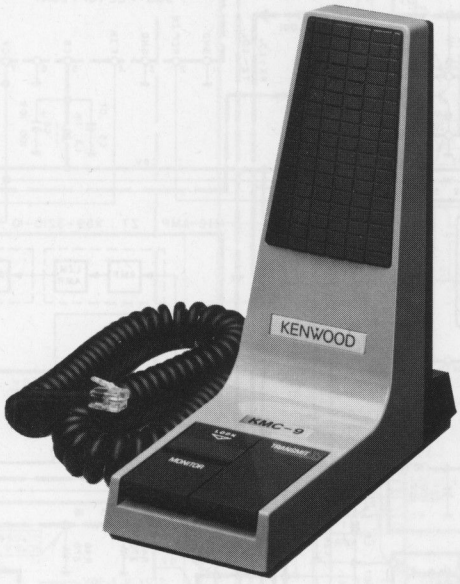

DISASSEMBLY FOR REPAIR

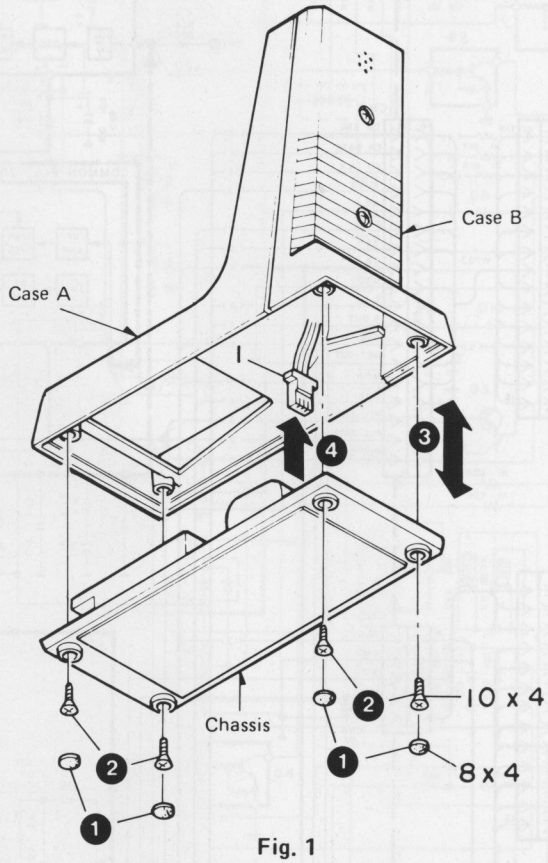

Fig. 1

CHASSIS REMOVAL

1. Remove the four rubber feet (❶).
2. Remove the four screws (❷).
3. Remove the chassis (❸).
4. Disconnect the 3-pin connector from the microphone amplification unit (❹).

REMOVAL OF MICROPHONE ELEMENT AND MICROPHONE AMPLIFICATION UNIT

5. Remove the two screws holding cases A and B (❺).
6. Remove case B (❻).
7. Remove the microphone element and microphone amplification unit (❼).

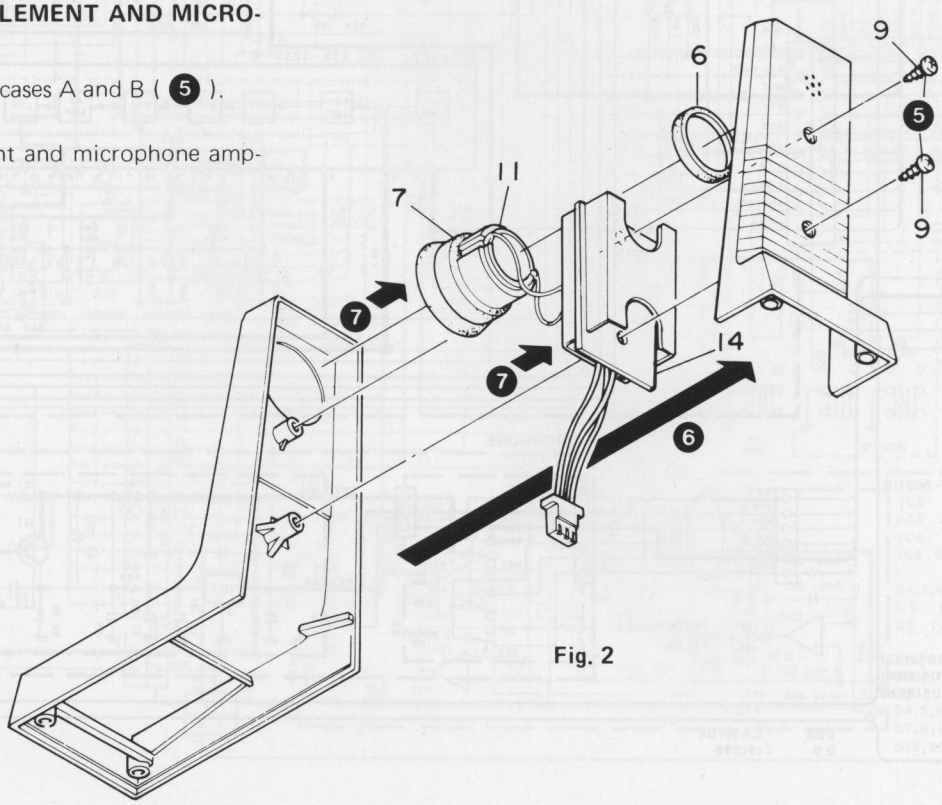

Fig. 2

KMC-9 (BASE MICROPHONE)

SWITCH UNIT REMOVAL

8. Disconnect the 6-pin connector (8).
9. Remove the springs (L and R) (9).
10. Pull out the shaft (10).
11. Remove spring A and slider (11).
12. Remove the switch unit while pressing the two claws holding the switch unit in the direction of the arrow (12).

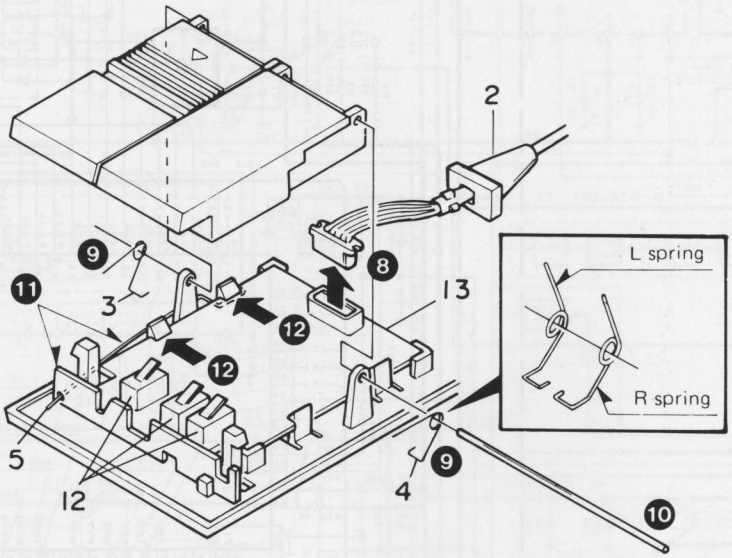

Fig. 3

REMOVING MICROPHONE PLUG

To remove the microphone plug (module) from the Main unit or from the microphone, grasp the rubber cap from up and down with your fingers (to unlock it) and pull it out.

PARTS LIST

*New parts

Ref. No.	New parts	Parts No.	Description
1		E23-0612-08	CRIMP TERMINAL
2		E30-2080-08	CURL CORD
3		G09-0423-08	L SPRING
4		G09-0424-08	R SPRING
5		G09-0425-08	SPRING A
6		G13-0877-08	CUSHION
7		G13-0878-08	CUSHION D.
8		J02-0448-08	RUBBER FOOT
9		N44-3018-45	TAPPING SCREW
10		N47-3010-46	TAPPING SCREW
11		T91-0368-08	MIC UNIT
12		S50-1430-08	MICRO SWITCH
13		W02-0803-08	SW UNIT
14		W02-0395-08	MIC AMP UNIT

KMC-9 (BASE MICROPHONE)

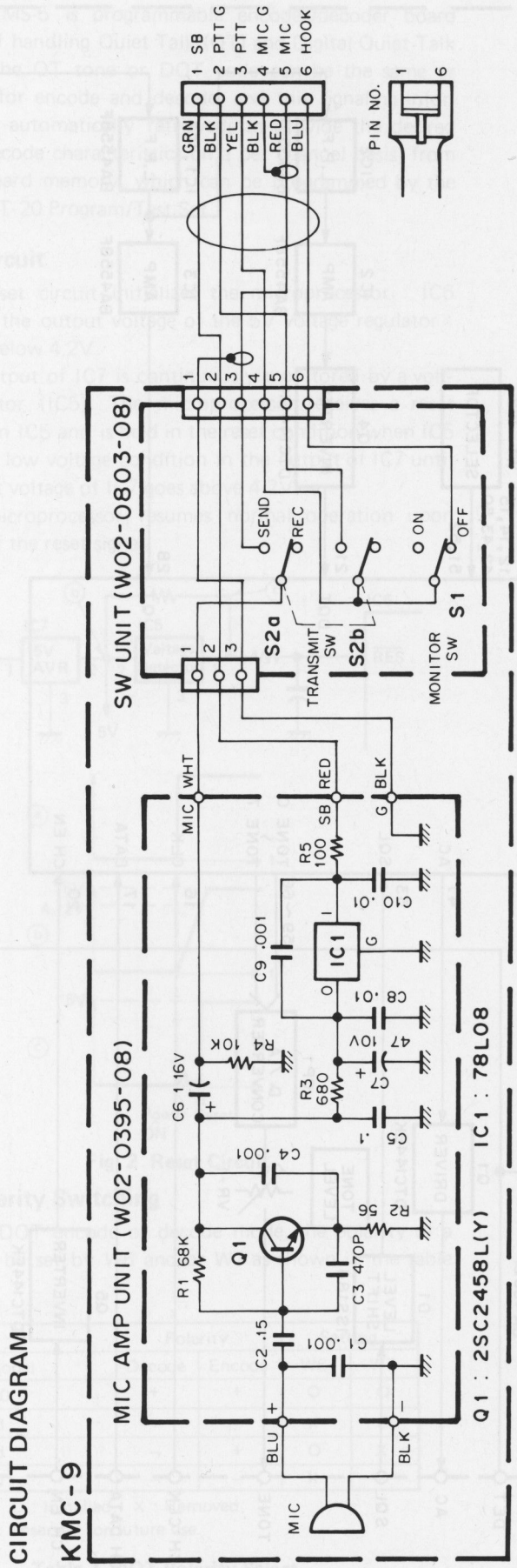

SPECIFICATIONS

SPECIFICATIONS \ MODEL	KMC-9
Type	Uni-directional Dynamic Microphone (Preamplifier built-in)
Output impedance	600Ω±30% (at 1kHz)
Sensitivity	−50dB±3dB (at 1kHz, 0dB=1V/μ bar)
Frequency Characteristic	300~3000Hz (±6dB)
Power Requirements	13.8V DC (supplied from the radio)
Dimensions (W x H x D)	70 x 162 x 150mm (2-3/4 x 6-3/8 x 5-29/32 inch)
Weight	550g (1.2 lbs)

KMS-5 (DQT/QT)

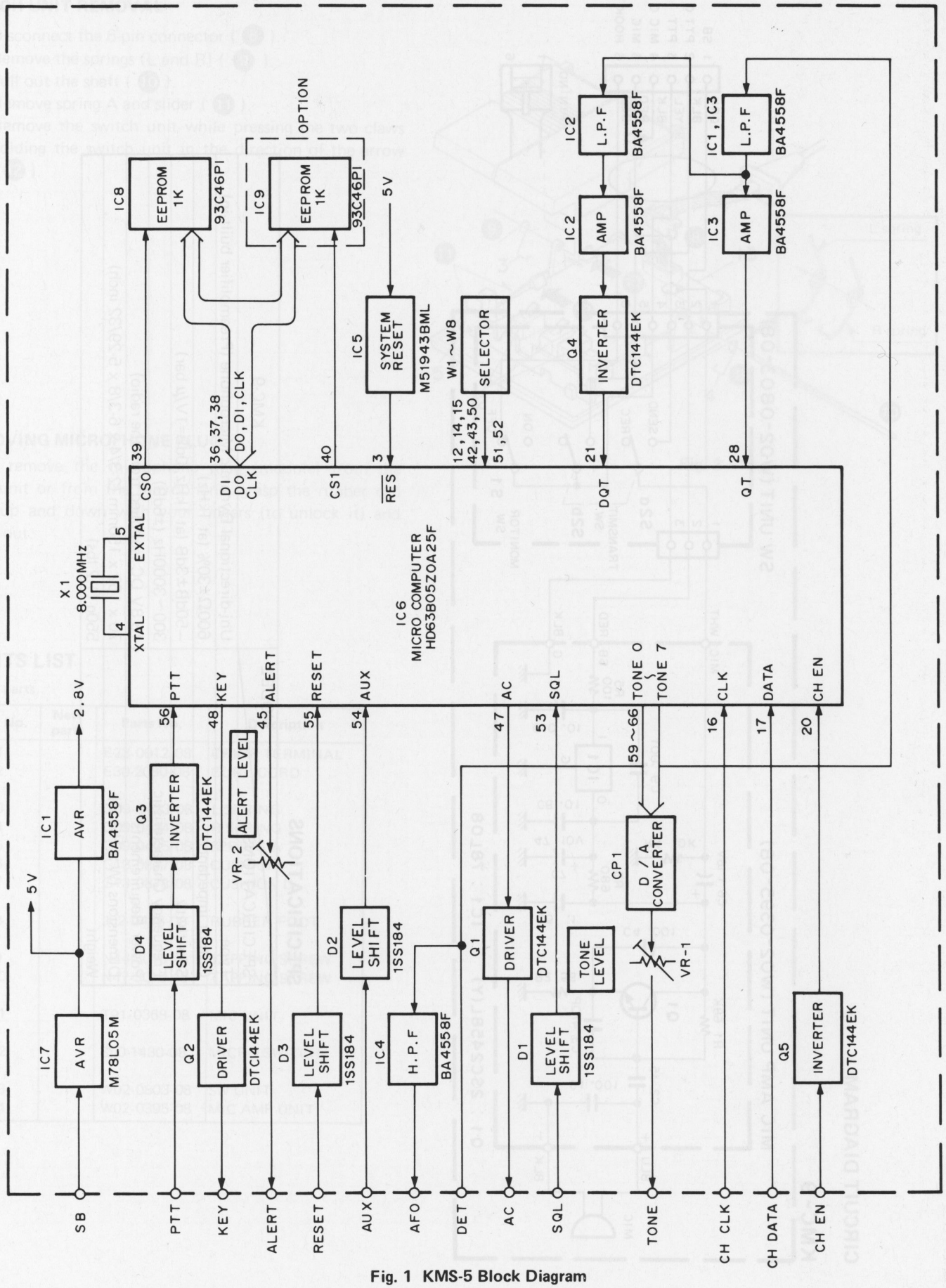

Fig. 1 KMS-5 Block Diagram

KMS-5 (DQT/QT)

The KMS-5 is programmable encoder/decoder board capable of handling Quiet Talk (QT) and Digital Quiet Talk (DQT). The QT tone or DQT code can be the same or different for encode and decode, and this signaling information is automatically retrieved, to provide the desired encode/decode characteristics on a per channel basis, from the on board memory, which can be programmed by the model KPT-20 Program/Test Set.

Reset Circuit

The reset circuit initializes the microprocessor : IC6 whenever the output voltage of the 5V voltage regulator : IC7 falls below 4.2V.

The output of IC7 is continuously monitored by a voltage detector (IC5). The microprocessor receives a reset signal from IC5 and is held in the reset condition when IC5 senses the low voltage condition in the output of IC7 until the output voltage of IC7 goes above 4.2V.

The microprocessor resumes normal operation upon removal of the reset signal.

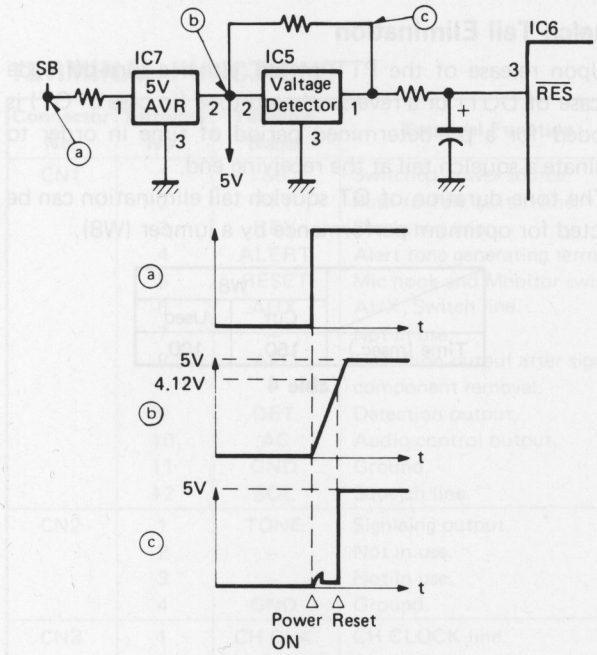

Fig. 2 Reset Circuit

DQT Polarity Switching

In the DQT encode or decode mode, the polarity of a code may be set by W6 and/or W7 as shown in the table below.

	Polarity		Setting	
Model	Decode	Encode	W6	W7
* TKB-720	+	+	O	O
Undefined	+	–	X	O
Undefined	–	+	O	X
Undefined	–	–	X	X

* : BASIC, O : Installed, X : Removed,
Undefined : Reserved for future use.

Table 1 DQT Polarity Select

Retrieval of Stored Data

The channel data (Information of which channel the transceiver is tuned to) is sent from the transceiver control unit, upon reset of the control unit in the transceiver (e.g., initial power on) or whenever a new channel is selected, in a serial format through CHEN (channel enable), DATA and CLK (clock).

The microprocessor in the KMS-5 receives the above serial data and translates it to address locations in EEPROM : IC8 or IC9 (optional) in which encode and decode data are stored. The address information is sent from the microprocessor to the EEPROM in a serial fromat data and, in turn, the EEPROM sends back the stored data to the microprocessor.

If the selected channel is between 1 and 32 then IC8 is selected for the data retrieval, and for channels between 33 and 64, IC9 is selected.

Decoder Operation

The receive audio signal from the transceiver is fed to the KMS-5 through an interface connector CN1. A part of this signal is returned to the receive audio amplifier circuit after going through an active high-pass filter, in which any frequencies below 400Hz are removed. The other part of the audio signal is fed through a fifth-order active low- pass filter, of which the cut-off frequency is set at 200Hz, to discriminate the QT and DQT signals from other audio signals.

The QT tone obtained from the above filtered audio signal is applied to the microprocessor : IC6 as an analog signal for tone detection after being amplified by IC3 (2/2).

The DQT code, on the other hand, is fed through another active low-pass filter IC2 (1/2), of which the cut-off frequency is set at 140Hz, before being applied to IC6 for decoding.

IC6 sends an audio control signal (AC) to the AC terminal of CN1 through an inverter (Q1) according to the status of the incoming signal. If the incoming QT tone or DQT code matches the data stored for the channel, the AC terminal of CN1 is forced to become "LOW" to unmute the receive audio circuit.

Monitor Circuit

The RESET terminal of CN1 is connected to the MONITOR and MIC HOOK circuits in the transceiver.

The RESET terminal signal level goes to "HIGH" state, if either the MONITOR switch is on or the microphone is OFF-HOOK, causing pin 55 (RESET) of IC6 to become "HIGH". In this condition, the AC terminal of CN1 is held "LOW", enabling only the noise actuated squelch operation.

KMS-5 (DQT/QT)

Encoder Operation

In the transmit mode, the PTT terminal of CN1 becomes "LOW" and this information is inverted to "HIGH" by Q3 before being applied to IC6. Upon receipt of this PTT signal, IC6 starts the encode function. The encode signal is sent out from output ports, TONE0 through TONE7, of IC6 in a binary format and is fed to a ladder network resistor : CP1 for Digital-to-Analog signal conversion. The output signal from CP1, which is either the QT tone or the DQT code, is routed to the TONE terminal of CN1 after going through a level control for modulating the transmit signal.

Time-out Timer Operation

The transmitter time-out is determined by a DC level of the T.O.T. terminal at IC6. This level is programmable through jumpers W1, W2 and W3.

The PTT terminal and the KEY terminal of IC6 are at the same level within a time-out period, so that, the KEY terminal output level become "HIGH" when the PTT switch is pressed. This signal is sent to the transceiver through an inverter (Q2) to activate the transmitter with a "LOW" state signal.

Upon time-out, the DC signal level at the KEY terminal of IC6 becomes "LOW" even through the PTT switch is still pressed. This causes the transmitter to be deactivated after the time-out.

The time-out timer is reset every time the PTT switch is released.

Time (s)	W1	W2	W3
∞	O	O	O
30	X	O	O
45	O	X	O
60	X	X	O
90	O	O	X
120	X	O	X
150	O	X	X
180	X	X	X

O : Used, X : Cut.

Table 2

Busy Channel Lockout

This feature reduces possible interference from co-channel users by providing the following functions when the channel is busy.

1) The transmitter is disabled and kept from transmission when the noise squelch is open and the QT tone or DQT code does not match to the one stored in the KMS-5.

2) The transmitter is enabled if the noise squelch is open and the QT tone or the DQT code matches.

If the noise squelch is closed or no information is programmed in, the transmitter is not disabled.

The busy channel lockout is enabled if a jumper, W4 is out.

W4	
Cut	Used
Function operative	Function inoperative

Table 3

Squelch Tail Elimination

Upon release of the PTT switch, either a turn-off code (in case of DQT) or a reverse phased tone (in case of QT) is encoded for a pre-determined period of time in order to eliminate a squelch tail at the receiving end.

The tone duration of QT squelch tail elimination can be selected for optimum performance by a jumper (W8).

	W8	
	Cut	Used
Time (msec.)	150	100

Table 4

KMS-5 (DQT/QT)

DESCRIPTION OF COMPONENTS

SIGNALING UNIT (X52-3120-20)

Component	Part No.	Use/Function	Operation/Condition/Compatibility
IC1	BA4558F	1 : Voltage follower 2 : Low pass filter	
IC2,3	BA4558F	1 : Low pass fliter 2 : Amplifier	
IC4	BA4558F	1 : Low pass filter 2 : Low pass filter	
IC5	M51943BML	CPU system reset	
IC6	HD63B05Z0A25F	CPU (Signaling control)	
IC7	MC78L05M	5V regulator	
IC8	93C46PI	1 ~ 32ch signaling data	
IC9	93C46PI	33 ~ 64ch signaling data	Option part.
Q1	DTC144EK	AC line driver	
Q2	DTC144EK	KEY line driver	
Q3	DTC144EK	PLL line driver	
Q4	DTC144EK	DQT code inverter	
Q5	DTC144EK	CH enable inverter	
D1 ~ 4	1SS184	Level shift	External terminal "L" : ON, "H" : OFF.

TERMINAL FUNCTIONS

Connector No.	Terminal No.	Terminal Name	Terminal Function
CN1	1	SB	Switched power source.
	2	PTT	Push-to-Talk switch line.
	3	KEY	Send start line.
	4	ALERT	Alert tone generating terminal.
	5	RESET	Mic hook and Monitor switch line.
	6	AUX	AUX, Switch line.
	7	–	Not in use.
	8	AFO	Detection output after signaling component removal.
	9	DET	Detection output.
	10	AC	Audio control output.
	11	GND	Ground.
	12	SQL	Squelch line.
CN2	1	TONE	Signlaing output.
	2	–	Not in use.
	3	–	Not in use.
	4	GND	Ground.
CN3	1	CH CLK	CH CLOCK line.
	2	CH DATA	CH DATA line.
	3	CH EN	CH ENABLE line.

KMS-5 (DQT/QT)

⁎ New Parts
Parts without **Parts No.** are not supplied.
Les articles non mentionnes dans le **Parts No.** ne sont pas fournis.
Teile ohne **Parts No.** werden nicht gellefert.

Ref. No. 参照番号	Address 位置	New Parts 新	Parts No. 部品番号	Description 部品名／規格	Destination 仕向	Remarks 備考
				KMS-5		
120			B58-0688-00	CAUTION CARD		
135			B42-3317-04	LABEL		
128			E31-3254-05	CONNECTING WIRE(12P) W1		
129			E31-3255-05	CONNECTING WIRE(4P) W2		
130			E31-3341-05	CONNECTING WIRE(3P) W3		
121			H01-8168-03	ITEM CARTON BOX		
122			H21-0709-04	PROTECTION SHEET		
123			H25-0076-03	PROTECTION BAG (60X50)		
124			H25-0710-04	PROTECTION BAG (100X150)		
127			J42-0452-05	CORD BUSHING		
125			N35-2606-41	BINDING HEAD MACHINE SCREW		
126			X52-3120-20	SIGNALLING UNIT		
				SIGNALING UNIT (X52-3120-20)		
C1			C90-2064-05	ELECTRO 22UF 25WV		
C2			C90-0896-05	ELECTRO 47UF 16WV		
C3 ,4			CK73FB1H103K	CHIP C 0.010UF K		
C5 ,6			CK73FB1H223K	CHIP C 0.022UF K		
C7			C92-0004-05	CHIP TAN 1UF 16WV		
C8 ,9			CK73FB1H103K	CHIP C 0.010UF K		
C10			C92-0004-05	CHIP TAN 1UF 16WV		
C11			CK73FB1H333K	CHIP C 0.033UF K		
C12			CK73FB1H332K	CHIP C 3300PF K		
C13			CK73EB1H683K	CHIP C 0.068UF K		
C14			CK73FB1H152K	CHIP C 1500PF K		
C15			CK73EB1H104K	CHIP C 0.10UF K		
C16			C92-0003-05	CHIP TAN 0.47UF 25WV		
C17			CK73FB1H102K	CHIP C 1000PF K		
C18			CK73EB1E473K	CHIP C 0.047UF K		
C19			CK73EB1E333K	CHIP C 0.033UF K		
C20			C92-0004-05	CHIP TAN 1UF 16WV		
C22			CC73FCH1H101J	CHIP C 100PF J		
C23 ,24			CC73FCH1H220J	CHIP C 22PF J		
C25 ,26			C92-0004-05	CHIP TAN 1UF 16WV		
C27 -32			CK73FB1H103K	CHIP C 0.010UF K		
C33			C90-2063-05	ELECTRO 10UF 25WV		
C34			CK73FB1H103K	CHIP C 0.010UF K		
C35			CK73FB1H183K	CHIP C 0.018UF K		
-			E02-2008-05	IC SOCKET (8P)		
CN1			E40-3256-05	PIN CONNECTOR (12P)		
CN2			E40-3248-05	PIN CONNECTOR (4P)		
CN3			E40-3247-05	PIN CONNECTOR (3P)		
X1			L77-1373-05	CRYSTAL RESONATOR (8.000MHZ)		
CP1			R90-0598-05	MULTI-COMP (10K)		
R1			RD41FB2B100J	CYLND CHIP R 10 J 1/8W		
R2			RD41FB2B103J	CYLND CHIP R 10K J 1/8W		
R3			RD41FB2B223J	CYLND CHIP R 22K J 1/8W		
R4 -15			RD41FB2B473J	CYLND CHIP R 47K J 1/8W		
R16			RD41FB2B123J	CYLND CHIP R 12K J 1/8W		
R17			RD41FB2B153J	CYLND CHIP R 15K J 1/8W		

E: Scandinavia & Europe K: USA P: Canada
U: PX(Far East, Hawaii) T: England M: Other Areas
UE: AAFES(Europe) X: Australia

⚠ indicates safety critical components.

KMS-5 (DQT/QT)

⁎ New Parts
Parts without **Parts No.** are not supplied.
Les articles non mentionnes dans le **Parts No.** ne sont pas fournis.
Teile ohne **Parts No.** werden nicht geliefert.

Ref. No. 参照番号	Address 位置	New Parts 新	Parts No. 部品番号	Description 部品名／規格	Destination 仕向	Remarks 備考
R18 -20			RD41FB2B623J	CYLND CHIP R 62K J 1/8W		
R21			RD41FB2B683J	CYLND CHIP R 68K J 1/8W		
R22			RD41FB2B433J	CYLND CHIP R 43K J 1/8W		
R23 ,24			RD41FB2B103J	CYLND CHIP R 10K J 1/8W		
R25 ,26			RD41FB2B184J	CYLND CHIP R 180K J 1/8W		
R27 -29			RD41FB2B124J	CYLND CHIP R 120K J 1/8W		
R30 ,31			RD41FB2B103J	CYLND CHIP R 10K J 1/8W		
R32			RD41FB2B824J	CYLND CHIP R 820K J 1/8W		
R33 ,34			RD41FB2B473J	CYLND CHIP R 47K J 1/8W		
R35			RD41FB2B104J	CYLND CHIP R 100K J 1/8W		
R36			R92-0687-05	CHIP R 0 OHM		
R37			RD41FB2B473J	CYLND CHIP R 47K J 1/8W		
R38 ,39			RD41FB2B102J	CYLND CHIP R 1.0K J 1/8W		
R40 -45			RD41FB2B473J	CYLND CHIP R 47K J 1/8W		
R46			RD41FB2B102J	CYLND CHIP R 1.0K J 1/8W		
R47			RD41FB2B153J	CYLND CHIP R 15K J 1/8W		
R48			RD41FB2B101J	CYLND CHIP R 100 J 1/8W		
R49			RD41FB2B683J	CYLND CHIP R 68K J 1/8W		
R50			RD41FB2B563J	CYLND CHIP R 56K J 1/8W		
R51			RD41FB2B153J	CYLND CHIP R 15K J 1/8W		
R52			RD41FB2B474J	CYLND CHIP R 470K J 1/8W		
R53			RD41FB2B394J	CYLND CHIP R 390K J 1/8W		
R54			RD41FB2B682J	CYLND CHIP R 6.8K J 1/8W		
VR1 ,2			R12-3099-05	TRIMMING POT. (47K)		
D1 -4			1SS184	CHIP DIODE		
IC1 -4			BA4558F	IC(OP AMP X2)		
IC5			M51943BML	IC(SYSTEM RESET)		
IC6			HD63B05Z0A41FI	IC(MICROPROCESSOR)		
IC7			MC78L05M	IC(VOLTAGE REGULATOR/ +5V)		
IC8			93C46PI	IC(1K EEPROM)		
Q1 -5			DTC144EK	DIGITAL TRANSISTOR		

E: Scandinavia & Europe **K**: USA **P**: Canada
U: PX(Far East, Hawaii) **T**: England **M**: Other Areas
UE: AAFES(Europe) **X**: Australia

⚠ indicates safety critical components.

PACKING

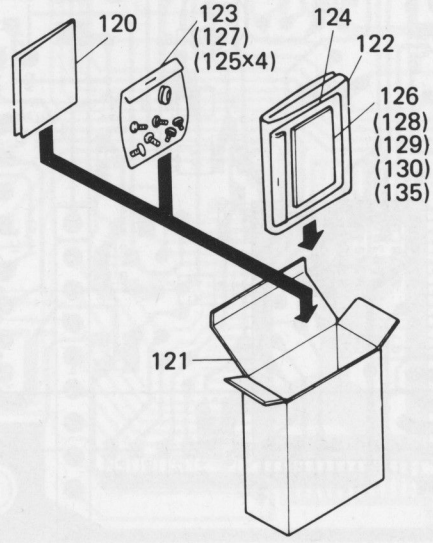

KMS-5 (DQT/QT)

SIGNALING UNIT (X52-3120-20)

Component side view

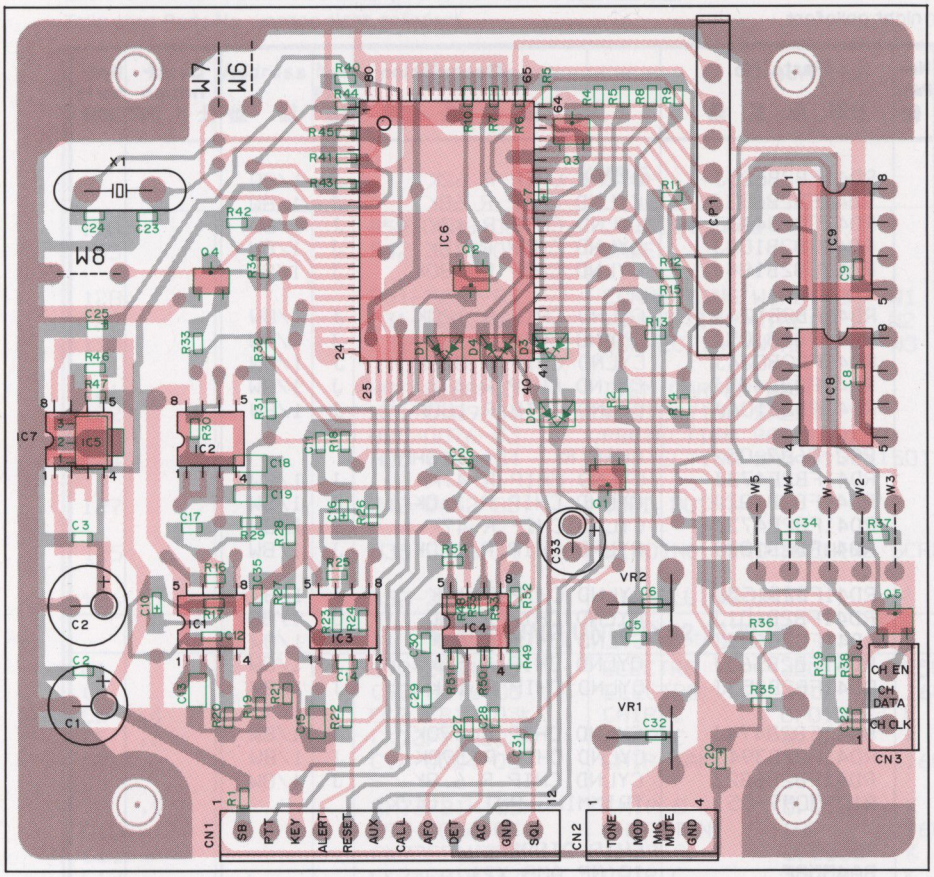

Foil side view

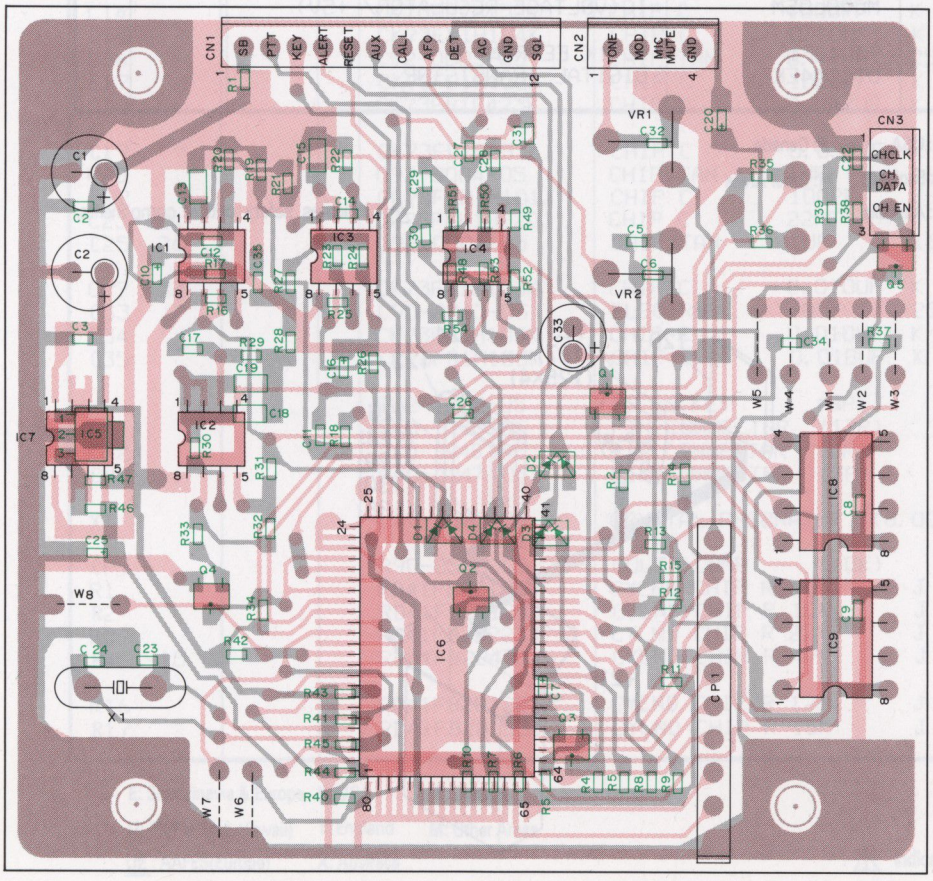

DTC144EK

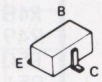

93C46PI

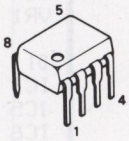

M51943BML

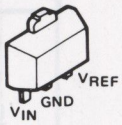

BA4558F
MC78L05M

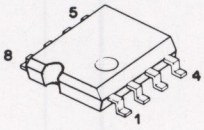

HD63B05Z0A41FI

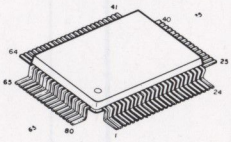

KMS-5 (DQT/QT)

RATINGS

QT Decoder/Encoder	
Decoder/Encoder tone frequency	67.0 to 250.3Hz (in 0.1Hz steps)
Decoder response time : (T1)	T1 = 100/QT tone frequency x 200ms or less
Encoder response time : (T2)	T2 = 100/QT tone frequency x 20ms or less
Squelch tail elimination time : (Tr)	Tr = 100ms or less
Encoder frequency error	±0.5% or less
Squelch sensitivity	SINAD 8dB or less
DQT Decoder/Encoder	
DQT code	23 bits total : a 3-digit octal number (0 ~ 7, 12 bits) with error correction (11 bits.)
Decoder response time : (T3)	T3 = 250ms or less
Encoder response time : (T4)	T4 = 20ms or less
Turn-off code transmission time : (Toff)	Toff = 156ms
Encoder pulse width error	±0.7% or less
Squelch sensitivity	SINAD 8dB or less
Time-out timer	
Time	OFF, 30, 45, 60, 90, 120, 150, 180s (Pre-settable)

KQT-7 (QUIET TALK (CTCSS))

CIRCUIT DESCRIPTION

This unit is the QT : (Quiet Talk) (CTCSS) unit incorporating a QT encoder and decoder.

Decoder Operation

The receiving decoder output (DET signal), which is transmitted from the transceiver, is inputs to the DET pin of this unit. Since the DET signal level is shifted by the ATT unit, the DET signal is input to the RX IN pin of Tone Squelch LSI : IC1 (NJM6520). The DET signal input to IC1 is amplified, passed through LPF1, LIM, BPF, and DET, and then output to DET OUT. The output from the amplifier is also supplied to LPF2 and output to RX OUT via a HPF. The output of RX OUT passes through amplifier : Q2 (2SC2712(GR)) and the AFO pin and is returned to the transceiver.

The DET OUT pin outputs a high level signal when the tone signal input to RX IN matches the tone selected by DIP switch : S1. The low level DET OUT signal passes through diode OR : D2 (1SS184) and Inverter : Q3 (DTC114EK) and is applied to the AC pin to open transceiver squelch. The Reset signal from the transceiver MIC HOOK is applied to diode OR : D2 as well as the DET OUT Signal. Since the reset signal goes high when the transceiver microphone is off hook, the AC pin goes low and monitoring is possible even when no DET OUT signal is present.

The LPF1, BPF, and HPF in IC1 consist of switched capacitor filters and they are controlled by the clock signal. The clock signal is created by dividing the reference signal, from the externally connected crystal oscillator : X1 (4.19430MHz) and the oscillator circuit internal to IC1. The dividing ratio is determined by the tone frequency setting switch : S1, and the selection of the receiving tone frequency is set with switch S1 by varying the center frequency of the BPF (band-pass filter).

Encoder Operation

When a low level PTT signal is input from the transceiver, the signal is applied to Diode : D1 (1SS184) to place IC1 in the transmit mode. The output from D1 is used as a control, so that the operation of TONE MUTE : Q4 (DTC114EK) is interrupted and a TONE signal is output. When IC1 is set to transmit mode, the transmission tone signal is output from the Divider, passed through the LPF1, and applied to the TX OUT pin. The transmission tone signal passes through amplifier : Q1 (2SC2712(GR)), the level of the signal is adjusted by TONE DEV Control : VR1, and is then applied to the transceiver modulator circuit via the TONE pin.

The transmission and reception tone frequency can be selected by Tone Frequency setting switch : S1. The same frequency is used for both transmission and the reception.

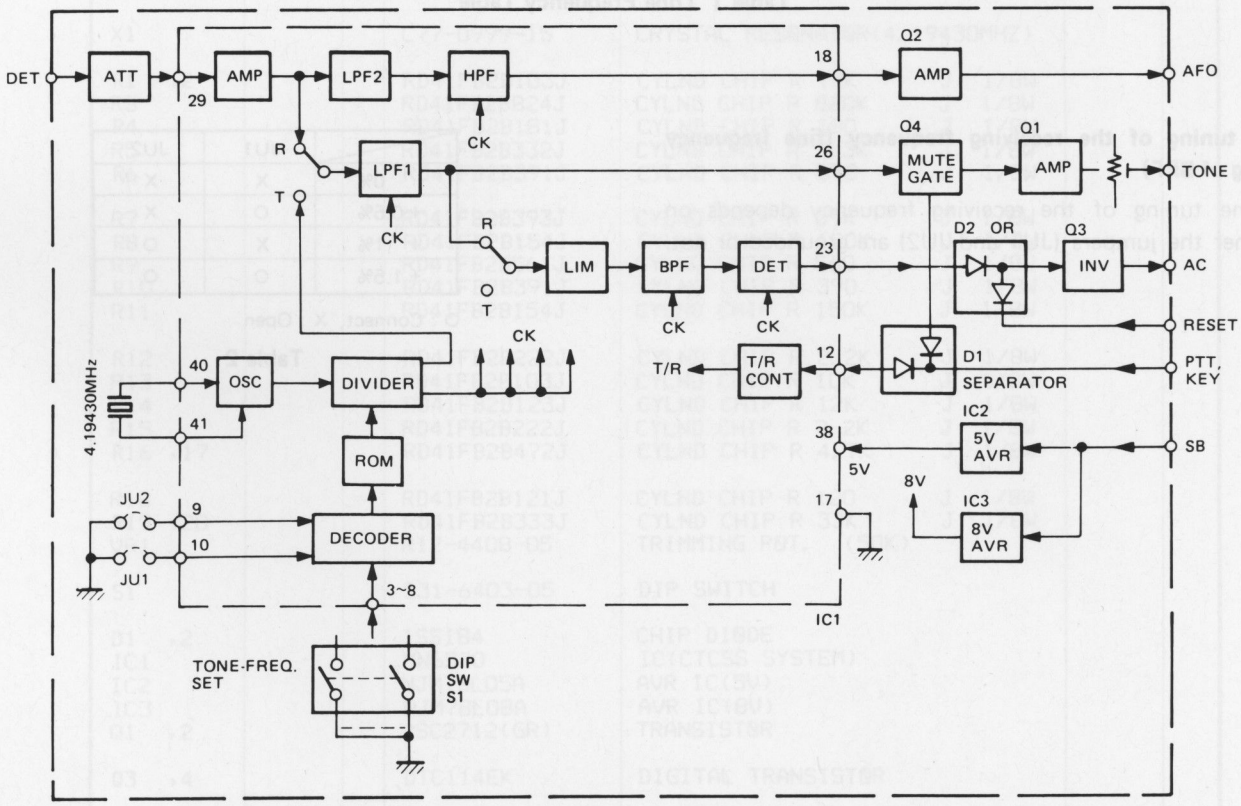

Fig. 1 KQT-7 Block Diagram

KQT-7 (QUIET TALK (CTCSS))

Tone frequency setting

The tone frequency for this unit is set by the dip switch. No. 1 through No. 6 on the dip switch, corresponds to S1 through S6 in the tone frequency table; therefore set the tone frequency according to the **Table 1.**

No.	EIA Specification Group	Hz	Program lines (ON : L, OFF : H) S1 (Dip switch) 1	2	3	4	5	6	No.	EIA Specification Group	Hz	Program lines (ON : L, OFF : H) S1 (Dip switch) 1	2	3	4	5	6
1	A	67.0	OFF	ON	OFF	OFF	OFF	ON	20	B	136.5	OFF	OFF	OFF	OFF	ON	OFF
2	B	71.9	ON	ON	OFF	OFF	OFF	ON	21	A	141.3	ON	OFF	OFF	OFF	ON	OFF
3	C	74.4	OFF	OFF	ON	OFF	OFF	ON	22	B	146.2	OFF	ON	OFF	OFF	ON	OFF
4	A	77.0	ON	OFF	ON	OFF	OFF	ON	23	A	151.4	ON	ON	OFF	OFF	ON	OFF
5	C	79.7	OFF	ON	ON	OFF	OFF	ON	24	B	156.7	OFF	OFF	ON	OFF	ON	OFF
6	B	82.5	ON	ON	ON	OFF	OFF	ON	25	A	162.2	ON	OFF	ON	OFF	ON	OFF
7	C	85.4	OFF	OFF	OFF	ON	OFF	ON	26	B	167.9	OFF	ON	ON	OFF	ON	OFF
8	A	88.5	ON	OFF	OFF	ON	OFF	ON	27	A	173.8	ON	ON	ON	OFF	ON	OFF
9	C	91.5	OFF	ON	OFF	ON	OFF	ON	28	B	179.9	OFF	OFF	OFF	ON	ON	OFF
10	B	94.8	OFF	ON	ON	OFF	OFF	OFF	29	A	186.2	ON	OFF	OFF	ON	ON	OFF
11	A	100.0	ON	ON	ON	OFF	OFF	OFF	30	B	192.8	OFF	ON	OFF	ON	ON	OFF
12	B	103.5	OFF	OFF	OFF	ON	OFF	OFF	31	A	203.5	ON	ON	OFF	ON	ON	OFF
13	A	107.2	ON	OFF	OFF	ON	OFF	OFF	32	B	210.7	OFF	OFF	ON	ON	ON	OFF
14	B	110.9	OFF	ON	OFF	ON	OFF	OFF	33	A	218.1	ON	OFF	ON	ON	ON	OFF
15	A	114.8	ON	ON	OFF	ON	OFF	OFF	34	B	225.7	OFF	ON	ON	ON	ON	OFF
16	B	118.8	OFF	OFF	ON	ON	OFF	OFF	35	A	233.6	ON	ON	ON	ON	ON	OFF
17	A	123.0	ON	OFF	ON	ON	OFF	OFF	36	B	241.8	OFF	OFF	OFF	OFF	OFF	ON
18	B	127.3	OFF	ON	ON	ON	OFF	OFF	37	A	250.3	ON	OFF	OFF	OFF	OFF	ON
19	A	131.8	ON	ON	ON	ON	OFF	OFF									

Table 1 Tone Frequency Table

Fine tuning of the receiving frequency (fine frequency tuning of BPF)

Fine tuning of the receiving frequency depends on whether the jumpers (JU1 and JU2) are grounded or not.

	JU1	JU2
0%	X	X
+ 0.5%	O	X
+ 1%	X	O
+ 1.5%	O	O

O : Connect, X : Open

Table 2

KQT-7 (QUIET TALK (CTCSS))

* New Parts
Parts without **Parts No.** are not supplied.
Les articles non mentionnes dans le **Parts No.** ne sont pas fournis.
Telle ohne **Parts No.** werden nicht geliefert.

Ref. No. 参照番号	Address 位置	New Parts 新	Parts No. 部品番号	Description 部品名／規格	Destination 仕向	Remarks 備考
				KQT-7		
120			B58-0684-00	CAUTION CARD		
128			E31-3254-05	CONNECTING WIRE(12P)		
129			E31-3255-05	CONNECTING WIRE(4P)		
121			H01-8117-03	CARTON (INSIDE)		
122			H21-0709-04	PROTECTION SHEET		
123			H25-0076-03	PROTECTION BAG (60X50)		
124			H25-0710-04	CONDUCTIVE BAG (100X150)		
125			N35-2606-41	BINDING HEAD MACHINE SCREW		
126			X52-3080-20	CTCSS UNIT		
127			J42-0452-05	POWER CORD BUSHING		
				QT UNIT (X52-3080-20)		
C1 ,2			CC73FCH1H150J	CHIP C 15PF J		
C3			C90-2050-05	ELECTRO 33UF 6.3WV		
C4 ,5			C90-2077-05	ELECTRO 0.1UF 25WV		
C6 ,7			C90-2044-05	ELECTRO 1UF 25WV		
C8			C90-2021-05	ELECTRO 10UF 25WV		
C9 ,10			C90-2044-05	ELECTRO 1UF 25WV		
C11			C90-2021-05	ELECTRO 10UF 25WV		
C12			C90-0482-05	ELECTRO 4.7UF 25WV		
C13			CK73FB1H103K	CHIP C 0.010UF K		
C14 -17			C90-0501-05	ELECTRO 33UF 25WV		
CN1			E40-5077-05	PIN CONNECTOR (12P)		
CN2			E40-5075-05	PIN CONNECTOR (4P)		
X1			L77-0999-15	CRYSTAL RESONATOR(4.19430MHZ)		
R1 ,2			RD41FB2B103J	CYLND CHIP R 10K J 1/8W		
R3			RD41FB2B824J	CYLND CHIP R 820K J 1/8W		
R4			RD41FB2B181J	CYLND CHIP R 180 J 1/8W		
R5			RD41FB2B332J	CYLND CHIP R 3.3K J 1/8W		
R6			RD41FB2B391J	CYLND CHIP R 390 J 1/8W		
R7			RD41FB2B393J	CYLND CHIP R 39K J 1/8W		
R8			RD41FB2B154J	CYLND CHIP R 150K J 1/8W		
R9			RD41FB2B561J	CYLND CHIP R 560 J 1/8W		
R10			RD41FB2B391J	CYLND CHIP R 390 J 1/8W		
R11			RD41FB2B154J	CYLND CHIP R 150K J 1/8W		
R12			RD41FB2B222J	CYLND CHIP R 2.2K J 1/8W		
R13			RD41FB2B103J	CYLND CHIP R 10K J 1/8W		
R14			RD41FB2B123J	CYLND CHIP R 12K J 1/8W		
R15			RD41FB2B222J	CYLND CHIP R 2.2K J 1/8W		
R16 ,17			RD41FB2B472J	CYLND CHIP R 4.7K J 1/8W		
R18			RD41FB2B121J	CYLND CHIP R 120 J 1/8W		
R19 ,20			RD41FB2B333J	CYLND CHIP R 33K J 1/8W		
VR1			R12-4408-05	TRIMMING POT. (50K)		
S1			S31-6403-05	DIP SWITCH		
D1 ,2			1SS184	CHIP DIODE		
IC1			MN6520	IC(CTCSS SYSTEM)		
IC2			NJM78L05A	AVR IC(5V)		
IC3			NJM78L08A	AVR IC(8V)		
Q1 ,2			2SC2712(GR)	TRANSISTOR		
Q3 ,4			DTC114EK	DIGITAL TRANSISTOR		

E: Scandinavia & Europe K: USA P: Canada
U: PX(Far East, Hawaii) T: England M: Other Areas
UE: AAFES(Europe) X: Australia

⚠ indicates safety critical components.

KQT-7 (QUIET TALK (CTCSS))

PACKING

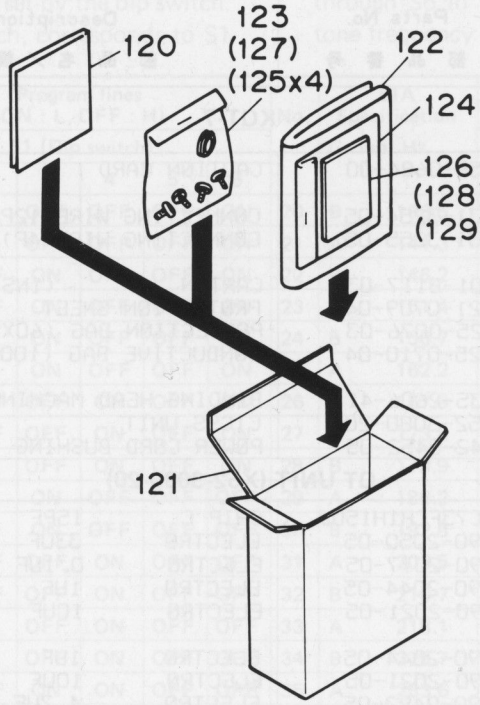

RATINGS

QT	
Encoder/Decoder tone frequency	67.0 to 250.3Hz EIA STD (RS-220A) tone frequencies
Decoder response time: (T1)	T1 = 100/QT tone frequency x 250ms or less
Encoder response time: (T2)	T2 = 100/QT tone frequency x 75ms or less
Encoder frequency error	±0.5% or less
Squelch sensitivity	SINAD 10dB or less

KSK-2 (SCAN & DQT/QT)

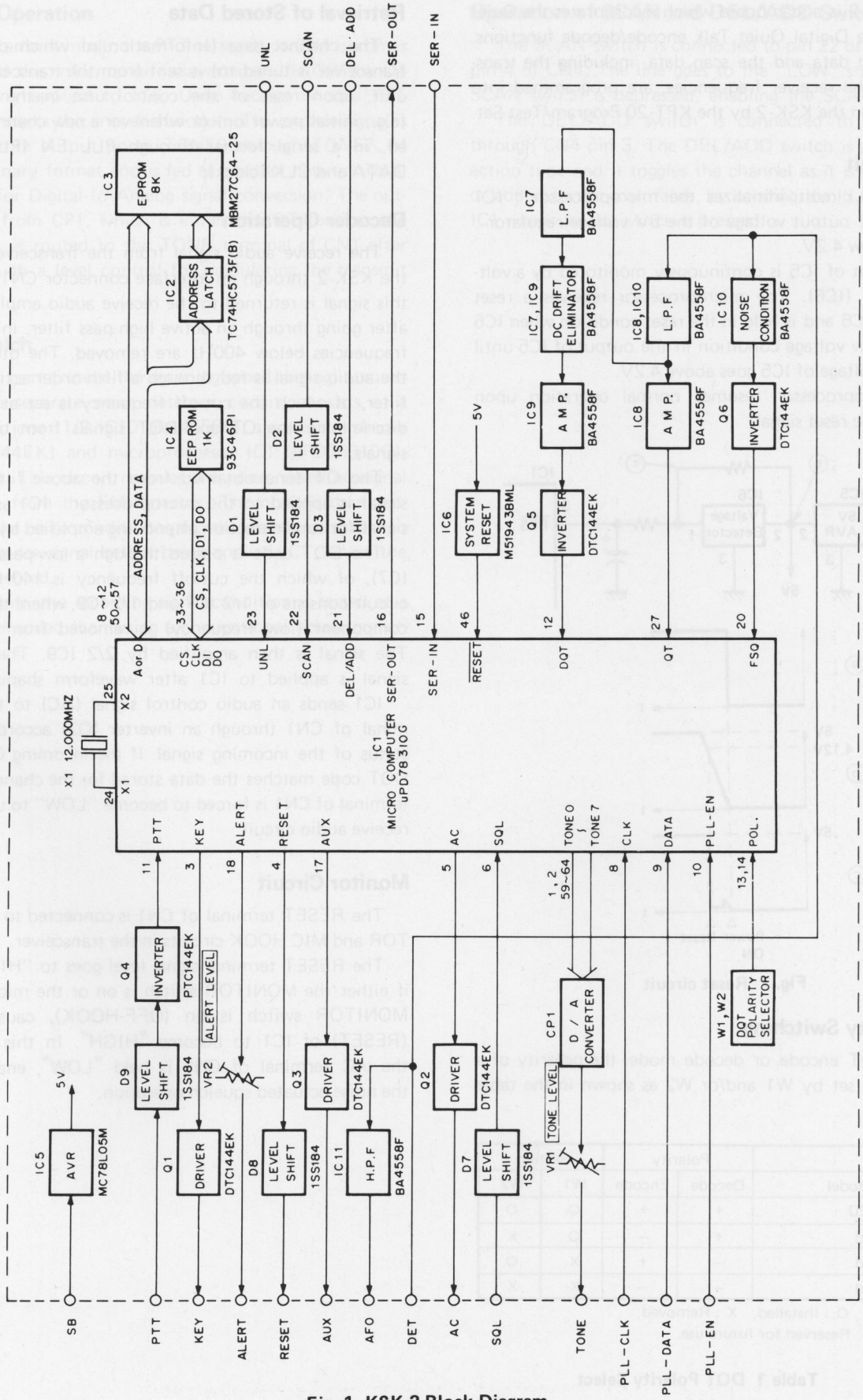

Fig. 1 KSK-2 Block Diagram

KSK-2 (SCAN & DQT/QT)

The KSK-2 is a scan board which incorporates the Quiet Talk and the Digital Quiet Talk encode/decode functions. The signaling data and the scan data, including the transmitter and the receiver frequencies, are programmed into an EPROM on the KSK-2 by the KPT-20 Program/Test Set.

Reset Circuit

The reset circuit initializes the microprocessor : IC1 whenever the output voltage of the 5V voltage regulator : IC5 falls below 4.2V.

The output of IC5 is continuously monitored by a voltage detector (IC6). The microprocessor receives a reset signal from IC6 and is held in the reset condition when IC6 senses the low voltage condition in the output of IC5 until the output voltage of IC5 goes above 4.2V.

The microprocessor resumes normal operation upon removal of the reset signal.

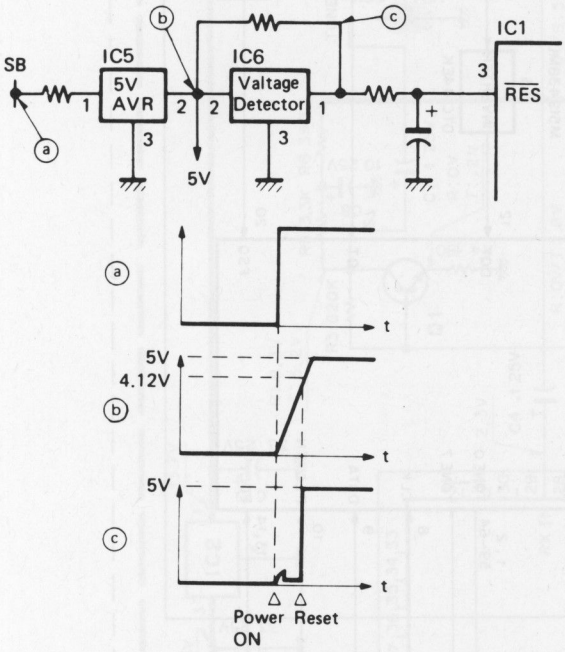

Fig. 2 Reset circuit

DQT Polarity Switching

In the DQT encode or decode mode, the polarity of a code may be set by W1 and/or W2 as shown in the table below.

	Polarity		Setting	
Model	Decode	Encode	W1	W2
* TKB-720	+	+	O	O
Undefined	+	–	O	X
Undefined	–	+	X	O
Undefined	–	–	X	X

* : BASIC, O : Installed, X : Removed,
Undefined : Reserved for future use.

Table 1 DQT Polarity Select

Retrieval of Stored Data

The channel data (Information of which channel the transceiver is tuned to) is sent from the transceiver control unit, upon reset of the control unit in the transceiver (e.g., initial power on) or whenever a new channel is selected, in a serial format through PLL EN (PLL enable), DATA and CLK (clock).

Decoder Operation

The receive audio signal from the transceiver is fed to the KSK-2 through an interface connector CN1. A part of this signal is returned to the receive audio amplifier circuit after going through an active high-pass filter, in which any frequencies below 400Hz are removed. The other part of the audio signal is fed through a fifth-order active low-pass filter, of which the cut-off frequency is set at 200Hz, to discriminate the QT and DQT signals from other audio signals.

The QT tone obtained from the above filtered audio signal is applied to the microprocessor : IC1 as an analog signal for tone detection after being amplified by IC8 (2/2).

The DQT code is passed through a low-pass filter (2/2 IC7), of which the cut-off frequency is 140Hz, and the circuit consists of 1/2 IC7 and 1/2 IC9, where the DC drift component (low frequency) is removed from the signal. The signal is then amplified by 2/2 IC9. The amplified signal is applied to IC1 after waveform shaping by Q5.

IC1 sends an audio control signal (AC) to the AC terminal of CN1 through an inverter (Q2) according to the status of the incoming signal. If the incoming QT tone or DQT code matches the data stored for the channel, the AC terminal of CN1 is forced to become "LOW" to unmute the receive audio circuit.

Monitor Circuit

The RESET terminal of CN1 is connected to the MONITOR and MIC HOOK circuits in the transceiver.

The RESET terminal signal level goes to "HIGH" state, if either the MONITOR switch is on or the microphone is MONITOR switch is on (OFF-HOOK), causing pin 4 (RESET) of IC1 to become "HIGH". In this condition, the AC terminal of CN1 is held "LOW", enabling only the noise actuated squelch operation.

KSK-2 (SCAN & DQT/QT)

Encoder Operation

In the transmit mode, the PTT terminal of CN1 becomes "LOW" and this information is inverted to "HIGH" by Q4 before being applied to IC6. Upon receipt of this PTT signal, IC6 starts the encode function. The encode signal is sent out from output ports, TONE0 through TONE7, of IC6 in a binary format and is fed to a ladder network resistor : CP1 for Digital-to-Analog signal conversion. The output signal from CP1, which is either the QT tone or the DQT code, is routed to the TONE terminal of CN1 after going through a level control for modulating the transmit signal.

Fast Squelch

In order to maximize the scanning speed through unused channels, a separate noise detector circuit, consists of a noise conditioner 1/2 IC10 (BA4558F), a waveform shaper Q6 (DTC144EK) and microprocessor IC1 (μPD78310G), is provided. This circuit receives the noise, when no signal is received, from the FM detector. The noise is then processed by the noise conditioner and the waveform shaper to become a pulse signal before being applied IC1, where the signal is detected.

As a result, the incoming signal condition is tested at a much faster speed than using a conventional noise squelch signal.

Operation of SCAN and DEL/ADD Switches

The SCAN switch is connected to pin 22 of IC1 through pin 4 of CN4. The line goes to the "LOW" state when the SCAN switch is depressed, enabling the SCAN operation.

The DEL/ADD switch is connected to IC1 pin 21 through CN4 pin 3. The DEL/ADD switch is a momentary action type and it toggles the channel as it is deleted from or added to the scan table, by sending the "LOW" state to IC1 whenever the switch is pressed.

KSK-2 (SCAN & DQT/QT)

DESCRIPTION OF COMPONENTS

CONTROL UNIT (X53-3140-20)

Component	Part No.	Use/Function	Operation/Condition/Compatibility
IC1	μPD78310G	Controller (CPU)	
IC2	TC74HC573F(B)	Address latch	
IC3	MBM27C64-25JAM1	EPROM	
IC4	93C46PI	EEPROM	
IC5	MC78L05M	5V regulator	
IC6	M51943BML	CPU system reset	
IC7, 8	BA4558F	Low pass filter	
IC9	BA4558F	Low pass filter & Amplifier	
IC10	BA4558F	Low pass filter & Noise conditioner	
IC11	BA4558F	High pass filter	
Q1	DTC144EK	KEY line driver	
Q2	DTC144EK	AC line driver	
Q3	DTC144EK	AUX line driver	
Q4	DTC144EK	PTT line inverter	
Q5	DTC144EK	DPL code inverter	
Q6	DTC144EK	Noise condition inverter	
D1 ~ D5	1SS184	Level shift	External terminal "L" : ON, "H" : OFF
D6	1SS226	Detector	
D7 ~ D10	1SS184	Level shift	External terminal "L" : ON, "H" : OFF.

TERMINAL FUNCTIONS

Connector No.	Terminal No.	Terminal Name	Terminal Function
CN1	1	SB	Switched power source.
	2	PTT	Push-to-Talk switch line.
	3	KEY	Send start line.
	4	ALERT	Alert tone generating terminal.
	5	RESET	Mic hook and Monitor switch line.
	6	AUX	AUX switch line.
	7	–	Not in use.
	8	AFO	Detection output after signaling component removal.
	9	DTE	Detection output.
	10	AC	Audio control output.
	11	GND	Ground.
	12	SQL	Squelch line.
CN2	1	TONE	Signaling output.
	2	–	Not in use.
	3	–	Not in use.
	4	GND	Ground.
CN3	1	PLL CLK	PLL CLOCK line.
	2	PLL DATA	PLL DATA line.
	3	PLL EN	PLL ENABLE line.
CN4	1	SER-IN	Serial data input (from display μ-com.).
	2	SER-OUT	Serial data output (to dispaly μ-com.).
	3	DEL/ADD	DEL/ADD switch line.
	4	SCAN	SCAN switch line.
	5	UNL	PLL unlock line.
	6	–	Not in use.
	7	–	Not in use.

KSK-2 (SCAN & DQT/QT)

* New Parts
Parts without **Parts No.** are not supplied.
Les articles non mentionnes dans le **Parts No.** ne sont pas fournis.
Telle ohne **Parts No.** werden nicht geliefert.

Ref. No. 参照番号	Address 位置	New Parts 新	Parts No. 部品番号	Description 部品名／規格	Destination 仕向	Remarks 備考
			KSK-2			
1			B03-0548-03	DRESSING PLATE (SCAN)		
2			B42-3317-04	SERIAL NUMBER PLATE		
3			B58-0689-00	CAUTION CARD		
D4			B30-0860-05	LED (ORANGE) SCAN		
D5			B30-0856-05	LED (GREEN) DEL/ADD		
6			E31-3342-05	CONNECTING WIRE		
W101			E31-3254-05	CONNECTING WIRE(12P)		
W102			E31-3255-05	CONNECTING WIRE(4P)		
W103			E31-3341-05	CONNECTING WIRE(3P)		
W104			E31-3340-05	CONNECTING WIRE(7P)		
11			G13-0829-04	CUSHION (ROM)		
12			G13-0886-04	CUSHION (FRAME)		
13			G53-0535-04	PACKING (SW)		
15			H01-8169-03	ITEM CARTON BOX		
16			H21-0709-04	PROTECTION SHEET		
17			H25-0029-04	PROTECTION BAG (60X110)		
18			H25-0076-03	PROTECTION BAG (60X50)		
19			H25-0096-04	PROTECTION BAG (80X120)		
20			H25-0710-04	PROTECTION BAG (100X150) BLUE		
22			J42-0452-05	BUSHING		
24			K27-0498-04	PUSH KNOB (DEL/ADD,SCAN)		
26			N35-2606-41	BINDING HEAD MACHINE SCREW		
28			S40-2455-05	PUSH SWITCH (LOCK)		
29			S40-2456-05	PUSH SWITCH (NON LOCK)		
31			X53-3140-20	CONTROL UNIT		
IC3			27C64-25JAM4	IC(EPROM)		
			CONTROL UNIT (X53-3140-20)			
C1			C90-2064-05	ELECTRO 22UF 25WV		
C2 ,3			CK73FB1H103K	CHIP C 0.010UF K		
C4			C90-0896-05	ELECTRO 47UF 16WV		
C5			C92-0004-05	CHIP TAN 1UF 16WV		
C6 -8			CK73FB1H103K	CHIP C 0.010UF K		
C9			CC73FCH1H470J	CHIP C 47PF J		
C10			C92-0009-05	CHIP TAN 4.7UF 10WV		
C11			CK73FB1H333K	CHIP C 0.033UF K		
C12			CK73EB1H683K	CHIP C 0.068UF K		
C13			CK73FB1H332K	CHIP C 3300PF K		
C14			CK73FB1H152K	CHIP C 1500PF K		
C15			CK73EB1H104K	CHIP C 0.10UF K		
C16			C92-0011-05	CHIP TAN 10UF 4WV		
C17			C92-0003-05	CHIP TAN 0.47UF 25WV		
C18 ,19			CC73FCH1H100D	CHIP C 10PF D		
C20			CK73FB1H183K	CHIP C 0.018UF K		
C21			CK73FB1H102K	CHIP C 1000PF K		
C22			CK73EB1E333K	CHIP C 0.033UF K		
C23			CK73EB1E473K	CHIP C 0.047UF K		
C24 ,25			C92-0004-05	CHIP TAN 1UF 16WV		
C26 -28			CC73FCH1H101J	CHIP C 100PF J		
C29 ,30			CK73FB1H103K	CHIP C 0.010UF K		

E: Scandinavia & Europe K: USA P: Canada
U: PX(Far East, Hawaii) T: England M: Other Areas
UE: AAFES(Europe) X: Australia

⚠ indicates safety critical components.

KSK-2 (SCAN & DQT/QT)

* New Parts
Parts without **Parts No.** are not supplied.
Les articles non mentionnes dans le **Parts No.** ne sont pas fournis.
Teile ohne **Parts No.** werden nicht gellefert.

Ref. No. 参照番号	Address 位置	New Parts 新	Parts No. 部品番号	Description 部品名／規格	Destination 仕向	Remarks 備考
C31			CK73FB1H223K	CHIP C 0.022UF K		
C32			C90-2070-05	ELECTRO 10UF 50WV		
C33			CK73FB1H223K	CHIP C 0.022UF K		
C34			C92-0004-05	CHIP TAN 1UF 16WV		
C35 -39			CK73FB1H103K	CHIP C 0.010UF K		
C40			C92-0004-05	CHIP TAN 1UF 16WV		
			E02-2001-05	IC SOCKET (28P)		
CN1			E40-3256-05	PIN CONNECTOR (12P)		
CN2			E40-3248-05	PIN CONNECTOR (4P)		
CN3			E40-3247-05	PIN CONNECTOR (3P)		
CN4			E40-3251-05	PIN CONNECTOR (7P)		
X1			L77-1374-05	CRYSTAL RESONATOR(12.000MHZ)		
CP1			R90-0598-05	MULTI-COMP (10P)		
R1			RD41FB2B100J	CYLND CHIP R 10 J 1/8W		
R2			RD41FB2B153J	CYLND CHIP R 15K J 1/8W		
R3			RD41FB2B102J	CYLND CHIP R 1.0K J 1/8W		
R4 -8			RD41FB2B473J	CYLND CHIP R 47K J 1/8W		
R9 ,10			RD41FB2B273J	CYLND CHIP R 27K J 1/8W		
R11			RD41FB2B684J	CYLND CHIP R 680K J 1/8W		
R12			RD41FB2B104J	CYLND CHIP R 100K J 1/8W		
R13			R92-0687-05	CHIP R 0 OHM		
R14 -16			RD41FB2B623J	CYLND CHIP R 62K J 1/8W		
R17			RD41FB2B683J	CYLND CHIP R 68K J 1/8W		
R18			RD41FB2B433J	CYLND CHIP R 43K J 1/8W		
R19			RD41FB2B123J	CYLND CHIP R 12K J 1/8W		
R20			RD41FB2B153J	CYLND CHIP R 15K J 1/8W		
R21 ,22			RD41FB2B473J	CYLND CHIP R 47K J 1/8W		
R23			RD41FB2B184J	CYLND CHIP R 180K J 1/8W		
R24 ,25			RD41FB2B103J	CYLND CHIP R 10K J 1/8W		
R26			RD41FB2B184J	CYLND CHIP R 180K J 1/8W		
R27 ,28			RD41FB2B102J	CYLND CHIP R 1.0K J 1/8W		
R29 ,30			RD41FB2B473J	CYLND CHIP R 47K J 1/8W		
R31 ,32			RD41FB2B223J	CYLND CHIP R 22K J 1/8W		
R33			RD41FB2B473J	CYLND CHIP R 47K J 1/8W		
R34 ,35			RD41FB2B102J	CYLND CHIP R 1.0K J 1/8W		
R36 ,37			RD41FB2B473J	CYLND CHIP R 47K J 1/8W		
R38 -40			RD41FB2B124J	CYLND CHIP R 120K J 1/8W		
R41			RD41FB2B183J	CYLND CHIP R 18K J 1/8W		
R42			RD41FB2B471J	CYLND CHIP R 470 J 1/8W		
R43 ,44			RD41FB2B393J	CYLND CHIP R 39K J 1/8W		
R45			RK73FB2A225J	CHIP R 2.2M J 1/10W		
R46 -52			RD41FB2B473J	CYLND CHIP R 47K J 1/8W		
R53 -55			RD41FB2B102J	CYLND CHIP R 1.0K J 1/8W		
R56			RD41FB2B473J	CYLND CHIP R 47K J 1/8W		
R57			RD41FB2B103J	CYLND CHIP R 10K J 1/8W		
R58 -60			RD41FB2B473J	CYLND CHIP R 47K J 1/8W		
R61			RD41FB2B223J	CYLND CHIP R 22K J 1/8W		
R62			RD41FB2B683J	CYLND CHIP R 68K J 1/8W		
R63			RD41FB2B563J	CYLND CHIP R 56K J 1/8W		
R64			RD41FB2B153J	CYLND CHIP R 15K J 1/8W		
R65			RD41FB2B474J	CYLND CHIP R 470K J 1/8W		
R66			RD41FB2B394J	CYLND CHIP R 390K J 1/8W		
R67			RD41FB2B682J	CYLND CHIP R 6.8K J 1/8W		

E: Scandinavia & Europe K: USA P: Canada
U: PX(Far East, Hawaii) T: England M: Other Areas
UE: AAFES(Europe) X: Australia

⚠ indicates safety critical components.

KSK-2 (SCAN & DQT/QT)

⁎ New Parts
Parts without **Parts No.** are not supplied.
Les articles non mentionnes dans le **Parts No.** ne sont pas fournis.
Teile ohne **Parts No.** werden nicht geliefert.

Ref. No. 参照番号	Address 位置	New Parts 新	Parts No. 部品番号	Description 部品名／規格	Destination 仕向	Remarks 備考
R68			RD41FB2B101J	CYLND CHIP R 100 J 1/8W		
R69			RD41FB2B473J	CYLND CHIP R 47K J 1/8W		
VR1 ,2			R12-3099-05	TRIMMING POT. (47K)		
D1 -5			1SS184	CHIP DIODE		
D6			1SS226	CHIP DIODE		
D7 -9			1SS184	CHIP DIODE		
IC1			UPD78310G	IC(MICROPROCESSOR)		
IC2			TC74HC573F	IC(8-BIT LATCH)		
IC4			93C46PI	IC(1K EEPROM)		
IC5			MC78L05M	IC(VOLTAGE REGULATOR/ +5V)		
IC6			M51943BML	IC(SYSTEM RESET)		
IC7 -11			BA4558F	IC(OP AMP X2)		
Q1 -6			DTC144EK	DIGITAL TRANSISTOR		

E: Scandinavia & Europe K: USA P: Canada
U: PX(Far East, Hawaii) T: England M: Other Areas
UE : AAFES(Europe) X: Australia

⚠ indicates safety critical components.

PACKING

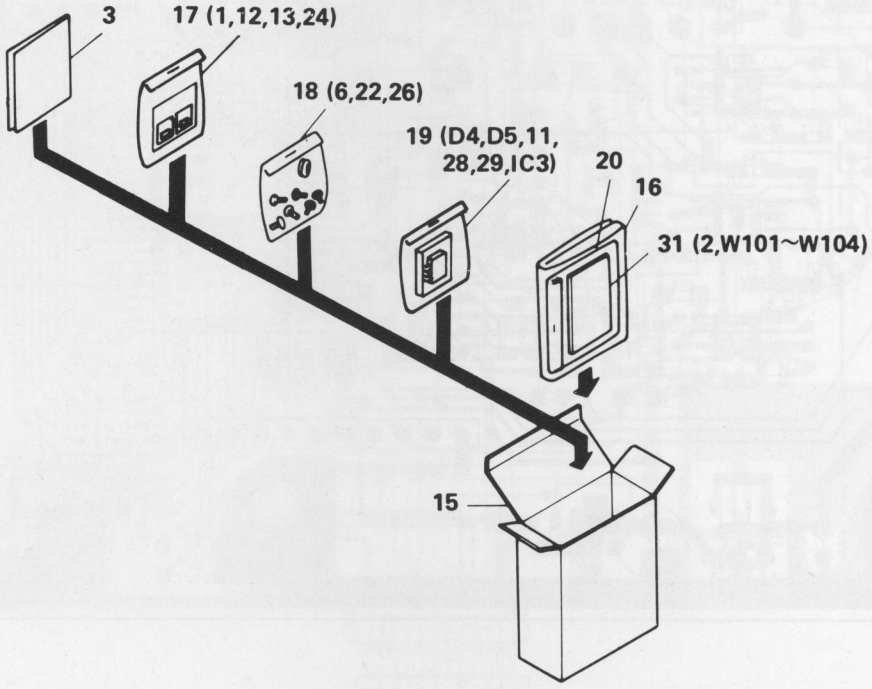

KSK-2 (SCAN & DQT/QT)

Type of Scan . . . . . Priority and channel scan. Programmable to non-priority channel scan.

Scan Detection . . . . . Programmable to carrier detect, QT (Quiet Talk) detect, or DQT (Digital Quiet Talk) detect, per channel.
Programmable to carrier only detect on selected priority channel.

Priority Channel . . . . . Programmable, either user selectable (by channel selector switch) or fixed.

Priority Sampling Time

	Carrier on Priority channel	Non carrier on Proirity channel
Carrier Detect	Less than 25 msec.	Less than 25 msec.
QT Detect	Less than 125 msec.	Less than 25 msec.
DQT Detect	Less than 175 msec.	Less than 25 msec.

Note : Sampling time is automatically controlled by microprocessor to minimize above maximum figure by condition (ie. QT tone frequency, etc.)

Priority lookback Time

No carrier on any channel . . . . . Everyother channel scan step

No carrier on priority channel . . . . . Programmable 400 – 700 msec. (50 msec. step)
Programmable 0.75 – 2.5 sec. (0.125 sec. step)

Carrier with different tone on priority channel . . . . Programmable 0.75 – 2.5 sec. (0.125 sec. step)

Microphone Offhook Destination . . . . . Programmable either, revert to priority channel, or stay on the present channel

Channel scan speed . . . . . 40 channels per second (carrier detection)

Scan Resume Delay . . . . . Programmable 0.75 – 4.5 sec. (0.25 sec. step)

Channel Deletion . . . . . User programmable DELETE/ADD operation

Signaling

QT Decoder/Encoder

Decoder/Encoder tone frequency . . . . . 67.0 to 250.3 Hz (in 0.1 Hz steps)

Decoder response time (T1) . . . . . T1 = 100/QT tone frequency x 200 msec. or less

Encoder response time (T2) . . . . . T2 = 100/QT tone frequency x 20 msec. or less

Squelch tail elimination time (Tr) . . . . . Tr = 100 msec. or less

Encoder frequency error . . . . . ± 0.5% or less

Squelch sensitivity . . . . . SINAD 8dB or less

DQT Decoder/Encoder

DQT code . . . . . 23 bits total ; a 3-digit octal number (0 – 7, 12 bits) with error correction (11 bits)

Decoder response time (T3) . . . . . T3 = 200 msec. or less

Encoder response time (T4) . . . . . T4 = 20 msec. or less

Turn-off code transmission time (Toff) . . . . . Toff = 156 msec.

Encoder pulse width error . . . . . ± 0.7% or less

Squelch sensitivity . . . . . SINAD 8dB or less

Time-out-timer . . . . . Programmable OFF, 15,30,45,60,75,90,105,120,135,150,165,180,195,210,225 sec.

Busy Channel lockout . . . . . Programmable

SPECIFICATIONS

GENERAL

Frequency Range	150 to 174MHz
Number of Channels	9 semi-duplex channels (Modifiable to 16 semi-duplex channels)
Channel Spacing	30kHz (PLL channel step 5kHz)
Input Voltage	120V AC 50/60Hz
Power Consumption	230 watts max. (Transmit)
Duty Cycle	Receiver 100%, Transmitter 50%
Temperature Range	−30°C to +60°C (−22°F to +140°F)
Dimensions & Weight	4.72" (120mm) H x 12.99" (330mm) W x 15.08" (383mm) D, 27.56lbs (12.5kg)

RECEIVER

(Measurements made per EIA standard EIA-204-C)

RF Input Impedance	50Ω
Sensitivity	
EIA 12dB SINAD	0.35μV
20dB Quieting	0.45μV
Squelch Sensitivity	0.2μV threshold
Modulation Acceptance	±7kHz
Adjacent Channel Selectivity	−85dB
Intermodulation	−80dB
Spurious and Image Rejection	−90dB
Audio Power Output	4 watts at 4Ω less than 5% distortion
Frequency Stability	±0.0005% from −30°C to +60°C
Channel Frequency Spread	4MHz

TRANSMITTER

(Measurements made per EIA standard EIA-152-B)

RF Power Output	50 watts adjustable to 20 watts
RF Output Impedance	50Ω
Spurious and Harmonics	−80dB
Modulation	
Direct FM Modulation	F3E, ±5kHz for 100% at 1000Hz
FM Noise	−50dB
Microphone Impedance	Low impedance
Audio Distortion	Less than 3% at 1000Hz
Frequency Stability	±0.0005% from −30°C to +60°C
Channel Frequency Spread	7MHz

KENWOOD CORPORATION
14-6, Dogenzaka 1-chome, Shibuya-ku, Tokyo 150, Japan

KENWOOD SERVICE CORPORATION
P.O. BOX 22745, 2201 East Dominguez Street, Long Beach, CA 90801-5745, U.S.A.

KENWOOD ELECTRONICS DEUTSCHLAND GMBH
Rembrücker Str. 15, 6056 Heusenstamm, Germany

KENWOOD ELECTRONICS BENELUX N.V.
Mechelsesteenweg 418 B-1930 Zaventem, Belgium

TRIO-KENWOOD FRANCE S.A.
13, Boulevard Ney, 75018 Paris, France

TRIO-KENWOOD U.K. LIMITED
KENWOOD House, Dwight Road, Watford, Herts., WD1 8EB United Kingdom

KENWOOD ELECTRONICS NEDERLAND B.V.
Amsterdamseweg 35, 1422 AC Uithoorn, The Netherlands

KENWOOD ELECTRONICS ITALIA S.p.A.
Via G. Sirtori, 7/9 20129 Milano, Italy

KENWOOD ESPAÑA S.A.
Bolivia, 239-08020 Barcelona, Spain

KENWOOD ELECTRONICS AUSTRALIA PTY. LTD.
(A.C.N. 001 499 074)
P.O. Box 504, 8 Figtree Drive, Australia Centre, Homebush, N.S.W. 2140, Australia

KENWOOD & LEE ELECTRONICS, LTD.
Unit 3712-3724, Level 37, Tower one Metroplaza, 223 Hing Fong Road, Kwai Fong, N.T., Hong Kong

KENWOOD ELECTRONICS CANADA INC.
6070 Kestrel Road, Mississauga, Ontario, Canada L5T 1S8

1988-6/1990-3/1992-5/1992-7/1994-3/1995-2 (N) 150