NOTES:

1. UNLESS OTHERWISE STATED:
   RESISTOR VALUES ARE IN OHMS (K = 1000)
   CAPACITOR VALUES ARE IN MICROFARADS
2. RELAY KIT IS AN OPTIONAL ACCESSORY ITEM. REFER TO RELAY APPLICATION CHART FOR CR15, JU8 AND JU9 USAGE WITH RELAY.
3. USE OF THIS RESISTOR AND CAPACITOR IS DETERMINED AT FACTORY.
4. REFER TO JUMPER TABLE

JUMPER TABLE

APPLICATION	JU1	JU2	JU3	JU4	JU5	JU6	JU7	JU8	JU9	JU10	JU11	JU12	JU13	JU14	JU15
LINE CONTROL BASE	OUT	OUT	IN	OUT	OUT	OUT	IN	IN	IN	OUT	OUT	OUT	SELECTED DELAY	IN	OUT
REPEATER (RT) STATION WITHOUT WIRE LINE CONTROL	OUT	OUT	IN	IN "PL"	IN	IN	IN	IN	IN	IN	IN	IN	SELECTED DELAY	IN "CS"	IN "PL"
REPEATER (RT) STATION WITH WIRE LINE CONTROL	OUT	OUT	IN	IN "PL"	NOTE 6	NOTE 6	IN	IN	IN	IN	OUT	IN	SELECTED DELAY	IN "CS"	IN "PL"
BASE (RA) STATION	IN	OUT	IN	IN "PL"	IN	IN	IN	*	*	OUT	OUT	OUT	SELECTED DELAY	IN "CS"	IN "PL"
REPEATER (RA) STATION	OUT	OUT	IN	IN "PL"	IN	IN	OUT	*	*	OUT	OUT	OUT	SELECTED	IN "CS"	IN "PL"
COMMUNITY REPEATER (RT) STATION	OUT	OUT	IN	IN	IN	IN	IN	IN	IN	IN	IN	IN	SELECTED DELAY	OUT	IN

5. VOLTAGE READINGS SHOWN ARE FOR TWO CONDITIONS:
   USQ = UNSQUELCHED
   FSQ = FULLY SQUELCHED
6. JUMPERS JU5 & JU6 ARE USED IN DC–CONTROLLED "PL" REPEATER STATIONS WHEN SUCH STATIONS CONTAIN AN UNSUFFIXED DC TRANSFER MODULE.
7. CAPACITOR C18 IS .01 uF IN STANDARD APPLICATIONS. CAPACITOR C18 IS CHANGED TO 10 uF WHEN THE C145 TAC ENCODER OPTION IS INSTALLED.

* RELAY APPLICATION CHART

TLN4151A RELAY KIT	DIODE CR15	JU8
NOT USED	OUT	IN
USED	IN	OUT

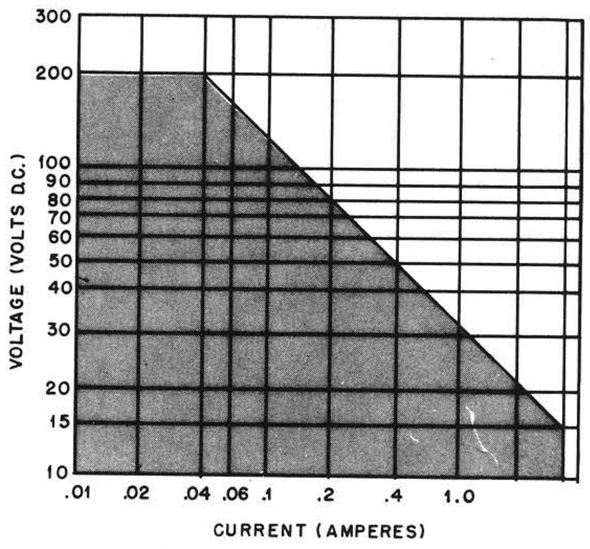

LOAD MUST BE IN SHADED AREA

TLN4151A RELAY KIT RELAY CONTACT RATING

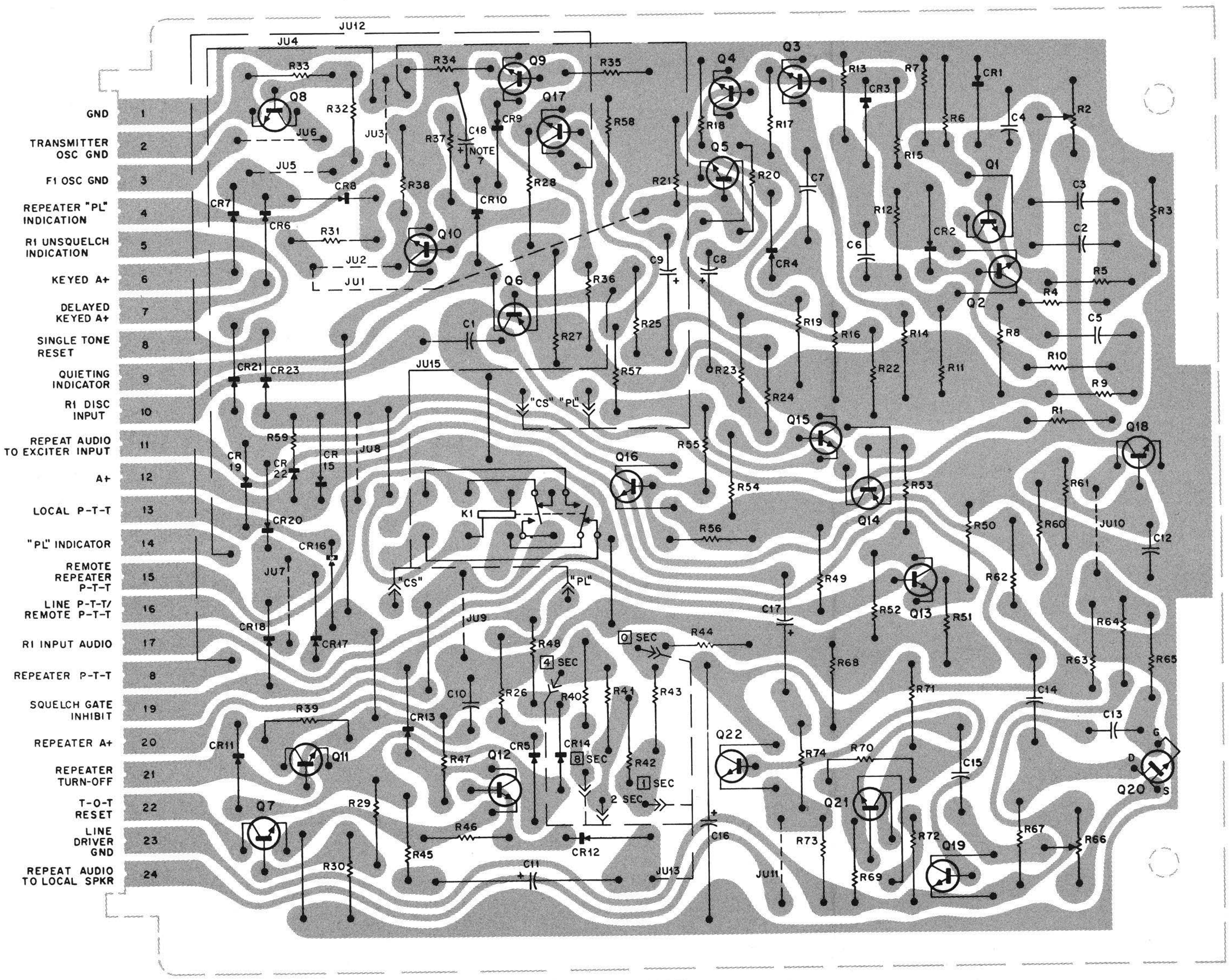

SHOWN FROM SOLDER SIDE

BD-DEPS-8239-0

OL-DEPS-8240-A

SQUELCH GATE MODULE

MODEL TLN4662A

FUNCTION -
Measures received noise levels and controls transmitter keying.

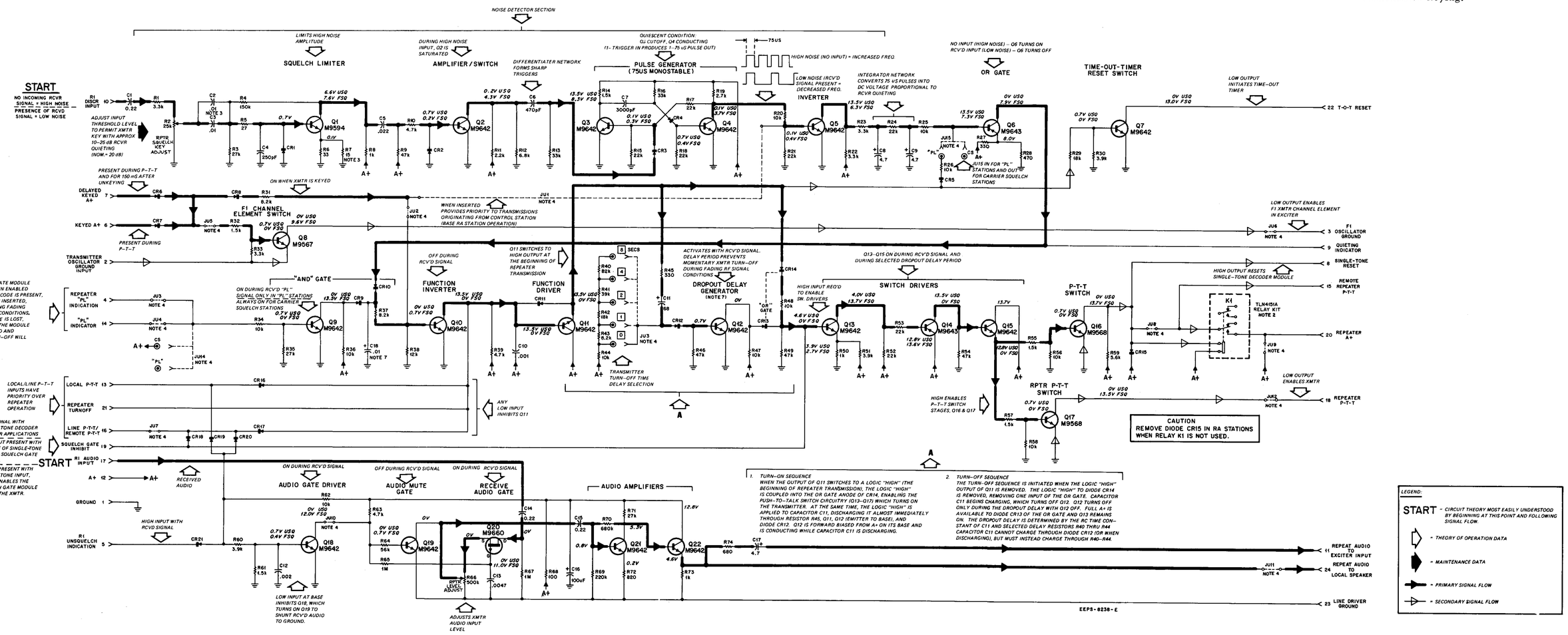

LEGEND:

START - CIRCUIT THEORY MOST EASILY UNDERSTOOD BY BEGINNING AT THIS POINT AND FOLLOWING SIGNAL FLOW.

= THEORY OF OPERATION DATA

= MAINTENANCE DATA

= PRIMARY SIGNAL FLOW

= SECONDARY SIGNAL FLOW

SQUELCH GATE MODULE

PARTS LIST SHOWN ON BACK
68P81015E33-G
2/23/76-NPC