J501

AUX +13.8V (A++)	2	
AUDIO GROUND (GND A)	1	

(PIN VIEW)

REFERENCE SYNTHESIZER POWER

P801

RX2 LOCK*	2	1	+9.6V
AUDIO GROUND (GND A)	4	3	TX MOD AUDIO
RAW RX2 AUDIO	6	5	RAW RX1 AUDIO
TX LOCK*	8	7	ANTENNA RELAY ENABLE*
PA FULL POWER*	10	9	RX2 STROBE
PA ON*	12	11	AGC REF (800/896 MHz)
PA KEY*	14	13	RX1 LOOP
PA POWER CUTBACK*	16	15	RX1 LOCK*
TX LOOP	18	17	SD0
SA2	20	19	SD1
SA1	22	21	SD2
SA0	24	23	SD3
TX STROBE	26	25	RX1 STROBE

(PIN VIEW)

CONTROL TRAY INTERFACE

P262B

RX LOCK*	7	8	SD2
SD3	6	9	SD1
SD0	5	10	SA0
RX LOOP	4	11	SA1
RAW RX AUDIO	3	12	SA2
AGC REF (800/896 MHz)	2	13	RX STROBE
MAIN +13.8V (A+)	1	14	+5V

(PIN VIEW)

UNIBOARD RECEIVER SYNTHESIZER

P322B

TRANSMIT MOD AUDIO	7	8	+9.6V
SD0	6	9	AUDIO GROUND (GND A)
SD3	5	10	SD1
TX LOOP	4	11	SD2
SA0	3	12	TX LOCK*
SA2	2	13	MOD ENABLE
TX STROBE	1	14	SA1

(PIN VIEW)

UNIBOARD TRANSMIT SYNTHESIZER

P901

SA2	8	9	SD2
SD1	7	10	SA1
SD0	6	11	SD3
RX2 STROBE	5	12	SA0
AUDIO GROUND (GND A)	4	13	MAIN +13.8V (A+)
RAW RX2 AUDIO	3	14	MAIN +13.8V (A+)
AUDIO GROUND (GND A)	2	15	N.C.
RX2 LOCK*	1	16	N.C.

(PIN VIEW)

2ND RF TRAY INTERFACE

P402B

DRIVER FORWARD VOLTAGE	7	8	PA KEY*
PA FULL POWER*	6	9	CIRCULATOR LOAD TEMPERATURE
METERING FINAL REFLECTED VOLTAGE	5	10	THERMAL SUM POINT
+5	4	11	AUDIO GROUND (GND A)
MAIN +13.8V (A+)	3	12	METERING FINAL FORWARD VOLTAGE
NORMALIZED IF ENVELOPE (800/896 MHz)	2	13	FINAL FORWARD VOLTAGE
PA POWER CUTBACK*	1	14	PA ON*

(PIN VIEW)

UNIBOARD POWER CONTROL

J500

AUX +13.8V (A++)	3	
+9.6V	2	
ANTENNA RELAY ENABLE*	1	

(PIN VIEW)

ANTENNA RELAY CONTROL

P603

1	AUX +13.8V (A++)
2	MAIN +13.8V (A+)
3	AUDIO GROUND (GND A)
4	GND B
5	OVERVOLTAGE ALARM*
6	BATTERY REVERT* (AC FAIL*)
7	PLUG KEY
8	N.C.
9	N.C.

(PIN VIEW)

MAIN POWER SUPPLY

P701

1	AUX +13.8V (A++)
2	PLUG KEY
3	OVERVOLTAGE ALARM*
4	BATTERY REVERT* (AC FAIL*)
5	GND B
6	NORMALIZED IF ENVELOPE (800/896 MHz)

(PIN VIEW)

STATION DC POWER CONTROL

J512

(PIN VIEW)

CIRCULATOR LOAD TEMPERATURE

J502

FINAL REFLECTED VOLTAGE	6	3	PA KEY*
AUDIO GROUND (GND A)	5	2	CIRCULATOR LOAD TEMPERATURE
FINAL FORWARD VOLTAGE	4	1	FINAL HEATSINK TEMPERATURE

(PIN VIEW)

FINAL PA INTERFACE

J596

N.C.	6	3	PA KEY*
AUDIO GROUND (GND A)	5	2	N.C.
DRIVER FORWARD VOLTAGE	4	1	DRIVER HEATSINK TEMPERATURE

(PIN VIEW)

DRIVER PA INTERFACE

NOTE: AN ASTERICK FOLLOWING
A SIGNAL NAME INDICATES
AN ACTIVE LOW

UNIB
POV
CON

NOTES:

1. UNLESS OTHERWISE SPECIFIED, ALL RESISTORS ARE IN OHMS, ALL CAPACITOR VALUES ARE IN MIOCROFARADS.

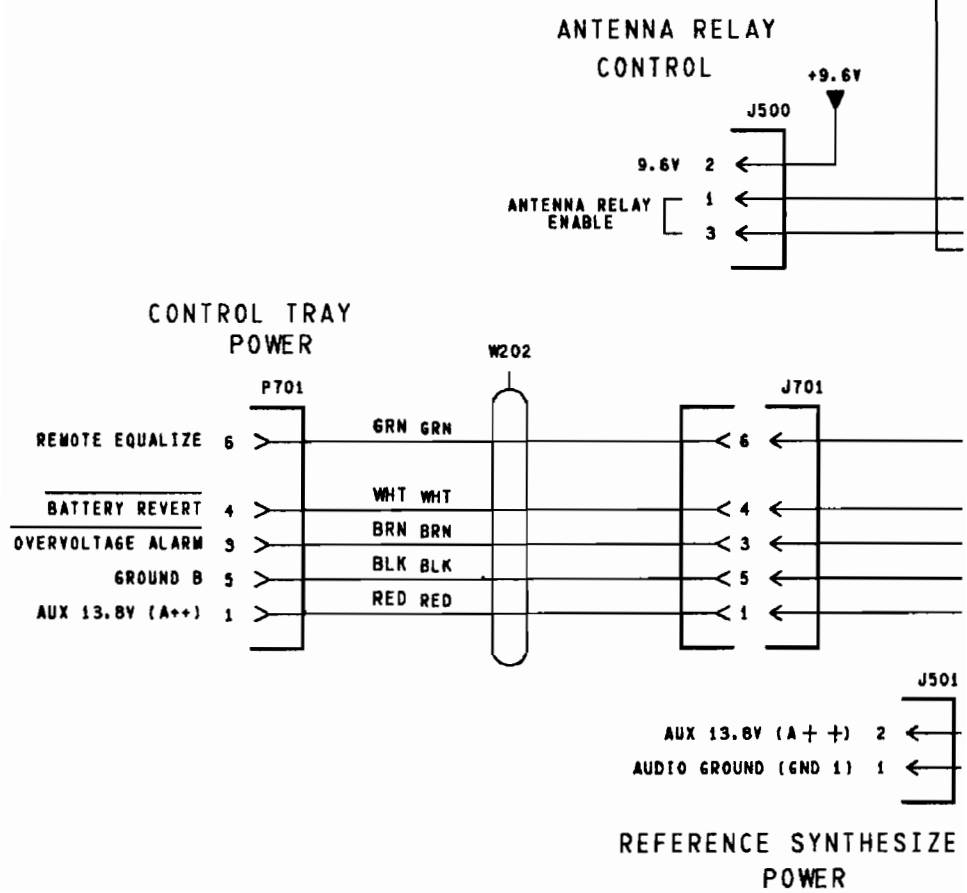

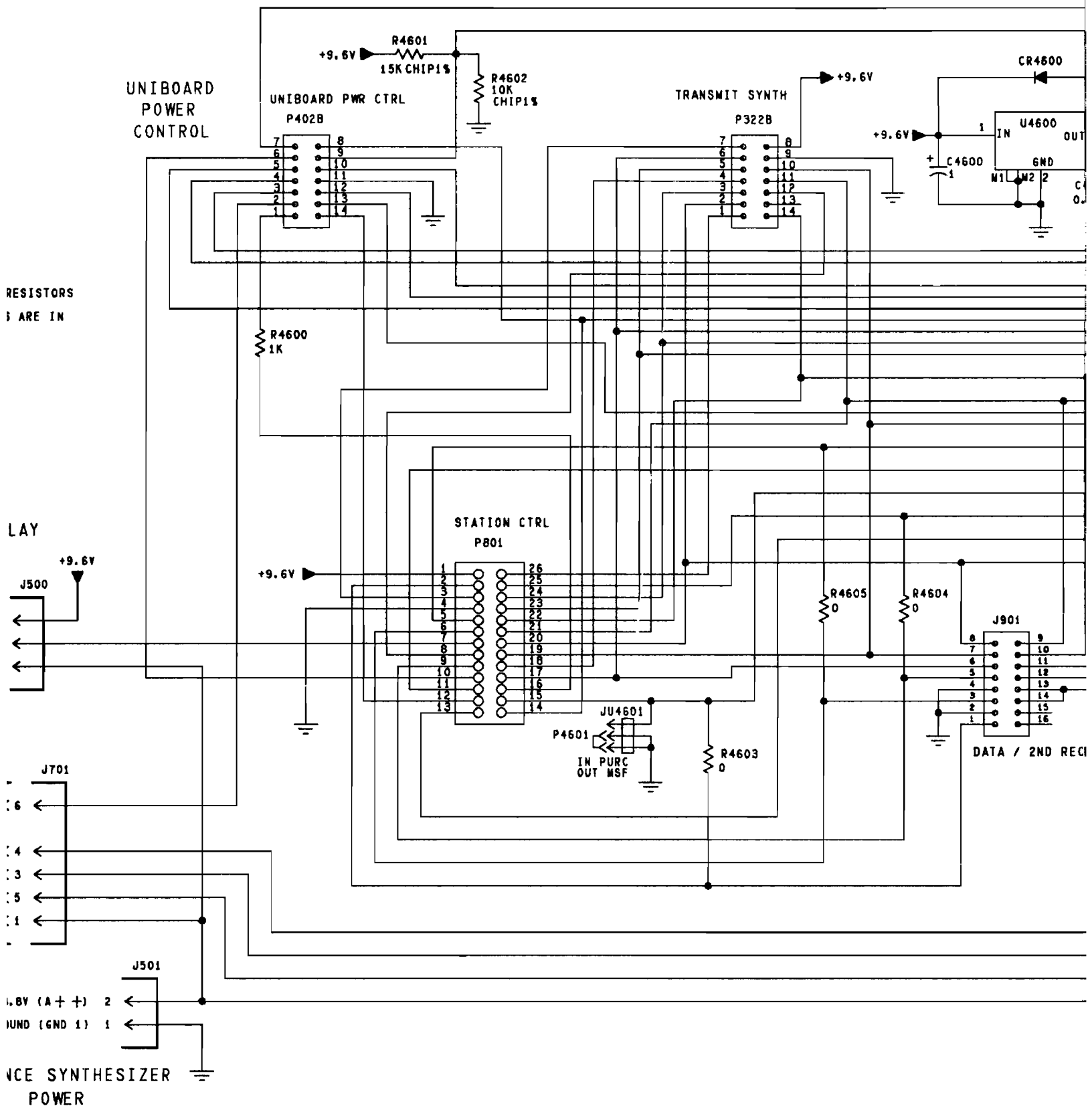
UNIBOARD POWER CONTROL
UNIBOARD PWR CTRL
P402B
+9.6V
R4601
15K CHIP1%
R4602
10K
CHIP1%
TRANSMIT SYNTH
P322B
+9.6V
CR4600
U4600
IN
OUT
GND
M1
M2
C4600
RESISTORS
ARE IN
R4600
1K
STATION CTRL
P801
+9.6V
R4605
0
R4604
0
J901
DATA / 2ND REC
JU4601
P4601
IN PURC
OUT MSF
R4603
0
LAY
+9.6V
J500
J701
J501
NCE SYNTHESIZER
POWER

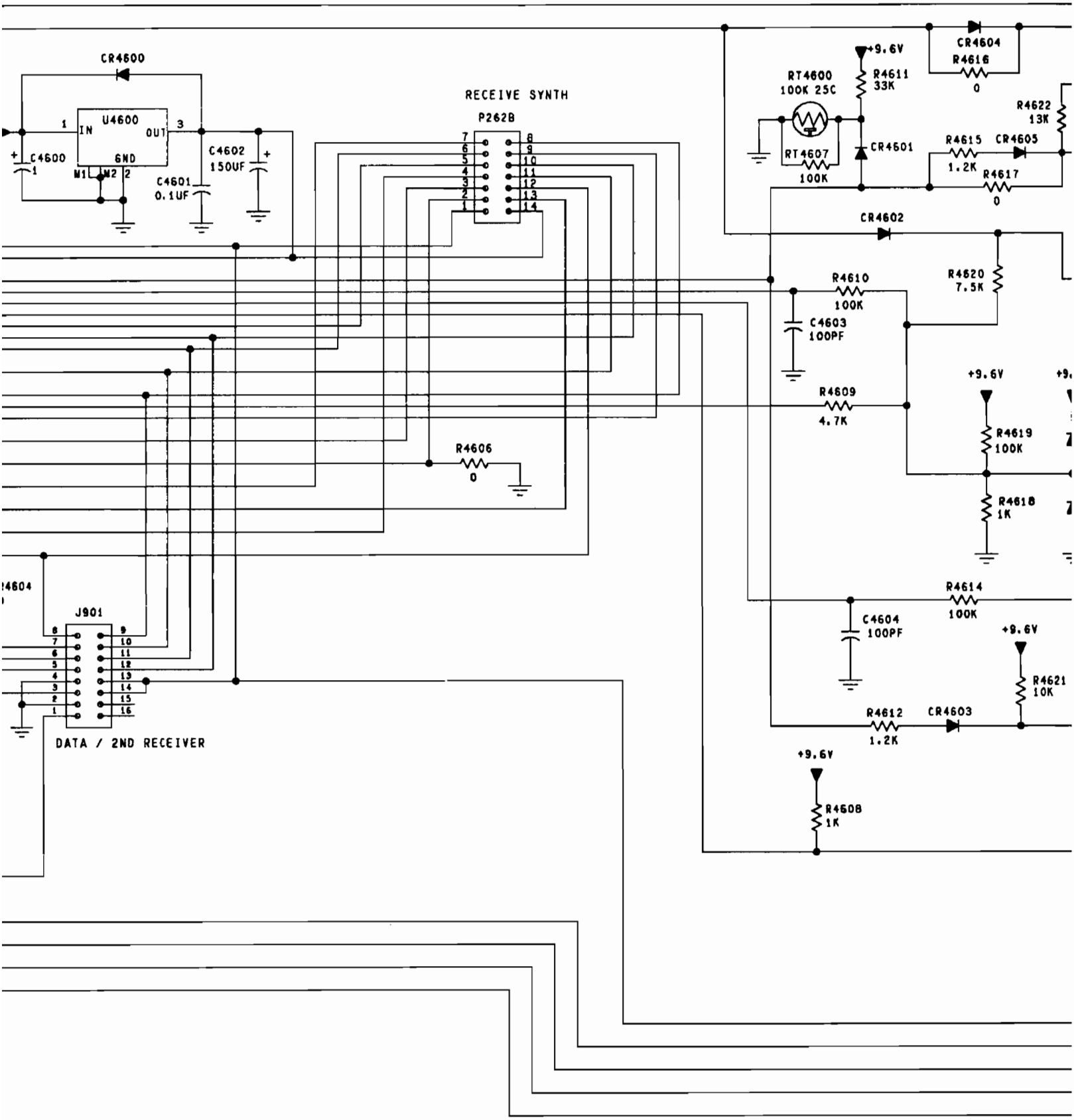
CR4600
U4600
IN
OUT
GND
M1
M2
C4600
C4601
0.1UF
C4602
150UF
RECEIVE SYNTH
P262B
J901
DATA / 2ND RECEIVER
R4606
0
RT4600
100K 25C
RT4607
100K
+9.6V
R4611
33K
CR4601
CR4604
R4616
0
R4622
13K
R4615
1.2K
CR4605
R4617
0
CR4602
R4610
100K
R4620
7.5K
C4603
100PF
R4609
4.7K
R4619
100K
R4618
1K
R4614
100K
C4604
100PF
R4621
10K
R4612
1.2K
CR4603
R4608
1K

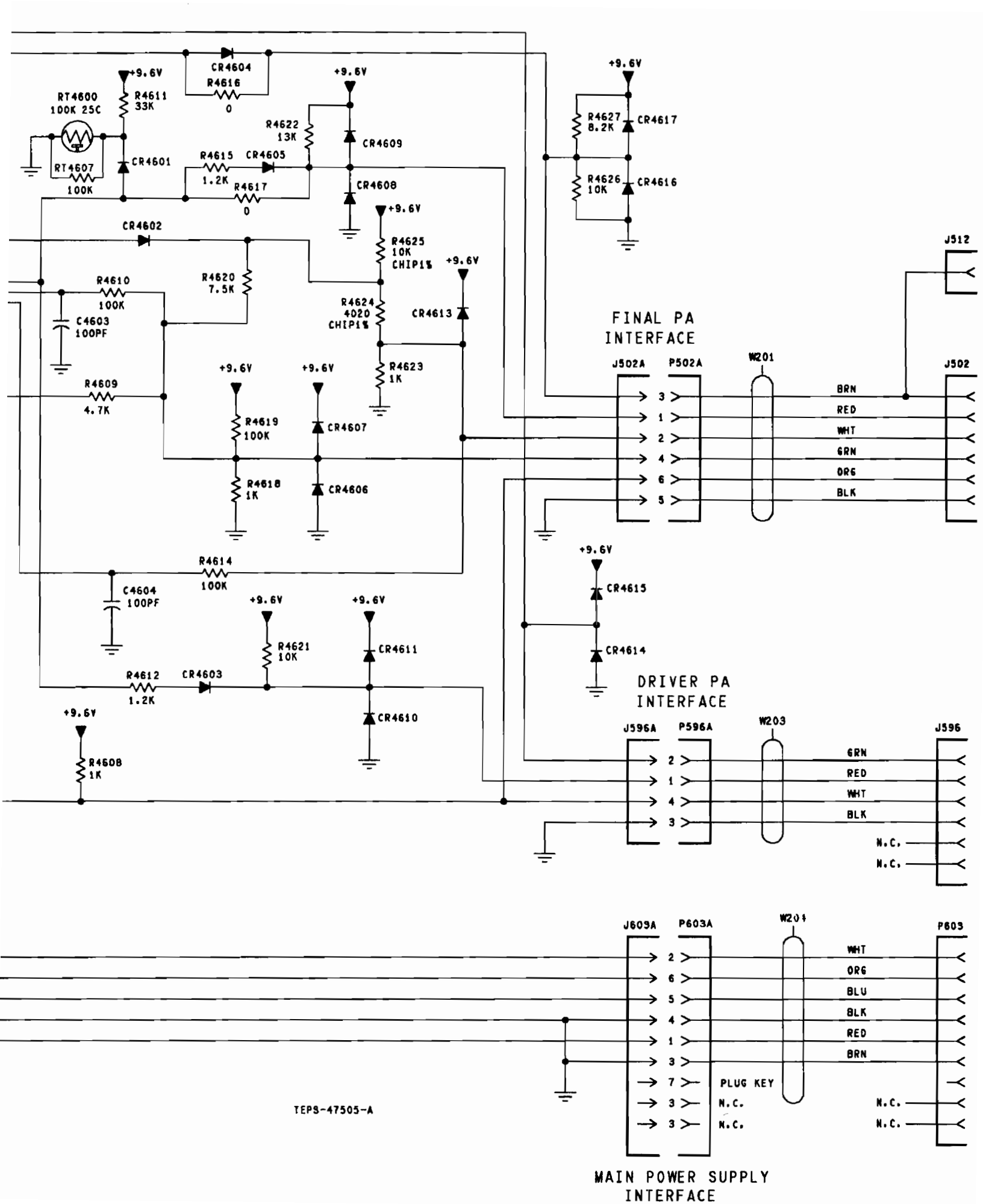
+9.6V
CR4604
R4616
0
RT4600
100K 25C
R4611
33K
CR4601
RT4607
100K
R4615
1.2K
CR4605
R4617
0
R4622
13K
CR4609
CR4608
CR4602
R4625
10K
CHIP1%
R4610
100K
R4620
7.5K
C4603
100PF
R4624
4020
CHIP1%
CR4613
R4623
1K
R4609
4.7K
R4619
100K
CR4607
R4618
1K
CR4606
R4614
100K
C4604
100PF
R4621
10K
CR4611
R4612
1.2K
CR4603
CR4610
R4608
1K
R4627
8.2K
CR4617
R4626
10K
CR4616
FINAL PA
INTERFACE
J502A
P502A
W201
J512
J502
BRN
RED
WHT
GRN
ORG
BLK
CR4615
CR4614
DRIVER PA
INTERFACE
J596A
P596A
W203
J596
GRN
RED
WHT
BLK
N.C.
N.C.
J603A
P603A
W204
P603
WHT
ORG
BLU
BLK
RED
BRN
PLUG KEY
N.C.
N.C.
N.C.
N.C.
TEPS-47505-A
MAIN POWER SUPPLY
INTERFACE

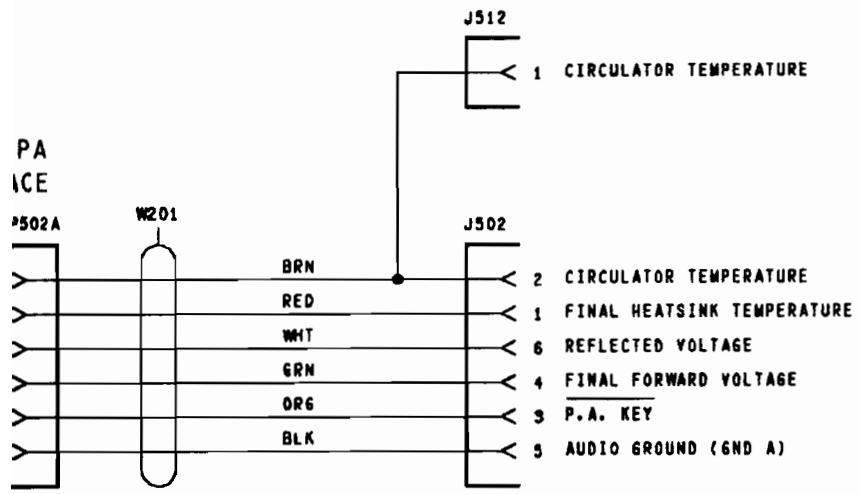

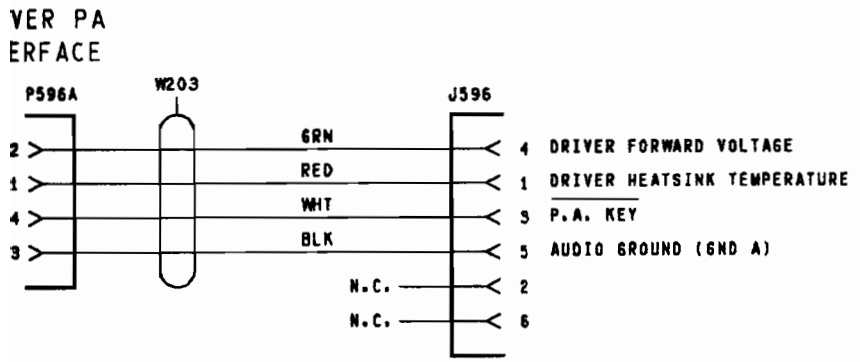

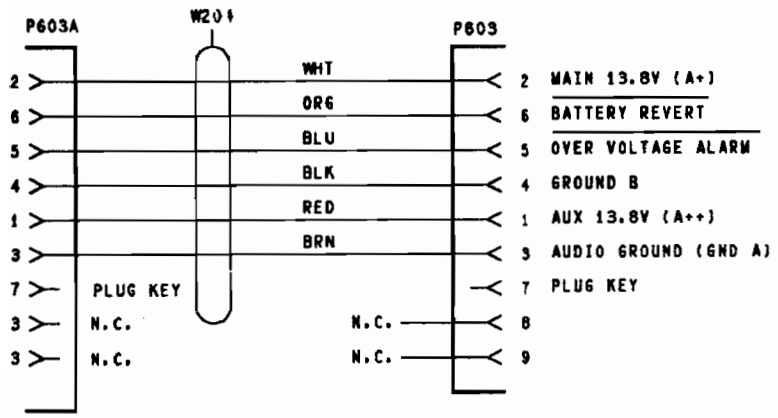

WER SUPPLY
RFACE

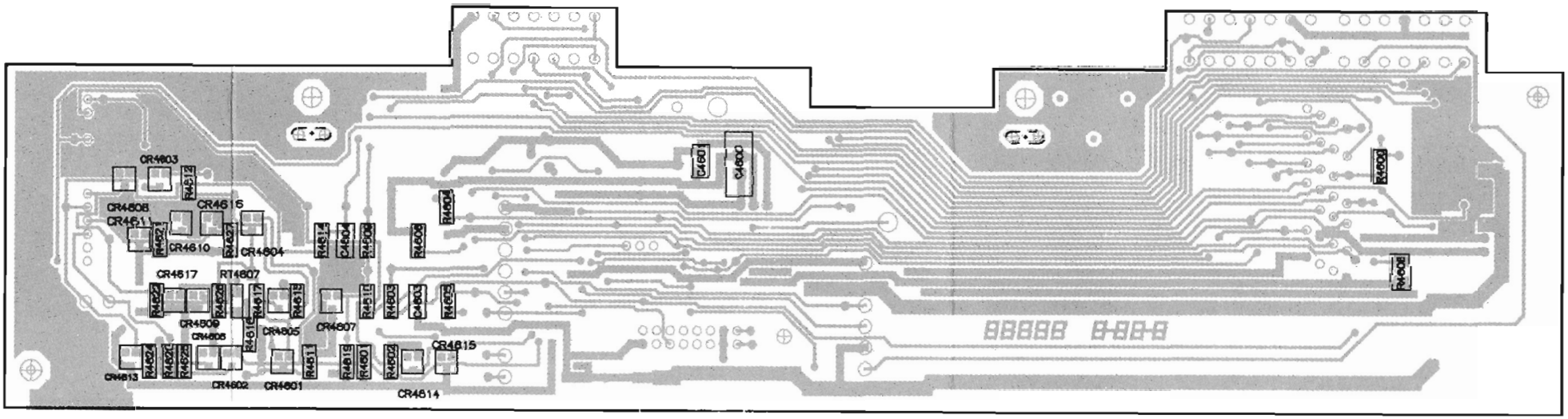

SHOWN FROM SOLDER SIDE

OL-TEPS-47642-0
BD-TEPS-47641-0

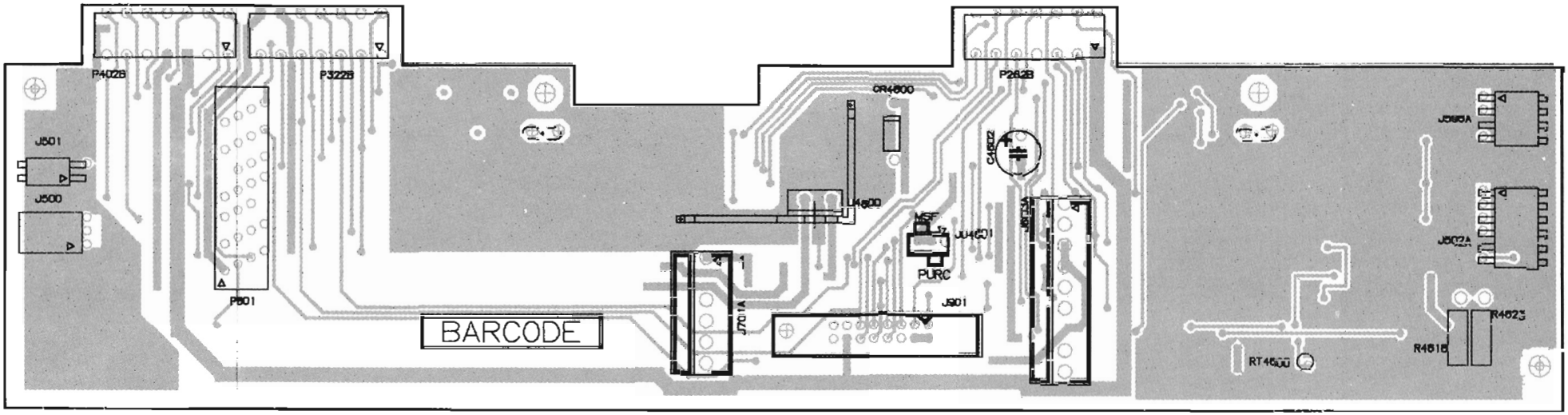

SHOWN FROM COMPONENT SIDE

BD-TEPS-47640-0
OL-TEPS-47639-0

INTERCONNECT BOARD
SIGNAL INTERCONNECT CHART
MASTER BILL OF MATERIAL CHART

INTERCONNECT CHART

CONNECTOR DESCRIPTION	REF. DES.	AUDIO GROUND (GND A) ⏚	GND B ⏚	AGC REF (800/896MHZ)	MAIN +13.8V (A+)	AUX +13.8V (A++)	+5V	+9.6V	ANTENNA RELAY ENABLE *	BATTERY REVERT * (AC FAIL *)	CIRCULATOR LOAD TEMPERATURE	FINAL FORWARD VOLTAGE	FINAL HEATSINK TEMPERATURE	DRIVER HEATSINK TEMPERATURE	MOD ENABLE	OVERVOLTAGE ALARM *	PA FULL POWER *	PA KEY *	PA ON *	PA POWER CUTBACK *	RX2 LOCK *	RAW RX2 AUDIO	RX2 STROBE	RAW RX (RX1) AUDIO	RX (RX1) LOCK *	RX (RX1) LOOP	RX (RX1) STROBE	FINAL REFLECTED VOLTAGE	NORMALIZED IF ENVELOPE (800/896MHZ)	SA0 (SYNTH ADRS BIT 0)	SA1 (SYNTH ADRS BIT 1)	SA2 (SYNTH ADRS BIT 2)	SD0 (SYNTH DATA BIT 0)	SD1 (SYNTH DATA BIT 1)	SD2 (SYNTH DATA BIT 2)
	NOTES										9,14	10,11	6,9	6						9				7	7,8,14	7	7	13							
ANTENNA RELAY POWER	J500					3		2	1																										
FINAL PA INTERFACE	J502A	5									3#	4#	1#					6										2#							
UNIBOARD RECEIVER SYNTHESIZER	P262B			2#	1		14																	3#	7#	4#	13			10	11	12	5	9	8
UNIBOARD TRANSMIT SYNTHESIZER	P322B	9						6#							13#															3	14	2	6	10	11
UNIBOARD POWER CONTROL	P402B	11			3		4				9	12 13	10				6#	8	14#	1								5	2#						
MAIN POWER SUPPLY	P603A	3#	4#		2#	1#				6#						5#																			
STATION DC POWER CONTROL	P701A		5			1				4						3													6						
CONTROL TRAY INTERFACE	P801	4		11				1	7#								10	14#	12	16#	2	6	9#	5	15	13	25#			24#	22#	20#	17#	19#	21#
2ND RF TRAY INTERFACE	P901	2,4			13 14																1	3	5							12	10	8	6	7	9
REFERENCE SYNTHESIZER POWER	J501	1				2																													
CIRCULATOR LOAD TEMPERATURE	J512										1#																								
DRIVER PA CONTROL	J596A	3												1#				4																	
MSF/PURC SELECTOR	J4601																								1,2, 3										

NORMALIZED IF ENVELOPE (800/896MHZ)	SA0 (SYNTH ADRS BIT 0)	SA1 (SYNTH ADRS BIT 1)	SA2 (SYNTH ADRS BIT 2)	SD0 (SYNTH DATA BIT 0)	SD1 (SYNTH DATA BIT 1)	SD2 (SYNTH DATA BIT 2)	SD3 (SYNTH DATA BIT 3)	DRIVER FOWARD VOLTAGE	TX MOD AUDIO	TX LOCK *	TX LOOP	TX STROBE	NO CONNECTION	PLUG KEY			
	10	11	12	5	9	8	6										
	3	14	2	6	10	11	5		7	12#	4#	1					
2#								7									
													8,9	7			
6														2			
	24#	22#	20#	17#	19#	21#	23#		3#	8	18	26#					
	12	10	8	6	7	9	11						15 16				
								2#									

TEPS-47673-0

1. THIS CHART SHOWS ALL INTERCONNECTIONS MADE BY THE PLATING ON BOTH SIDES OF THE INTERCONNECT BOARD AND INCLUDES CABLING WHERE APPLICABLE.
2. ALL PIN NUMBERS IN EACH VERTICAL COLUMN ARE ELECTRICALLY COMMON UNLESS NOTED (SEE NOTES 6-13).
3. TO TRACE INTERCONNECTIONS FROM ANY STARTING POINT TO ALL OTHER COMMON POINTS PROCEED AS FOLLOWS:

   STEP 1. FIND THE CONNECTOR DESCRIPTION OR REFERENCE DESIGNATION ON THE LEFT HAND COLUMN OF THE CHART.

   STEP 2. FIND THE DESIRED PIN NUMBER. ALL PINS OF A SPECIFIC CONNECTOR ARE LISTED IN THE ROW THAT EXTENDS TO THE RIGHT.

   STEP 3. NOTE THE FUNCTION OF THE DESIRED PIN.THE FUNCTION IS LISTED AT THE TOP OF THE COLUMN IN WHICH THE PIN NUMBER APPEARS. ALL OTHER PINS LISTED IN THE SAME COLUMN HAVE THE SAME FUNCTION. TRACE BACK TO THE LEFT HAND COLUMN TO FIND THE DESCRIPTIONS AND REFERENCE DESIGNATIONS OF OTHER CONNECTIONS HAVING ELECTRICALLY COMMON PINS.
4. (#) INDICATES FUNCTION SOURCE.

   EXAMPLE:
   RADIO INTERFACE CONNECTOR, P801, PIN 24 PROVIDES THE SA0 (SYNTHESIZER ADDRESS BIT 0) INPUT TO THE INTERCONNECT BOARD FOR DISTRIBUTION TO THE TRANSMIT SYNTHESIZER CONNECTOR P322B, PIN 3 AND RECEIVER SYNTHESIZER CONNECTOR P262B, PIN 10.
5. (*) INDICATES ACTIVE LOW SIGNAL.
6. FINAL HEATSINK TEMPERATURE (AND DRIVER HEATSINK TEMPERATURE, IF APPLICABLE) GIVE(S) P402B PIN 10, THERMAL SUM POINT.
7. THESE ARE CALLED RX ON UNIBOARD CONNECTOR, BUT RX1 ON STATION CONTROL CONNECTOR TO DISTINQUISH FROM RX2 SIGNALS.
8. JUMPER J4601 GROUNDS RX (RX1) LOCK ON PURC STATIONS, J4601 PINS 1,2,3 ARE COMMON ON PURC ONLY. JUMPER MUST BE IN OPEN POSITION FOR MSF STATIONS.
9. DIRECT CONNECTION ONLY ON TRN7140A.
10. DIRECT CONNECTION ONLY ON TRN7140A, TRN7141A, TRN7164A, AND TRN7169A.
11. SIGNAL IS FED THROLGH CIRCUITRY TO GIVE P402B, PIN 12, METERING FINAL FORWARD VOLTAGE, EXCEPT ON TRN7140A, WHERE METERING IS DONE ON THE UNIBOARD.
12. FINAL REFLECTED VOLTAGE ON J502A IS FED THROUGH CIRCUITRY TO GIVE P402B, PIN 5, METERING FINAL REFLECTED VOLTAGE, EXCEPT ON TRN7140A, WHERE NO REFLECTED METERING IS PROVIDED.
13. J502A, PIN 3 SOURCES SIGNAL FOR TRN7140A AND TRN7169A, WHILE J512, PIN 1 SOURCES SIGNAL FOR TRN7142A.