MOTOROLA

SPECTRA TAC
Total Area Coverage Comparator

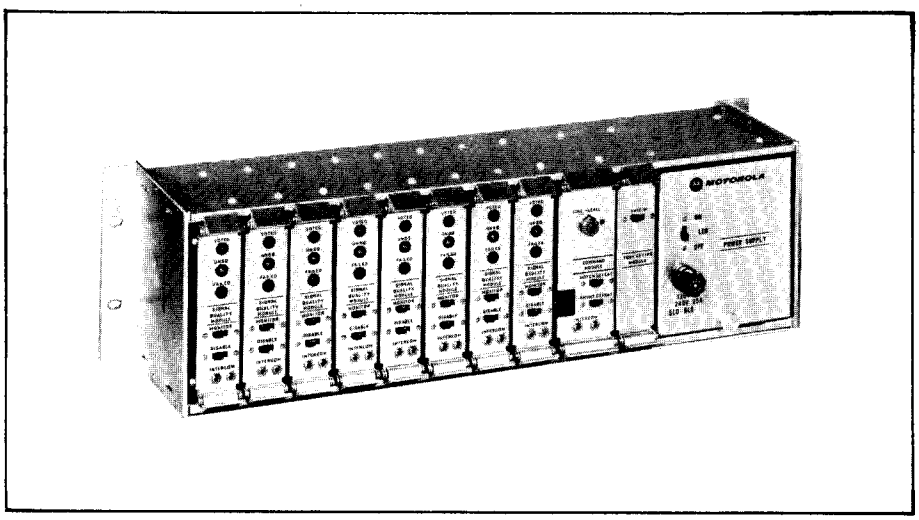

This document includes the following revisions:

SMR-4161, 3/15/81
SMR-5211, 12/8/86
SMR-5276, 3/3/87
SMR-5684, 8/8/89
SMR-5830, 4/26/91
SMR-5928, 2/5/93
SMR-6112, 2/10/95
SMR-6117, 3/10/95
SMR-6125, 7/7/95
SMR-6222, 9/19/97
SMR-6229, 10/31/97

THIS MANUAL HAS BEEN
DISCONTINUED

Reference Manual

68P81039E50-A

MOTOROLA INC.

instruction manual revision

GENERAL

This revision outlines changes that have occurred since the printing of your instruction manual. Use this information to correct your manual.

INSTRUCTION MANUALS AFFECTED:

68P81002E96	Model TLN1181A Single Tone Decoder Module
68P81013E60	MICOR COMPA-STATION Base and Repeater Radio 25-50 MHz, 100 W
✓ 68P81013E65	MICOR COMPA-STATION Base Radio Remote Control 132-174 MHz
68P81013E70	MICOR COMPA-STATION Base Radio 25-50 MHz Local Control
✓ 68P81013E75	MICOR COMPA-STATION Base Radio 132-174 MHz Local Control
68P81015E33	Model TLN4662A Squelch Gate Module
68P81016E15	MICOR COMPA-STATION Base Radio with Digital Decoder DC Remote Control 132-174 MHz
68P81016E19	Model TLN4638A F1 and F1-PL Tone Decoder Modules
68P81017E25	MICOR COMPA-STATION Base & Repeater Station 72-76 MHz, 30 W
68P81017E85	MICOR COMPA-STATION Base Radio Tone Remote Control with Digital Decoder 132-174 MHz
68P81018E14	Model TLN1467A Multifunction Digital Decoder
68P81018E26	MICOR Base Station Accessories, Metering and Intercom, Opt C149
✓ 68P81019E75	MICOR Upright Base and Repeater (RT) Station 132-174 MHz
68P81020E40	MICOR Base Station 4-Frequency, Tone Remote Control
68P81022E90	MICOR Upright Base and Repeater (RT) Station, 136-174 MHz, 250 & 375 W

68P81022E95	MICOR Upright Base and Repeater (RT) Station, 25-50 MHz, 300 Watts RF
68P81025E50	MICOR Base and Repeater Stations, 406-420 MHz, 450-470 MHz, 470-512 MHz
68P81025E55	MICOR Community Repeater, 406-420 and 450-512 MHz
68P81025E60	MICOR Base and Repeater Stations, Control and Application
68P81026E28	Model TRN6085A SPECTRA-TAC Encoder Module
68P81031E45	MICOR Base and Repeater Station, 851-866 MHz Tx, 806-812 MHz, Rx
68P81031E95	MICOR Community Repeater, 851-866 MHz Tx, 806-821 MHz Rx
68P81032E25	MICOR Super CONSOLETTE Control Station, 806-866 MHz
68P81033E10	PULSAR IMTS Base Stations, 450-512 MHz
68P81033E15	PULSAR IMTS Base Stations, 150.8-160 MHz
68P81033E20	PULSAR Tone Remote Adapter for IMTS Base Stations
68P81033E25	PULSAR Tone Remote Control Interface Unit
68P81036E36	Model TRN6085B SPECTRA TAC Encoder Module
68P81039E45	SPECTRA TAC Total Area Coverage, Voting and Satellite Receivers
68P81039E50	SPECTRA TAC Total Area Coverage, Comparator
68P81039E55	MICOR Base and Repeater Stations, 406-420 MHz, 450-470 MHz, 470-512 MHz
68P81105E20	Option C226 Service Intercom
68P81106E30	MICOR Base Station Accessories, Multiple Tone PL Options
68P81107E40	Option C269 SPECTRA TAC Encoder

ITEMS AFFECTED:

The following items (listed in the instruction manuals previously listed) are affected by the resistor part number changes that are listed under REVISION DETAILS.

TLN4044A	TLN5122A	TLN5946A	TRN6297A
TLN4048A	TLN5167A	TLN5948B	TRN6326A
TLN4054A	TLN5292A	TLN5955A	TRN6413A
TLN4635B	TLN5294A	TLN5956A	TRN6552A
TLN4636A	TLN5458A	TLN8773A	TRN6566A
TLN4637A	TLN5744A	TRN6002A	TRN6568A
TLN4638A	TLN5779A	TRN6006A	TRN6689A
TLN4658A	TLN5804A	TRN6007A	TRN6717A
TLN4659A	TLN5924B	TRN6080B	TRN6752A
TLN4660A	TLN5925A	TRN6083A	TRN6956A
TLN4661A	TLN5926A	TRN6085B	TRN8095A
TLN4662A	TLN5927A	TRN6087A	TRN8406A
TLN4663A	TLN5932A	TRN6091B	TRN8676A
TLN4664A	TLN5934A	TRN6093A	TRN8684B
TLN4665A	TLN5938A	TRN6095A	TRN8787A
TLN4667A	TLN5939A	TRN6097A	
TLN4668B	TLN5940B	TRN6100A	
TLN4669B	TLN5941A	TRN6101A	
TLN4670B	TLN5943A	TRN6165A	
TLN4852A	TLN5944A	TRN6166A	

REVISION DETAILS:

All 1/4 watt, carbon composition, fixed resistors used in the previously listed items are replaced with ±5%; 1/4 watt, carbon film, fixed resistors. Use the following cross-reference list to update the parts lists in your manual.

OHMS (±5%; 1/4 W)	NEW PART NO. (carbon film)	OHMS (±5%; 1/4 W)	NEW PART NO. (carbon film)	OHMS (±5%; 1/4 W)	NEW PART NO. (carbon film)
10	6-11009C01	470	6-11009C41	22k	6-11009C81
11	6-11009C02	510	6-11009C42	24k	6-11009C82
12	6-11009C03	560	6-11009C43	27k	6-11009C83
13	6-11009C04	620	6-11009C44	30k	6-11009C84
15	6-11009C05	680	6-11009C45	33k	6-11009C85
16	6-11009C06	750	6-11009C46	36k	6-11009C86
18	6-11009C07	820	6-11009C47	39k	6-11009C87
20	6-11009C08	910	6-11009C48	43k	6-11009C88
22	6-11009C09	1k	6-11009C49	47k	6-11009C89
24	6-11009C10	1.1k	6-11009C50	51k	6-11009C90
27	6-11009C11	1.2k	6-11009C51	56k	6-11009C91
30	6-11009C12	1.3k	6-11009C52	62k	6-11009C92
33	6-11009C13	1.5k	6-11009C53	68k	6-11009C93
36	6-11009C14	1.6k	6-11009C54	75k	6-11009C94
39	6-11009C15	1.8k	6-11009C55	82k	6-11009C95
43	6-11009C16	2k	6-11009C56	91k	6-11009C96
47	6-11009C17	2.2k	6-11009C57	100k	6-11009C97
51	6-11009C18	2.4k	6-11009C58	110k	6-11009C98
56	6-11009C19	2.7k	6-11009C59	120k	6-11009C99
62	6-11009C20	3k	6-11009C60	130k	6-11009D01
68	6-11009C21	3.3k	6-11009C61	150k	6-11009D02
75	6-11009C22	3.6k	6-11009C62	160k	6-11009D03
82	6-11009C23	3.9k	6-11007C63	180k	6-11009D04
91	6-11009C24	4.3k	6-11009C64	200k	6-11009D05
100	6-11009C25	4.7k	6-11009C65	220k	6-11009D06
110	6-11009C26	5.1k	6-11009C66	240k	6-11009D07
120	6-11009C27	5.6k	6-11009C67	270k	6-11009D08
130	6-11009C28	6.2k	6-11009C68	300k	6-11009D09
150	6-11009C29	6.8k	6-11009C69	330k	6-11009D10
160	6-11009C30	7.5k	6-11009C70	360k	6-11009D11
180	6-11009C31	8.2k	6-11009C71	390k	6-11009D12
200	6-11009C32	9.1k	6-11009C72	430k	6-11009D13
220	6-11009C33	10k	6-11009C73	470k	6-11009D14
240	6-11009C34	11k	6-11009C74	510k	6-11009D15
270	6-11009C35	12k	6-11009C75	560k	6-11009D16
300	6-11009C36	13k	6-11009C76	620k	6-11009D17
330	6-11009C37	15k	6-11009C77	680k	6-11009D18
360	6-11009C38	16k	6-11009C78	750k	6-11009D19
390	6-11009C39	18k	6-11009C79	820k	6-11009D20
430	6-11009C40	20k	6-11009C80	910k	6-11009D21
				1 meg	6-11009D22

MOTOROLA INC.

instruction manual revision

GENERAL

This revision outlines changes that have occurred since the printing of your instruction manual. Use this information to correct your manual.

INSTRUCTION MANUAL AFFECTED:

68P81033E20-A	*PULSAR* Tone Remote Adaptor for IMTS Base Stations
68P81033E25-C	*PULSAR* Tone Remote Control Interface Unit
68P81039E45-A	*Spectra-TAC* Voting and Satellite Receivers
68P81039E50-A	*Spectra-TAC* Total Area Coverage Comparator
68P81063E95-A	*GCC-80* D2000 Series General Communications Controller

REVISION DETAILS:

The parts list for the TKN6760A Battery Cable Kit has been revised as follow:

Reference Symbol	Motorola Part No.	Description	Change
--	29-859118	LUG, crimp	Added
--	39-10061A23	CONTACT, male (large)	Deleted

Please note the above changes on PL-3472 in your manuals as indicated below:

Manual No.	Section No. Affected
68P81033E20	68P81039E36
68P81033E25	68P81039E36
68P81039E45	68P81035E41
68P81039E50	68P81039E36
68P81063E95	68P81040E66

MOTOROLA INC.

instruction manual revision

GENERAL

This revision outlines changes that have occurred since the printing of your instruction manual. Use this information to correct your manual.

INSTRUCTION MANUAL AFFECTED:

68P81017E70-E	Digital *HEAR* DC Remote Control Console
68P81017E75-B	Digital *HEAR* Tone Remote Control Console
68P81033E20-A	*PULSAR* Tone Remote Adapter for *IMTS* Base Stations
68P81033E25-C	*PULSAR* Tone Remote Control Interface Unit
68P81039E45-A	*Spectra-TAC* Voting and Satellite Receiver
68P81039E50-A	*Spectra-TAC* Voting Comparator
68P81063E95-A	*GCC-80* D2000 Series General Communications Controller
68P81069E45-A	*SECURENET* Digital Voice Modem

REVISION DETAILS:

The parts list for the TKN6323A, TKN6760A, and TKN8472A Battery Cable Kits have been revised to change the two conductor cable from part no. 30-83155H01 to 30-83165R01. Please note this change in your manual as follows:

MANUAL NO.	SECTION/ DIAGRAM NO.	KIT NO.
68P81017E70	PEPS-10395	TKN6323A
68P81017E75	PEPS-10684	TKN6323A
68P81033E20	68P81039E36	TKN6760A
68P81033E25	68P81039E36	TKN6760A
68P81039E45	68P81035E41	TKN6760A
68P81039E50	68P81039E36	TKN6760A
68P81063E95	68P81040E66	TKN6760A
68P81069E45	68P81070E31	TKN8472A
68P81069E45	68P81071E76	TKN8472A

MOTOROLA INC.

instruction manual revision

GENERAL:

This revision outlines changes that have occurred since the printing of your instruction manual. Use this information to correct your manual.

INSTRUCTION MANUAL AFFECTED:

68P81033E20-A	*PULSAR* Tone Remote Adapter For IMTS Base Stations
68P81033E25-C	*PULSAR* Tone Remote Control Interface Unit
68P81039E50-A	*Spectra-TAC* Total Area Coverage Comparator
68P81081E60-O	Trunked Radio System Dual Path Simulcast Equipment
68P81119E86-O	*SFS1000* Site Frequency Standard

REVISION DETAILS:

The TRN6297A Power Supply Board has been replaced with TRN6297B. Replace section 68P81039E36 in your manual with the new updated issue "-C".

ATTACHMENT:

TPN1153A/TPN1170A Power Supply & TPN1141A
Emergency Power Kit 68P81039E36-C

POWER SUPPLY
MODEL TPN1153A/TPN1170A
& EMERGENCY POWER KIT
MODEL TPN1141A

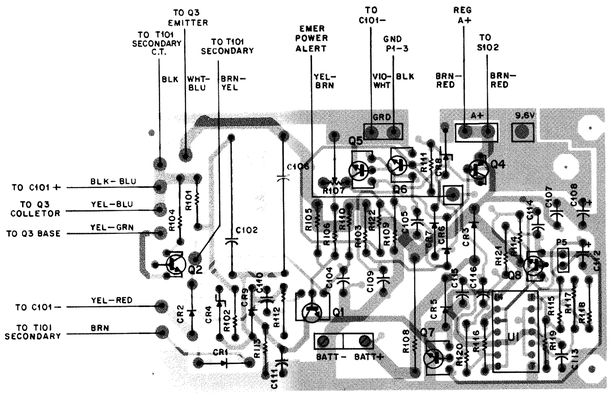

SOLDER SIDE ● BD−CEPS−47300−0

COMPONENT SIDE ● BD−CEPS−47301−0

OL−DEPS−47302−0

SHOWN FROM SOLDER SIDE

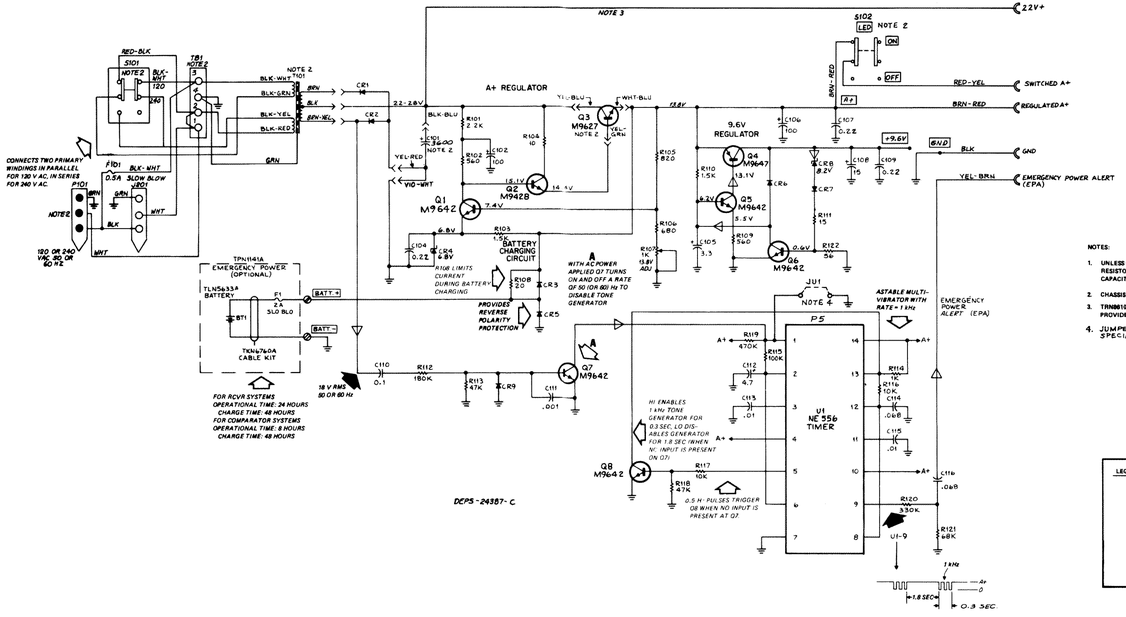

NOTES:

1. UNLESS OTHERWISE NOTED: RESISTOR VALUES ARE IN OHMS. CAPACITOR VALUES ARE IN MICROFARADS.
2. CHASSIS MOUNTED COMPONENT.
3. TRN8810 CABLE KIT CONNECTED AT C101 PROVIDES 22 V OUTPUT ON TPN1170A ONLY.
4. JUMPER JU1 USED FOR SPECIAL APPLICATION ONLY.

LEGEND

- THEORY OF OPERATION DATA
- SIGNAL FLOW
- MAINTENANCE DATA

FUNCTION

TPN1153A/TPN1170A provides dc operating voltages for equipment with which it is used. TPN1141A provides emergency battery operation in case of ac power failure.

parts list

TRN6297B Power Supply Board — PL-11454-O

REFERENCE SYMBOL	MOTOROLA PART NO.	DESCRIPTION
		capacitor, fixed: uF ± 5% 63V unless otherwise stated
C102	2382077C01	100 -10 + 50% 35V
C104	0811051A15	0.22
C105	2311054H02	3.3 ± 10% 25V
C106	2382077C01	100 -10 + 50% 35V
C107	0811051A15	0.22
C108	2311054H10	15 ± 10% 25V
C109	0811051A15	0.22
C110	0811051A13	0.1
C111	2111015D13	.001 ± 10% 100V
C112	2311054H04	4.7 ± 10% 25V
C113	0811051A07	.01
C114	0811051A12	.068
C115	0811051A07	.01
C116	0811051A12	.068
		diode: (see note)
CR1 thru 3	4882525G14	silicon
CR4	4882256C02	Zener: 6.8V
CR5	4882466H13	silicon
CR6,7	4883654H01	silicon
CR8	4882256C16	Zener: 8.2V
CR9	4883654H01	silicon
		jumper:
JU1	2810773A01	male: 2-contact
		connector:
P5	3183458P06	terminal block: 2-position
		transistor: (see note)
Q1	4800869642	NPN type M9642
Q2	4800869428	NPN type M9428
Q4	4800869647	PNP type M9647
Q5 thru 8	4800869642	NPN type M9642
		resistor, fixed: ± 5% 1/4W unless otherwise stated
R101	0611009A57	2.2k
R102	0611009A43	560
R103	0611009A53	1.5k
R104	0611045A01	10 1/2W
R105	0611009A47	820
R106	0611009A45	680
R107	1884248R05	var 1k ± 20% 1/2W
R108	1782177B07	20 5W
R109	0611009A43	560
R110	0611009A53	1.5k
R111	0611009A05	15
R112	0611009B04	180k
R113	0611009A89	47k
R114	0611009A49	1k
R115	0611009A97	100k
R116,117	0611009A73	10k
R118	0611009A89	47k
R119	0611009B14	470k
R120	0611009B10	330k
R121	0611009A93	68k
R122	0611009A19	56
		integrated circuit: (see note)
U1	5184320A85	timer
		non-referenced items
	0200001365	NUT, hex: 4-40 × /4 × 3/32; for Q4
	0300001413	SCREW, machine: 4-40 × 5/16; for Q4
	5484497M29	LABEL

TKN6760A Battery Cable — PL-3472-C

REFERENCE SYMBOL	MOTOROLA PART NO.	DESCRIPTION
		fuse:
F1	65-804908	2 amp; 250 V; slow-blow type
		non-referenced items
	41-82885A01	SPRING, fuse
	14-82882A01	INSULATOR, fuseholder
	14-82883A01	INSULATOR, fuseholder cap
	29-00859118	LUG, crimp
	29-84078B01	LUG, spade; 2 req'd.
	42-82884A01	CLIP, fuse; 2 req'd.
	39-82915N01	CONTACT, male

TLN5633A Battery — PL-3473-A

REFERENCE SYMBOL	MOTOROLA PART NO.	DESCRIPTION
BT1	60-84346F02	BATTERY (gelsel)
		non-referenced item
	54-84463F01	LABEL, battery

TRN8610A Cable Kit — PL-6468-A

REFERENCE SYMBOL	MOTOROLA PART NO.	DESCRIPTION
	2983883C02	LUG, crimp
	4210217A02	STRAP, tie: .091 × 3.62; 2 used

TP6098A Chassis & Hardware Kit — PL-6076-A

REFERENCE SYMBOL	MOTOROLA PART NO.	DESCRIPTION
		capacitor, fixed:
C101	23-83093G23	3600 uF +150-10%; 35 V
		fuse, cartridge:
F101	65-475395	0.5A; 125 V; slow blow type
		connector, receptacle:
J201		includes:
	9-83175L01	INSULATOR, connector
	29-84151L01	TERMINAL, wire: female; 3 used
		connector, plug:
P101		includes:
	28-83176L01	INSULATOR, connector
	29-84150L01	TERMINAL, wire: male; 3 used
		transistor: (see note)
Q3	48-869627	NPN; type M9627
		switch, slide:
S101	40-84241G03	dpdt
S102	40-83204B01	dpdt
		transformer:
T101	25-83043L01	pri. #1 BLK-WHT, BLK-GRN; res. 28 ohms pri. #2 BLK-YEL, BLK-RED; res. 31 ohms sec. BRN, BRN-YEL w/BLK center tap; res. 1.0 ohms total
		board, terminal:
TB1	31-121255	4 lug terminals
		non-referenced items
	1-80781B63	HEAT SINK ASSEMBLY includes:
	26-84112K01	HEAT SINK
	9-82673A01	SOCKET, transistor (Q3)
	4-844093	WASHER, shoulder: 2 used
	29-847854	LUG, slotted-tongue; 3 used
	30-84110A01	CABLE, 3-conductor; 20" used
	9-82083C03	RECEPTACLE, fuse (F101)
	5-10277A18	GROMMET, plastic
	14-865854	INSULATOR, transistor (Q3)
	29-83883C02	LUG, solderless; 4 used
	37-12706	GROMMET, rubber
	42-10217A02	STRAP, tie; nylon: 7 used
	42-10219A48	RETAINER, "E" ring
	2-119913	NUT, hex: 8-32 × 11/32"; 4 used
	3-136253	SCREW, locking: 6-32 × 5/8"; 2 used
	3-134168	SCREW, tapping: 4-40 × 1/4"; w/lockwasher; 4 used
	3-136934	SCREW, tapping: 6-32 × 3/8"; w/lockwasher; 2 used
	3-83343L01	SCREW, captive

note: For optimum performance, diodes, transistors, and integrated circuits must be ordered by Motorola part numbers.

MOTOROLA INC.
Communications Sector

instruction manual revision

(Replaces SMR–5793)

GENERAL:

This revision outlines changes that have occurred since the printing of your instruction manual. Use this information to correct your manual.

INSTRUCTION MANUAL AFFECTED:

→ 68P81039E50–A ..... *SPECTRA TAC*
Total Area Coverage Comparator
Reference Manual

REVISION DETAILS:

This revision details changes that affect the above–referenced manual as result of using the **TRN6091C** Signal Quality Module.

(1) DESCRIPTION SECTION (68P81039E42–A)

Paragraph 4.3.1 Signal Quality Module TRN6091C

In the fourth line of this paragraph, change Q9 to read Q12.

Paragraph 4.3.1.1 Comparator Voting

In the last line of the second paragraph, change Q17 to read Q13.

Paragraph 4.3.1.2 Status Tone Detection

The text should read as follows:

"Output from the AGC circuit is applied to the status tone decoder (U4). The frequency of the incoming signal is compared with the internal oscillator frequency of the status tone decoder (adjusted by R36). If the frequencies match, pin 6 of the status tone decoder goes high, turning Q7 off and disabling the 13 dBm attenuator and the line failure timer. When Q7 turns off, it also turns Q8 off, disabling the activity checker and signal quality detector."

"***When the STATUS TONE is NOT detected***, Q7 and Q8 enable the comparator switch, turn on the UNSQUELCH INDICATE LED, and provide a low at the UNSQUELCHED INDICATE output to the command module. "

Paragraph 4.3.1.3 Line Failure Detection

The text should be read as follows:

"The AGC output also goes to the activity checker. Audio signals from the AGC output will produce a low at the activity checker output. As long as the activity checker output is low, the activity timer output remains high. In the absence of audio at the activity checker, the activity checker output goes high. If the activity timer

is not reset by another low within 10 milliseconds, the output of the timer goes low, activating the line failure timer."

"If the line failure timer is not reset by a high output at pin 5 of the activity timer, the line failure timer output goes low after a specified time as determined by the jumper JU4 position. A low at the line failure timer output will turn on the failed LED, disable the status tone output switches (Q7 & Q8), disable the noise floor latch, disable the vote lock switch, and provide a low to the failed bus."

In Figure 2 (Noise Floor)

Add the following phrase under the third line: TRN6091C (Pin 7 of U1).

Paragraph 4.3.1.4 Voted Audio

Change U4 to read U3.

(2) INSTALLATION SECTION (68P81039E43–O)

Paragraph 6. Signal Quality Module Installation

Modify the Chart to read as follows:

MODULE VERSION	SYSTEM	
	0 dB	–13 dB
TRN6091B	JU4 IN	JU4 OUT
TRN6091C	JU1 IN	JU1 OUT

Paragraph 8. UNIT JUMPER ARRANGEMENT

Add the following subparagraph under subparagraph 8.1

8.2 TRN6091C SIGNAL QUALITY MODULE

JU1 Normally out (–13 dB), in for 0 dB status tone operation.

JU2 Normally in, out for adjusting status tone frequency.

JU3 Normally out, in for adjusting status tone frequency.

JU4 Normally in, out for 1 minute of line failure delay.

JU5 Normally out, in to disable line failure circuitry.

(3) MAINTENANCE SECTION (68P81039E44–O)

Add the following adjustment procedure:

6.6 TRN6091C SIGNAL QUALITY MODULE STATUS TONE (R36) ADJUSTMENT

Step 1. Remove the signal quality module from the comparator chassis and install it on an extender card. Power up the unit.

Step 2. Reposition the shorting plug from JU2 to JU3.

Step 3. Connect a frequency counter to the top pin of JU2 (pin farthest from JU3).

Step 4. Adjust potentiometer R36 until a 2175 Hz ± 1 Hz indication is obtained on the frequency counter.

Step 5. Reinstall the shorting plug on JU2.

Step 6. Remove the signal quality module from the extender card and install it in the comparator chassis.

NOTE 1: For adjustment of the 1950 Hz status tone, repeat Steps 1 through 6 and adjust R36 to obtain a 1950 Hz status tone instead of a 2175 Hz tone, as specified in Step 4.

NOTE 2: Because of special test equipment and test procedures used, adjustment of potentiometer R110 is very critical; hence this adjustment is made at the factory.

Paragraph 7. SERVICE AIDS

Add the following paragraph after paragraph 7.2

7.3 FREQUENCY COUNTER

Used for measuring the internal oscillator frequency on the signal quality module.

(4) SIGNAL QUALITY MODULE SECTION (68P81033E03-E)

(a) Delete the Troubleshooting Chart on the second page of this section.

(b) Add the following table to this section. Please note that this information applies to both the B and C versions of the module.

NOTE: All references to audio levels are relative to test tone level at the SQM when the receiver is unsquelched with 1 mV of rf and 1 kHz tone modulation at 5 kHz deviation.

CONDITION	RECEIVER FUNCTION	SQM FUNCTION
Receiver Squelched	Sends status tone to the line at -13 dBm.	Status tone has been detected which (1) disables the 13 dB attenuator (2) enables the AGC to set up on status tone level (3) disables activity checker.
Receiver Squelched to Unsquelched Transition	Removes the status tone from the line and waits for 15 ms to ensure loss of status tone has been detected.	Status tone detector detects loss of status tone which: (1) disables AGC (2) enables 13 dB attenuator (3) enables activity checker
Receiver Squelched to Unsquelched Transition	Applies received audio to the line at 0 dBm	Activity checker detects audio presence which: (1) disables status tone detector If this SQM votes it: (2) enables the audio gates to pass the audio to the command line (3) disables the status tone notch.
Receiver Unsquelched	Sends received audio at 0 dBm	Activity checker: (1) detects audio loss of audio greater than 5 ms which: (a) enables status tone detector (b) enables status tone notch (2) detects audio presence which: (a) disables status tone detector to prevent falsing (b) disables status tone notch, and so forth.
Receiver Unsquelched to Squelched Transition	Mutes received audio and waits 15 ms to ensure that audio loss is detected	Activity checker detects loss of audio which: (1) enables status tone detector (2) enables status tone notch
Receiver Unsquelched to Squelched Transition	Applies status tone to line at -13 dBm	Status tone detector detects status tone which: (1) disables 13 dB attenuator (2) enables AGC which sets up on status tone level (3) disables activity checker

ATTACHMENT

SIGNAL QUALITY MODULE SCHEMATIC DIAGRAM

MODEL TRN6091C

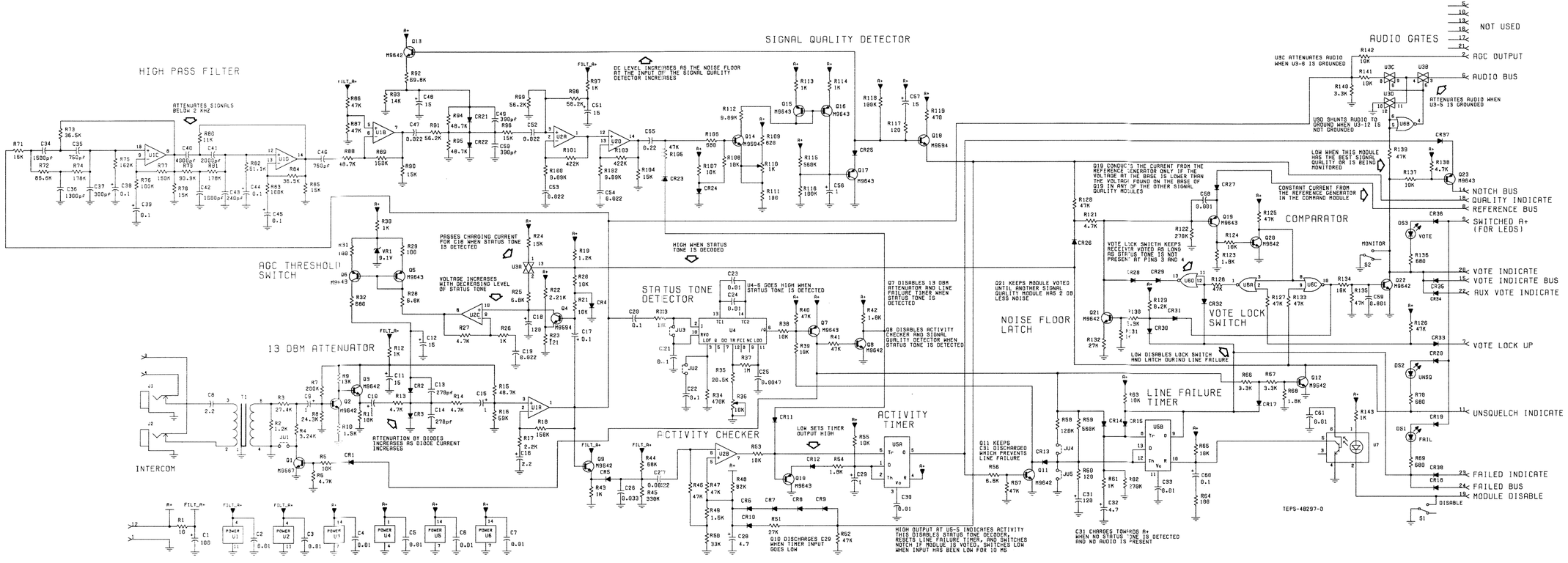

FUNCTION

This module determines the signal noise level and compares it to the noise level measured on other receiver lines. It also routes the receiver audio to the command module when the receiver is voted. It detects receiver line failures.

SIGNAL QUALITY MODULE
CIRCUIT BOARD DETAIL
MODEL TRN6091A

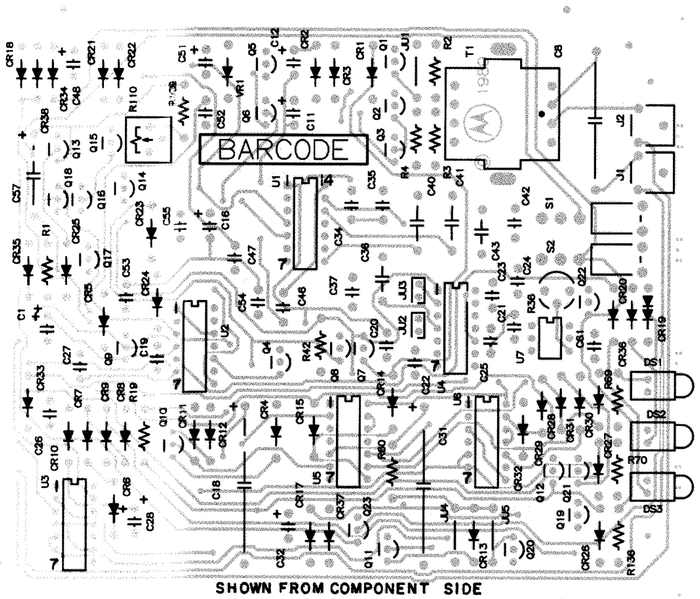

SHOWN FROM COMPONENT SIDE

COMPONENT SIDE CEPS-48293-0
OVERLAY CEPS-48295-0

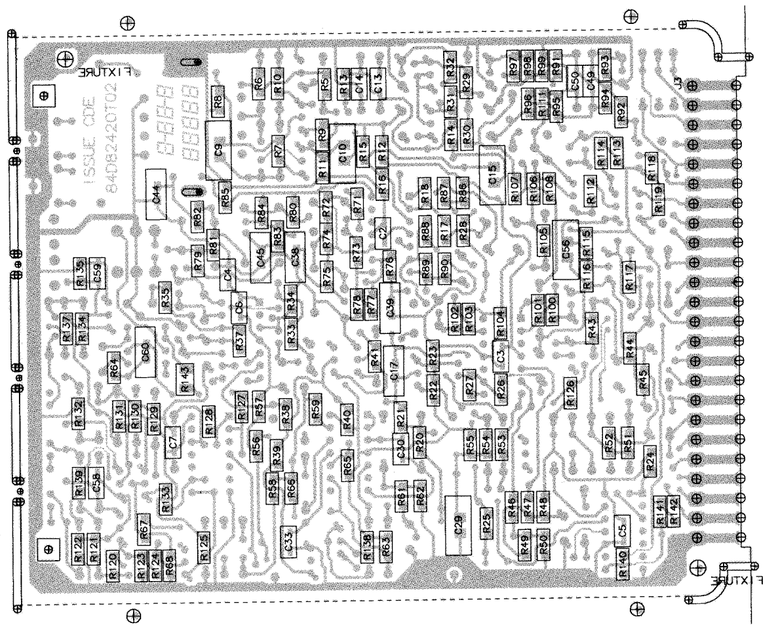

SHOWN FROM SOLDER SIDE

CHIP SIDE BEPS-48296-0
SOLDER SIDE BEPS-48294-0

SIGNAL QUALITY MODULE PARTS LIST
MODEL TRN6091C

REF. SYMBOL	PART NO.	DESCRIPTION
		capacitor, fixed: uF ±5%; 50V unless otherwise stated
C1	2311019B46	100 ±20%; 25V
C2 thru 7	2113741B45	.01
C8	0882045F09	2.2 ±10%; 250V
C9,10	2311049A08	1 ±10%; 35
C11,12	2311054H10	15 ±10%; 25V
C13,14	2113740B59	270pF
C15	2311049A08	1 ±10%; 35V
C16	2311054L10	2.2 ±10%
C17	2311049A01	0.1 ±10%; 35V
C18	2383185D01	120 ±10%; 15V
C19	0811051A09	.022; 63V
C23,24	2183162H44	1000pF
C25	0811017A06	.0047
C26	0811051A10	.033; 63V
C27	0811017A03	.0022
C28	2311054H04	4.7 ±10%; 25V
C29	2311049A08	1 ±10%; 35V
C30	2113741B45	10000pF
C31	2383185D01	120 ±10%; 15V
C32	2311054H04	4.7 ±10%; 25V
C33	2113741B45	10000pF
C34	2184426B73	1500pF ±2%; 100V
C35	2184534B08	750pF ±2%; 300V
C36	2100864736	1300pF; 500V
C37	2183003G05	300pF ±2%; 100V
C38,39	2311049A01	0.1 ±10%; 35V
C40	2100863396	4000pF ±1%; 500V
C41	2100863293	2000pF ±2%; 500V
C42	2184426B04	1000pF; 100V
C43	2100840048	240pF; 500V
C44,45	2311049A01	0.1 ±10%; 35V
C46	2184534B08	750pF ±2%; 300V
C47	0811051A09	.022; 63V
C48	2311054H10	15 ±10%; 25V
C49,50	2113740B63	390pF
C51	2311054H10	15 ±10%; 25V
C52 thru 54	0811051A09	.022; 63V
C55	0811051A15	0.22; 63V
C56	2311049A08	1 ±10%; 35V
C57	2311999A30	15; 25V
C58,59	2113741B21	1000pF
C60	2311049A01	0.1 ±10%; 35V
C61	2111015A07	10000pF +80-20%; 100V
		diode: (see note)
CR1 thru 15	4883654H01	silicon
CR17 thru 20	4883654H01	silicon
CR21,22	4884616A04	hot carrier
CR23,24	4883654H01	silicon
CR25	4884616A01	hot carrier
CR26 thru 38	4883654H01	silicon

REF. SYMBOL	PART NO.	DESCRIPTION (PL-11759-0)
		light emitting diode: (see note)
DS1	4888245C24	red
DS2	4888245C23	yellow
DS3	4888245C22	green
		connector:
J1,2	0983633N01	receptacle, phone jack
J3	0982028T01	receptacle, 12-contact (2 used)
		jumper:
JU2,3	2880001R02	plug: 2-contact
JU4	0611009B23	resistor, 0 ohm
		transistor: (see note)
Q1	4800869567	NPN
Q2,3	4800869642	NPN
Q4	4800869594	NPN
Q5 thru 7	4800869643	PNP
Q8,9	4800869642	NPN
Q10	4800869643	PNP
Q11 thru 13	4800869642	NPN
Q14	4800869594	NPN
Q15 thru 17	4800869643	PNP
Q18	4800869594	NPN
Q19	4800869643	PNP
Q20 thru 22	4800869642	NPN
Q23	4800869643	PNP
		resistor, fixed: ±5%; 1/8W unless otherwise stated
R1	0611009A01	10; 1/4W
R2	0611009A51	1200; 1/4W
R3	0611049D34	27.4K ±1%; 1/4W
R4	0611049C44	3240 ±1%; 1/4W
R5	0611077A98	10K
R6	0611077A90	4700
R7	0611077H18	200K ±1%
R8	0611077G29	24.3K ±1%
R9	0611077B02	13K
R10	0611077A78	1500
R11	0611077A98	10K
R12	0611077A74	1000
R13,14	0611077A90	4700
R15	0611077G58	48.7K ±1%
R16	0611077G66	59.0K ±1%
R17	0611077A82	2200
R18	0611077B27	150K
R19	0611009A51	1200; 1/4W
R20,21	0611077A98	10K
R22	0611077F28	2210 ±1%
R23	0611077E08	121 ±1%
R24	0611077B03	15K
R25	0611077A94	6800
R26	0611077A74	1000
R27	0611077A90	4700
R28	0611077A94	6800
R29	0611077D97	100 ±1%
R30	0611077A74	1000
R31	0611077D97	100 ±1%
R32	0611077A70	680
R33	0611077A74	1000

REF. SYMBOL	PART NO.	DESCRIPTION (PL-11759-0)
		resistor, fixed: ±5%; 1/8W (cont.) unless otherwise stated
R34	0611077B39	470K
R35	0611077G22	20.5K ±1%
R36	1882159K11	variable:10K ±10%; 1/2W
R37	0611077B47	1 meg
R38,39	0611077A98	10K
R40,41	0611077B15	47K
R42	0611009A55	1800; 1/4W
R43	0611077A74	1000
R44	0611077B19	68K
R45	0611077B35	330K
R46,47	0611077B15	47K
R48	0611077B21	82K
R49	0611077A78	1500
R50	0611077B11	33K
R51	0611077B09	27K
R52	0611077B15	47K
R53	0611077A98	10K
R54	0611077A80	1800
R55	0611077A98	10K
R56	0611077A94	6800
R57	0611077B15	47K
R58	0611077B25	120K
R59	0611077B41	560K
R60	0611009A27	120; 1/4W
R61	0611077A74	1000
R62	0611077B33	270K
R63	0611077A98	10K
R64	0611077A50	100
R65	0611077A98	10K
R66,67	0611077A86	3300
R68	0611077A80	1800
R69,70	0611009A45	680; 1/4W
R71	0611077G09	15.0K ±1%
R72	0611077G82	86.6K ±1%
R73	0611077G46	36.5K ±1%
R74	0611077H13	178K ±1%
R75	0611077H09	162K ±1%
R76	0611077G88	100K ±1%
R77	0611077H06	150K ±1%
R78	0611077B03	15K
R79	0611077G84	90.9K ±1%
R80	0611077A99	11K
R81	0611077H13	178K ±1%
R82	0611077G60	51.1K ±1%
R83	0611077G88	100K ±1%
R84	0611077G46	36.5K ±1%
R85	0611077B03	15K
R86,87	0611077B15	47K
R88	0611077G58	48.7K ±1%
R89	0611077H06	150K ±1%
R90	0611077B03	15K
R91	0611077G64	56.2K ±1%
R92	0611077G73	69.8K ±1%
R93	0611077G06	14.0K ±1%
R94	0611077G58	48.7K ±1%

REF. SYMBOL	PART NO.	DESCRIPTION (PL-11759-0)
		resistor, fixed: ±5%; 1/8W (cont.) unless otherwise stated
R95	0611077G58	48.7K ±1%
R96	0611077G09	15.0K ±1%
R97	0611077A74	1000
R98,99	0611077G64	56.2K ±1%
R100	0611077F87	9090 ±1%
R101	0611077H49	422K ±1%
R102	0611077F87	9090 ±1%
R103	0611077H49	422K ±1%
R104	0611077B03	15K
R105	0611077B15	47K
R106	0611077A70	680
R107,108	0611077A98	10K
R109	0611009A44	620; 1/4W
R110	1882159K05	variable: 1K ±10%; 1/2W
R111	0611077A50	100
R112	0611077F87	9090 ±1%
R113,114	0611077E94	1000 ±1%
R115	0611077B41	560K
R116	0611077B23	100K
R117	0611077A52	120
R118	0611077B23	100K
R119	0611077A66	470
R120	0611077B15	47K
R121	0611077A90	4700
R122	0611077B33	270K
R123	0611077A80	1800
R124	0611077A98	10K
R125 thru 128	0611077B15	47K
R129	0611077A98	8200
R130	0611077A86	3300
R131	0611077A74	1000
R132	0611077B09	27K
R133	0611077B15	47K
R134	0611077A98	10K
R135	0611077B15	47K
R136	0611009A45	680; 1/4W
R137	0611077A98	10K
R138	0611077A90	4700
R139	0611077B15	47K
R140	0611077A86	3300
R141,142	0611077A98	10K
R143	0611072A49	1000; 1/4W
		switch, toggle:
S1,2	4083980R08	spdt
		transformer:
T1	2584202A02	line driver
		transistor: (see note)
U1,2	5184320A80	Quad Operational Amplifier
U3	5184887K04	Bilateral Quad Switch
U4	5183222M51	Monolithic Phase Locker Loop
U5	5184320A85	Dual Timer
U6	5182764K02	Quad 2-Input NOR Gate
U7	5184339T01	Optocoupler

REF. SYMBOL	PART NO.	DESCRIPTION (PL-11759-0)
		voltage regulator: (see note)
VR1	4882256C38	9.1V
		non-referenced items:
	0384256M01	SCREW, tapping (3 used)
	4583993M01	LEVER, pivot (2 used)
	5483865R01	LABEL, bar code (white)
	5484246T01	LABEL, bar code
	6483259T01	PANEL, module
	0984728L01	SHORT JUMPER (used with JU2)

NOTE: For optimum performance diodes, transistors and integrated circuits must be ordered by Motorola part numbers.

MOTOROLA

instruction manual revision

GENERAL:

This revision outlines changes that have occurred since the printing of your instruction manual. Use this information to correct your manual.

INSTRUCTION MANUAL AFFECTED:

68P81033E20–A	*PULSAR* Tone Remote Adapter for IMTS Base Stations
688P1033E25–C	*PULSAR* Tone Remote Control Interface Unit
→ **68P81039E50–A**	*Spectra–TAC* Total Area Coverage Comparator
68P81081E60–B	Trunked Radio System Dual Path Simulcast Equipment

REVISION DETAILS:

1. Capacitor C107 is changed on the TRN6297B Power Supply Board from part no. 0811051A15, 0.22μF to part no. 2311013F03, 0.15μF to stabilize the power supply output at high line level input.

   - For all affected manuals, make this change in the TRN6279B parts list and schematic diagram appearing in manual section 68P81039E36 (Refer to SMR–5684).

MOTOROLA

instruction manual revision

GENERAL:

This revision outlines changes that have occurred since the printing of your instruction manual. Use this information to correct your manual.

INSTRUCTION MANUAL AFFECTED:

68P81039E50–A *Spectra–TAC* Total Area Coverage Comparator

REVISION DETAILS:

1. Resistor R58 is changed on the TRN6091C Signal Quality Module from part no. 0611077B25, 120k to part no. 0611077B28, 160k to increase the line failure time–out rate to approximately 14.9 seconds.

   - Make this change in the TRN6091C parts list and schematic diagram appearing in manual section 68P81033E03 (Refer to SMR–5830 in the affected instruction manual).

MOTOROLA

instruction manual revision

GENERAL:

This revision outlines changes that have occurred since the printing of your instruction manual. Use this information to correct your manual.

INSTRUCTION MANUAL AFFECTED:

→ **68P81039E50-A** *Spectra-TAC* Total Area Coverage Comparator

REVISION DETAILS:

1. Refer to the TRN6095A Tone Keying Module Instruction Section 68P81026E61-E and make the following changes:

   - On the schematic diagram, add capacitor C39 (.01μF ±5%; 50V, part no. 0811017A08). One end connects to the base of Q3 and the other end connects to ground. In actuality, C39 is connected directly across R15 on the circuit board detail. Add C39 to Parts List PL-3576-A also. This change is required in order to prevent the high Level Guard Tone and Function Tone randomly occuring in the wrong sequence.

2. Refer to the TRN6091C Signal Quality Module Instruction Section 68P81033E03 (attached to SMR-5830 in your instruction manual), and make the following changes:

   - On the schematic diagram, change the value of R37 from 1M to 3.3M (part no. 0611079C04, 10%; 1/8W). Changing the value of R37 elininates falsing (squelching and down voting) on 2175Hz voice components. Also, add capacitors C20 thru C22 (part no. 0811051A13 .01μF ±5%; 63V) to parts list PL-11759-O as they were inadvertently left out.

MOTOROLA

instruction manual revision

GENERAL:

This revision outlines changes that have occurred since the printing of your instruction manual. Use this information to correct your manual.

INSTRUCTION MANUAL AFFECTED:

68P81039E50–A *Spectra–TAC* Total Area Coverage Comparator

REVISION DETAILS:

1. Refer to Comparator Interconnect Chassis section 68P81026E57–B in your manual. Add the following information to page 3 (PEPS–21194–B):

   - If a TRN6091C Signal Quality Module is used in position 7 and a TRN6100A Tone Priority Module is used in position 8 (of the comparator interconnect board), pins 21 and 22 of positions 7 and 8 are isolated from one another via plating cuts at position 8.

2. Locate the Secondary Line Driver/Secondary Encoder Module (TRN6101A) instruction section 68P81031E42–C in your instruction manual. Refer to the circuit board detail and note that the reference designators for R18 through R25 are incorrect. In addition, two capacitors had the same designator of C8. The reference designator for one of these capacitors should be C6. These components are located on the far right hand side of the circuit board detail. A corrected circuit board detail is attached to this revision.

ATTACHMENTS:

Secondary Line Driver/Secondary Encoder Module Circuit Board Detail OL–DEPS–20900–C

SECONDARY LINE DRIVER/ ENCODER MODULE

MODEL TRN6101A
REVISED CIRCUIT BOARD DETAIL

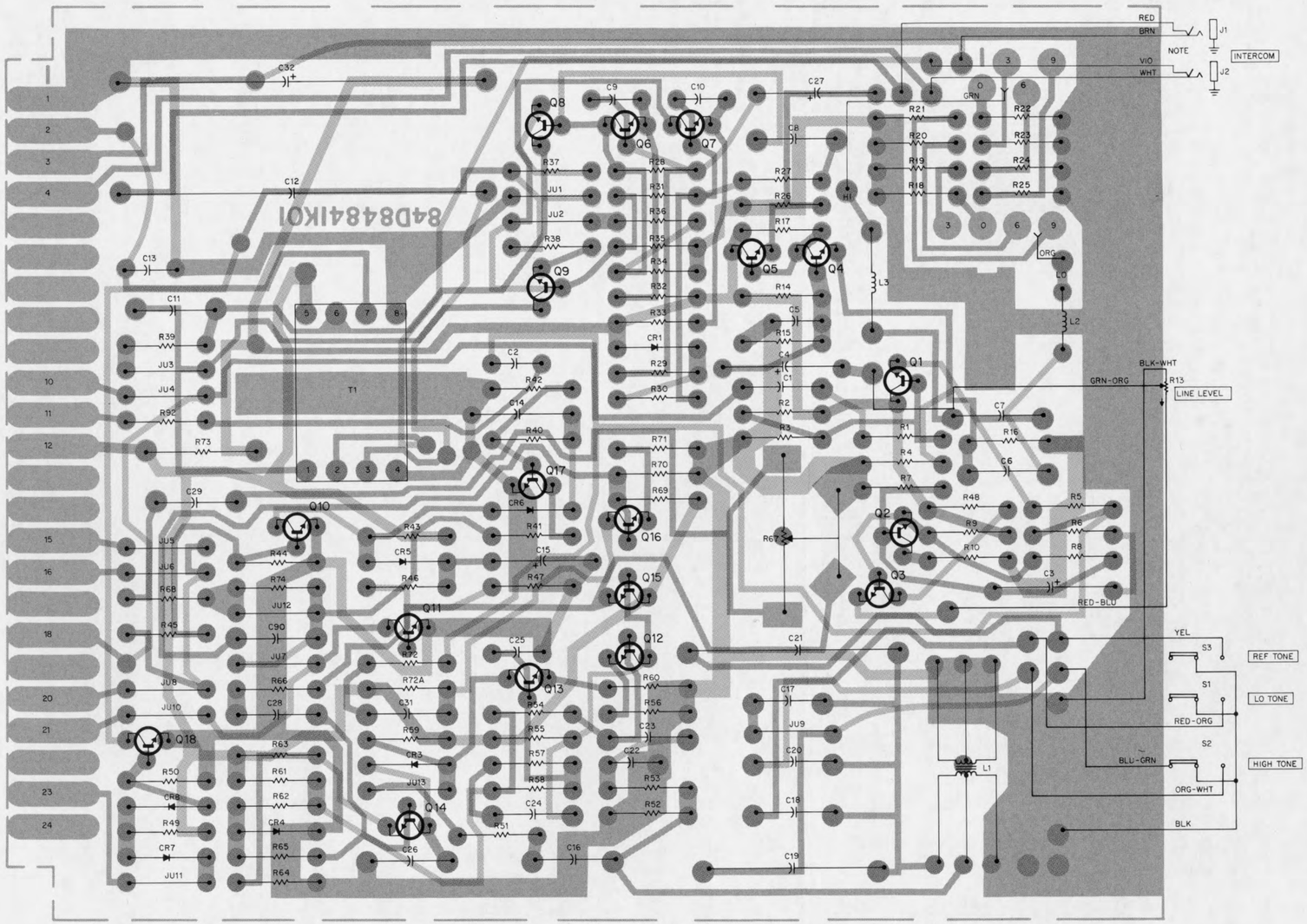

SHOWN FROM SOLDER SIDE

MOTOROLA

instruction manual revision

GENERAL:

This revision outlines changes that have occurred since the printing of your instruction manual. Use this information to correct your manual.

INSTRUCTION MANUAL AFFECTED:

68P81039E50–A *Spectra–TAC* Total Area Coverage Comparator

REVISION DETAILS:

1. Refer to instruction manual revision SMR–5684 included with the affected instruction manual listed above and find the TPN1153A Power Supply section (68P81039E36–C) attached to it. On sheet 2 of section 68P81039E36–C, make the following changes.

   - In the TPN6098A Chassis & Hardware Kit parts list (PL–6076–A), change the part number and value of C101 to 4700 µF +50–10%; 40V(Motorola part number 2384818A05). Make this change to the schematic diagram also.

   - In the same parts list under the "non–referenced items" section add the following:

     0410057A26 nylon shoulder washer (1)
     0410058B52 white flat nylon shoulder washer, .032 (1)

2. Locate the TRN6093A Command Module instruction section 68P81026E59–F and make the following change to parts list PL–3634–C. Change the value of R14 from 4.7k to 8.2k (part number 0611009A71). Make this change to the schematic diagram also.

   Locate Note 4 on the schematic diagram and change the reference to "INPUT" to read as follows:

   INPUT = –19dBm (85 mV RMS) in a system with 3kHz deviation, or –15dBm (137 mV RMS) in a system with 5kHz deviation.

3. Locate the TRN6095A Command Module instruction section 68P81026E61–E and make the following change to parts list PL–3576–A. Change the value of R37 from 680 Ohms to 1k ±5%; ¼W (part number 0611009A49). Additionally, a capacitor (C40, .01 µF ±10 %; 50 V) is connected in parallel with R19. Make this change to the schematic diagram also.

MOTOROLA

instruction manual revision

(Supercedes SMR–6216)

GENERAL:

This revision outlines changes that have occurred since the printing of your instruction manual. Use this information to correct your manual.

INSTRUCTION MANUAL AFFECTED:

→ **68P81039E50–A** *Spectra–TAC* Total Area Coverage Comparator Reference Manual

REVISION DETAILS:

1. Refer to the TRN6091B (p/o TLN1718B) Signal Quality Module section 68P81033E03–E and make the following changes to parts list PL–5045–E.
   - Capacitor C23 (p/n 21–864736, 1300pF ±5%; 500V) is replaced by part number 21–82094Y01 (1300pF, ±1%; 500V).
   - The part number for capacitor C29 is changed to 21–82537B54 (1000pF ±1%; 100V).
2. Refer to the TRN6091C Signal Quality Module section 68P81033E03 and make the following changes to parts list PL–11759–O.
   - Capacitor C36 (p/n 21–864736, 1300pF ±5%; 500V) is replaced by part number 21–82094Y01 (1300pF, ±1%; 500V).
   - The part number for capacitor C42 is changed to 21–82537B54 (1000pF ±1%; 100V).

MOTOROLA INC.
Communications Group

SPECTRA TAC

TOTAL AREA COVERAGE COMPARATOR

CONTENTS

SECTION *NUMBER*

technical writing services
1301 E. Algonquin Road, Schaumburg, Il. 60196

68P81039E50-A
5/30/80-NPC

PERFORMANCE SPECIFICATIONS

POWER SUPPLY	Input: 120/240 V ac, 50-60 Hz Output: 13.8 V
INPUT LINE IMPEDANCE	600 ohms, balanced
INPUT LINE SENSITIVITY	-25 dBm at 1000 Hz min, 0 dBm max
OUTPUT LINE IMPEDANCE	600 ohms, balanced
OUTPUT AUDIO LEVEL	Adjustable, + 11 dBm maximum
OUTPUT AUDIO RESPONSE	± 1 dB from 300 to 3000 Hz with voice transmission
OUTPUT AUDIO DISTORTION	Less than 3% at 1000 Hz
UNSELECTED CHANNEL REJECTION	-50 dB
TIMING	Initial selection within 20 milliseconds. Change of selection in less than 1 millisecond. Dropout delay adjustable, 10 seconds maximum.
CAPACITY	8 remote site inputs per chassis, expandable to three chassis maximum.
CHASSIS DIMENSIONS	5-1/4" x 19" rack panel.
ENCLOSURES	Outdoor upright cabinet holds up to six comparator units; indoor "Compa-Station" cabinet holds up to four.
SYSTEM ATTACK TIME	Carrier Squelch: Audio is present at the output of the comparator within 60 milliseconds after receipt of a 20 dB quieting signal at the receiver. Coded Squelch: Audio is present at the output of the comparator within 20 milliseconds after operation of the receiver's "Private-Line" squelch switching circuit.

MOTOROLA

MODEL CHART

FOR

"SPECTRA TAC" COMPARATORS

USED IN

SATELLITE RECEIVER VOTING SYSTEMS

MODEL	DESCRIPTION
T1786B	COMPARATOR, SINGLE FREQ., 8 UNITS MAXIMUM
T1787B	COMPARATOR, SINGLE FREQ., 16 UNITS MAXIMUM
T1788B	COMPARATOR, SINGLE FREQ., 24 UNITS MAXIMUM
T1796B	COMPARATOR, 2-FREQ., 8 UNITS MAXIMUM PER FREQ.
T1797B	COMPARATOR, 3-FREQ., 8 UNITS MAXIMUM PER FREQ.
T1798B	COMPARATOR, 4-FREQ., 8 UNITS MAXIMUM PER FREQ.

CODE:

X = ONE SUPPLIED

2 = NUMBER INDICATES QUANTITY SUPPLIED

╱ = ONE REQUIRED PER RECEIVER UNIT (ORDERED SEPARATELY QUANTITY USED DEPENDS ON SYSTEM REQUIREMENTS)

O = OPTIONAL KIT (USE DEPENDS ON SYSTEM REQUIREMENTS)

T1786B	T1787B	T1788B	T1796B	T1797B	T1798B	ITEM	DESCRIPTION	OPTION
X	X	X	X	X	X	THN6141A	CABINET, 30-INCH	
X	2	3	2	3	4	TRN6448A	CABINET, HARDWARE KIT	
	X	2				TKN6796A	CABLE, CHASSIS INTERCONNECT	
X	2	3	2	3	4	TLN1726A	COMPARATOR INTERCONNECT CHASSIS	
X	2	3	2	3	4	TPN1153A	POWER SUPPLY	
╱	╱	╱	╱	╱	╱	TLN1718B	SIGNAL QUALITY KIT	C178
X	X	X	X	X	X	TRN6081A	TUNING TOOL	
X	X	X	2	3	4	TRN6093A	COMMAND MODULE	
X	X	X	X	X	X	TLN5960A	LINE CORD KIT	
O	O	O	O	O	O	TRN6095A	TONE KEYING KIT	P/O C175A
O	O	O	O	O	O	KLN6210A	"VIBRASENDER" RESONANT REED	P/O C175A
O	O	O	O	O	O	TRN6097A	DC KEYING KIT	C176A
O	O	O	O	O	O	TPN1141A	EMERGENCY POWER KIT	C28A
O	O	O	O	O	O	TRN6342A	BATTERY MOUNTING BRACKET	
O	O	O	O	O	O	TMN6067A	HANDSET	P/O C192A
O	O	O	O	O	O	TKN6795A	HANDSET CABLE	P/O C192A
O	O	O	O	O	O	TLN4151A	RELAY KIT	
O	O	O	O	O	O	THN6142A	CABINET, 41-INCH	C195A
O	O	O	O	O	O	THN6143A	CABINET, 46-INCH OUTDOOR	C27A
O	O	O	O	O	O	THN6243A	CABINET, 60-INCH	C180A
O	O	O	O	O	O	THN6058A	CABINET, 70-INCH OUTDOOR	C136A
O	O	O	O	O	O	TRN6100A	TONE PRIORITY MODULE	P/O C235A
O	O	O	O	O	O	KLN6209A	"VIBRASPONDER" RESONANT REED	P/O C235A
O	O	O	O	O	O	TRN6101A	SECONDARY LINE DRIVER MODULE	C144A
O	O	O	O	O	O	TRN6102A	CONSOLE INTERFACE KIT	C238A

EPS-26873-O

"SPECTRA TAC" COMPARATOR OPTIONS

OPTION	ADD	DELETE	APPLICABILITY
C27A	THN6143A 46-INCH OUTDOOR CABINET TLN4862A VENTS	THN6141A 30-INCH CABINET	ALL MODELS
C36A	THN6058A 70-INCH OUTDOOR CABINET TLN6892A RAIN SHIELD	THN6141A 30-INCH CABINET	ALL MODELS
C87A	NOTHING	THN6141A 30-INCH CABINET	ALL MODELS
C180A	THN6243A 60-INCH CABINET	THN6147A 30-INCH CABINET	ALL MODELS
C195A	THN6142A 41-INCH CABINET	THN6141A 30-INCH CABINET	ALL MODELS
C28A	TPN1141A EMERGENCY POWER KIT	NOTHING	ALL MODELS
C175A	TRN6095A TONE KEYING MODULE KLN6210A "VIBRASENDER" RESONANT REED	NOTHING	ALL MODELS
C176A	TRN6097A DC KEYING MODULE	NOTHING	ALL MODELS
C178A	TLN1718B SIGNAL QUALITY KIT	NOTHING	ALL MODELS
C192A	TMN6067A HANDSET TKN6795A CABLE KIT	NOTHING	ALL MODELS
C270A	ADD COMPARATOR CONSISTING OF: TLN1726A COMPARATOR CHASSIS TPN1140A POWER SUPPLY TRN6093A COMMAND MODULE TRN6448A HARDWARE KIT	NOTHING	ALL MODELS
	TLN4151A RELAY KIT		TONE OR DC KEYING MODULES OR TONE PRIORITY MODULES
C235A	TRN6100A TONE PRIORITY MODULE TRN6092A SPARK GAP AND GUIDE RAIL KIT KLN6209A "VIBRASPONDER" RESONANT REED	NOTHING	ALL MODELS
C144A	TRN6101A SECONDARY LINE DRIVER MODULE TRN6092A SPARK GAP AND GUIDE RAIL KIT	NOTHING	ALL MODELS
C238A	TRN6102A CONSOLE INTERFACE KIT	NOTHING	ALL MODELS

(Pages v and vi are omitted, due to irrelevancy)

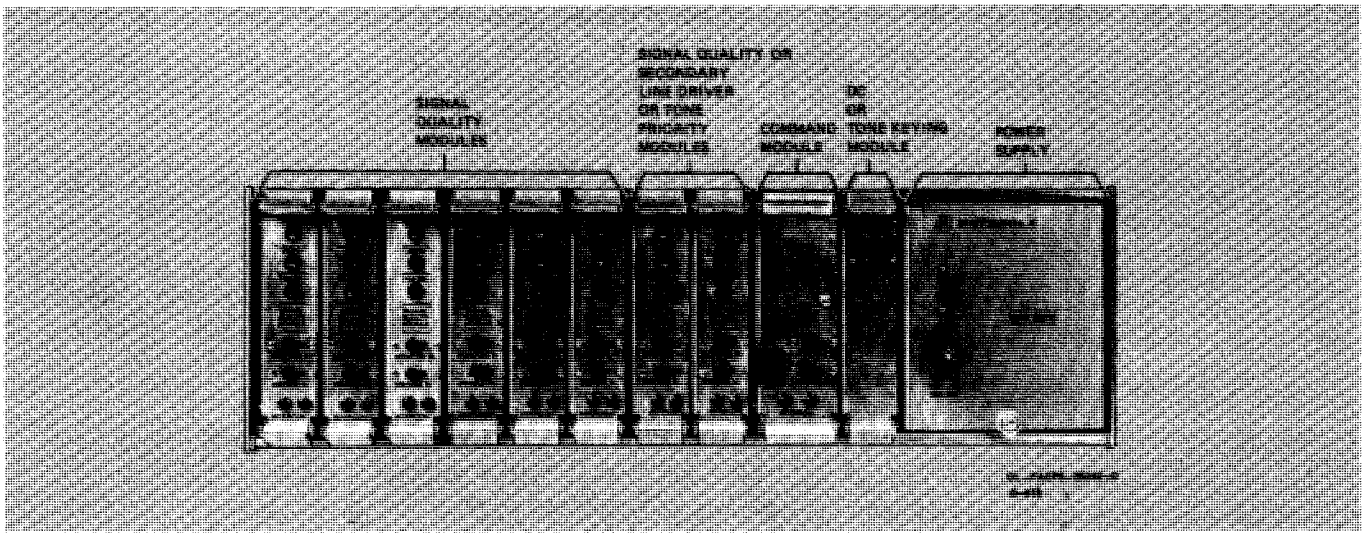

Figure 1. Location of Assemblies

1. INTRODUCTION

The Motorola "Spectra TAC" Total Area Coverage System electronically compares and selects the receiver with the best signal of multiple receivers operating on the same rf frequency over a wide coverage area. The "Spectra TAC" system consists of multiple receiver-encoder units distributed throughout a coverage area and a comparator which determines which receiver has the best signal on the same rf frequency. With the use of multiple receiver-encoders, the "Spectra TAC" system can extend the talk-back range of personal portable and mobile radio units.

By selecting only one receiver-encoder unit, the high noise and phase distortion, which would result if several receiver audio lines were connected in parallel at the monitoring point, are eliminated.

One receiver-encoder unit is required at each given satellite site. The receiver monitors one rf frequency and amplifies the received audio for transmission to the comparator. An encoder generates a status tone for transmission to the comparator when there is no received signal.

The comparator receives the audio and tone signals from multiple receiver-encoder units, which are

operating on the same rf frequency. It compares the signals and selects the receiver-encoder unit with the best audio signal (the generated tone is not used for voting). The audio of the receiver-encoder unit with the best signal is then sent to the dispatcher.

2. PHYSICAL DESCRIPTION

The comparator employs completely transistorized control modules and power supplies. The advantage of the transistor -- low current requirements, reliability, light weight, compact size and low maintenance requirements -- are fully utilized. The comparator cabinets are constructed so that all controls are accessible without interrupting communications.

The comparator cabinets are of an open frame construction covered by a sheet metal outer covering. On indoor "Compa-Station" cabinets, the doors are easily removed. Also, the indoor "Compa-Station" cabinets are capable of holding one to four comparator units. The outdoor, upright cabinets afford protection against all normally encountered elements such as rain, snow, or sleet and are capable of holding from one to eight comparator units.

One entire comparator unit is contained in a single comparator chassis. A card cage capable of holding one keying module, one command module, and up to eight signal quality modules occupies the left side of the chassis. An opening on the right side of the chassis accommodates the power supply.

3. OPTIONAL KEYING KITS

The TRN6095A Tone Keying Kit or the TRN6097A DC Keying Kit can be installed in the comparator to enable the comparator to directly key an associated transmitter within the system.

An optional relay can be added to either keying kit to provide a switchable audio output.

4. FUNCTIONAL DIAGRAM THEORY

(Refer to the Comparator Functional Diagram)

4.1 GENERAL

The comparator chassis consists of two or more input modules, but for the functional diagram description, only one module is shown. The operation of the remaining modules within the comparator chassis is identical to the explanation of the module in the following paragraphs.

The comparator chassis consists of an interconnect board, a signal quality module for each receiver encoder unit used in the system and a command module. The chassis power supply slides into the right side of the chassis and connection is made using four spade lugs. The interconnect board acts as a printed circuit cable kit to interconnect the signal quality modules and command module. The signal quality modules sample the incoming receiver signals and compare their noise level to the noise level of the other receiver inputs. The audio from the selected receiver line is fed to the command module where it is amplified before it is applied to the output line. The process of selecting the best signal is called voting, and the selected line is called the voted line.

Individual module indicators and manual controls are located on the front panel of each signal quality module.

4.2 LOGIC LEVELS

Binary logic circuits have two states which are designated "active" (or "on") and "inactive" (or "off"). Each of these states may be either of two distinct voltage levels designated "high" and "low". The more positive voltage source is considered to be the "high" and the less positive voltage source is considered to be the "low".

4.3 COMPARATOR CHASSIS

4.3.1 Signal Quality Module

Audio enters the module through transformer T1 and passes through an AGC network. The gain of the AGC network varies with the input level of the status tone so that the output level of the AGC circuit is constant. The status tone decode switch (Q9) prevents AGC action when status tone is not present, the level of other audio signals depends on the level of the previous status tone.

The output of the AGC is used for 1) comparator voting, 2) status tone detection, 3) line failure detection, and 4) voted audio.

4.3.1.1 Comparator Voting

AGC output is applied to a high pass filter where signals below 2 kHz are attenuated. This filtering removes voice fundamentals and low frequency tones from the signal. The output of the filter consists of voice harmonics and noise, however, most of the signal energy is contained in the noise.

The output of the filter is routed to the signal quality detector, where a dc voltage is produced that is proportional to the noise floor of the signal. The noise floor is considered to be the minimum amplitude of a varying amplitude signal that consists of intelligence and noise. It is an indication of the noise level upon which the intelligence is "riding". A feedback loop (via Q17) keeps the dc level at the noise floor.

The dc output of the signal quality detector is routed to the activity checker to desensitize it so it does not false on noise. The dc output is also routed to the comparator input. If this dc level is lower than the comparator input level in the other signal quality modules the output switch of the comparator is activated and

-- the VOTED LED turns on
-- the audio gates are enabled
-- a low is applied to the vote indicate bus

Current from the reference generator is required to enable the comparator and the reference generator can provide only enough current to enable one comparator at a time. This assures that only one module will be voted at any given time. It is always the module with the lowest noise floor that is voted initially.

After the module has been voted, the noise floor latch decreases the input to the comparator circuit to a level that corresponds to a noise floor that is 2 dB below the actual noise floor. This ensures that the module will remain voted until another module has a noise floor that is at least 2 dB better than that of the voted module. If required, a low from the command module vote lockup circuit can activate the vote lockup switch which grounds the input to the comparator, and prevents voting by another module.

4.3.1.2 Status Tone Detection

Output from the first AGC circuit is applied to the status tone decoder. Signals above and below the status tone are attenuated by the decoder so that only the status tone can activate the status tone decoder output switch. The output switch does the following whenever status tone is detected:

-- enables the AGC threshold switch,
-- disables the activity timer.

Whenever a status tone is not detected, the output switch:

-- enables the comparator switch
-- turns on the unsquelched indicate LED
-- provides a low at the unsquelched indicate output to the command module
-- enables the line failure timer

The status tone detector output switch is disabled whenever there is a line failure.

4.3.1.3 Line Failure Detection

AGC output also goes to the activity checker. Audio signals from the AGC output will produce a low at the output of the activity checker. As long as the activity checker output is low the activity timer output remains high. When there is an absence of audio to the activity checker, the output of the checker goes high. If the timer is not reset by another low within 10 milliseconds the output of the timer goes low. The low deactivates Q14 allowing pin 6 of the failure timer to go high if status tone is not present. If the input does not swing low for another 15 seconds (or 1 minute, if JU3 is

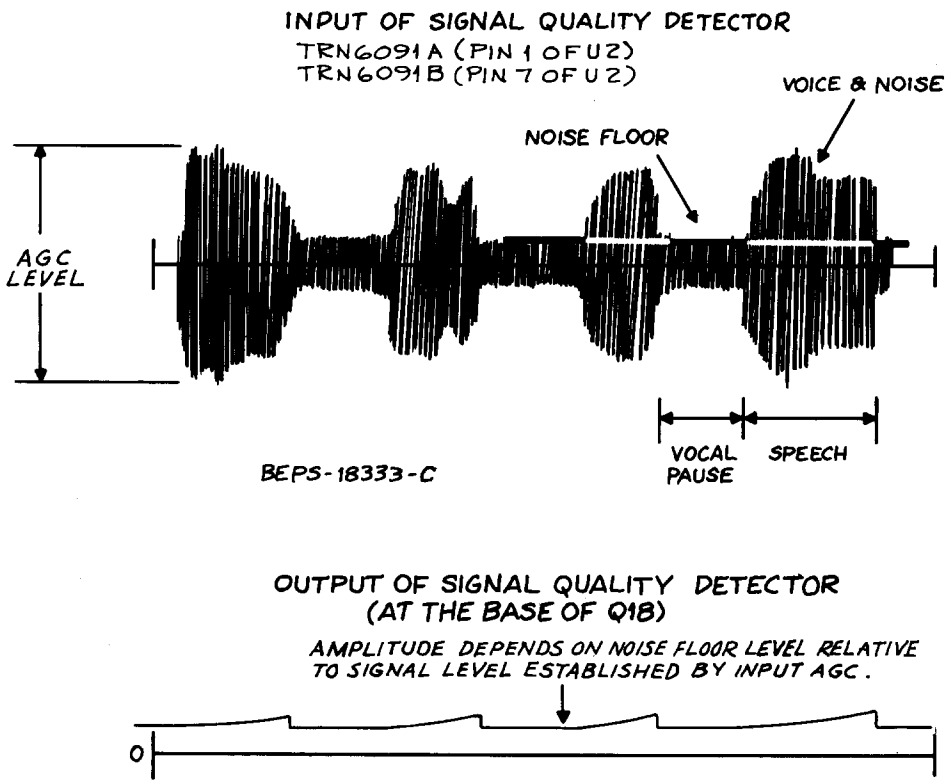

Figure 2. Noise Floor

out) the failure timer output goes low. A low at the failure timer output:

- -- turns on the FAILED LED,
- -- disables the status tone decoder output switch,
- -- disables the noise floor latch,
- -- disables the vote lock switch,
- -- provides a low to the failed bus.

Operation of the activity checker is inhibited whenever status tone is detected.

4.3.1.4 Voted Audio

When the receiver line has been voted, a low from the comparator enables audio gates (U4) to allow receiver audio to be routed to the command module on the audio bus.

4.3.1.5 Notch Switch

The notch switch is activated whenever the activity checker detects a signal and the signal quality module has been voted. The activated notch switch switches out the notch filter in the command module.

4.3.2 Command Module

4.3.2.1 Audio

Audio signals from the audio bus enter the module at pin 6 and are amplified by Q9. The notch filter attenuates any status tones in the audio, unless the filter has been shunted by Q10. Q10 is activated when a high is present on the notch bus.

Signals from the notch filter and emergency power alert tones (from the power supply) are routed to a buffer (Q2) and an amplifier (Q3). The output of Q3 is shunted to ground whenever shunt switch Q4 is activated. Q4 is activated by either the local handset PTT or a high at pin 11, the mute switch input. Q4 is deactivated whenever a receiver module is voted or when the local MONITOR switch is pushed to the right. Handset PTT or mute switch input always has priority.

Audio signals that are not shunted by Q4 pass through buffer Q5 to the line level potentiometer R19. Microphone audio from amplifier Q6 and keying tones from the tone keying module are also routed to R19. The line driver which consists of a phase splitter (Q11, Q12) and a push pull amplifier (Q13, Q14), provides the gain for driving the monitor audio line. A tertiary winding on the output transformer routes monitor audio to a buffer amplifier to permit local monitoring.

4.3.2.2 Vote Switching and Lock Up

When a receiver channel has been voted, a low from the vote indicate bus deactivates Q17 and activates Q18. The high voltage at the emitter of Q18 activates the vote switch Q16 and delay dropout switch Q20. Activating vote switch Q16:

- -- deactivates shunt switch Q4,
- -- routes a low to the dropout delay bus (primarily used for activating keying modules),
- -- energizes the optional relay, K1.

Delay dropout switch Q20 will stay deactivated during a temporary loss of a vote indicate low at pin 15 due to fading or a period of time determined by JU12. When Q20 is deactivated, Q16 is activated.

When Q17 has been deactivated Q19 will be activated after a 90 millisecond delay. The output of Q19 can trigger the vote lock option timer U1 and provides a low to the emitter of Q21, the lock up switch, so that it can be activated by the timer. Operation of the timer depends on the jumper configuration used.

The vote lock option timer, U1, can operate in four different modes. U1 can:

- -- activate Q21 for 400 msec at the beginning of each transmission,
- -- keep Q21 activated for the duration of a single transmission,
- -- alternately turns Q21 on for 400 msec and off for 10 msec for the duration of the transmission,
- -- be inhibited from locking up the comparator.

When Q21 is activated by the timer, the low at the collector is routed to the vote lock up bus (if JU11 is in) where it can lock up the voted signal quality module.

4.3.2.3 Reference Generator

The reference generator Q15 is a constant current source that ensures only enough current to activate the comparator circuit in one signal quality module. This prevents voting by more than one module at a time.

4.3.3 Secondary Line Driver

4.3.3.1 Line Driver

The secondary line driver is an optional item, which when used, is located in position 7 or 8 of the comparator interconnect chassis. It provides line equalization and audio amplification to drive an auxiliary 600-ohm wire line. Voted audio, present at module input pin 10, is buffered by Q1. Tone keying tones are mixed into the audio path through pin 11. The combined signal is then coupled through a 20 dB audio amplifier (Q2) and a second buffer (Q3) to a line equalization network (Q4). A third high impedance buffer (Q5) isolates a 20 dB line driver and push-pull

amplifier (Q6, 7, 8, 9) from the line equalization network. Output transformer T1 provides impedance matching for the amplified audio signal and couples the signal to (+) and (-) terminals at pins 3 and 4 and a line audio output at pin 2.

4.3.3.2 Status Tone Oscillator

The secondary line driver also employs a status tone oscillator for use in sub- comparator (secondary encoder) applications. An LC tuned circuit establishes oscillator frequency and applies the signal to an amplifier (Q12). The amplified tone is then buffered by Q15, amplified by Q16, and mixed into the audio path for transmission.

A regenerative feedback network is employed to hold the oscillator output level constant. Oscillator frequency is sampled at the emitter of Q15 and applied to shunt transistor Q14. As the oscillator output increases, Q14 turns on more, creating a greater load at the collector of feedback transistor Q13. Conversely, a decrease in oscillator output decreases the drive to Q14, applying more gain to the LC circuit.

The status tone is disabled when a vote indicate is present. A low, present at the vote indicate bus, is applied to the base of Q10, placing a high at Q10 collector. This high causes Q17 and Q11 to turn on, providing a switched ground disable to the status tone oscillator network.

4.3.4 Tone Priority Module

4.3.4.1 General

The tone priority module provides two separate audio paths. Voted audio is applied via pin 10. Console audio is applied via pins 19 and 20, and may occur either when the system transmitter is in the unkeyed (Mode I), or keyed (Mode II) state. When the handset option is used for intercom purposes, all audio lines except the comparator to repeater intercom line are functional. Refer to Figure 3 for functional details.

4.3.4.2 Audio Paths

NOTE

Refer to Figure 4 for simplified system block diagram.

4.3.4.2.1 Voted Audio

Voted audio signals enter the tone priority module from the command module via pin 10. After amplification by Q1, the signal passes through transmission gate U1B and is buffered by Q2 and Q3. Tones from the tone keying module are mixed with voted audio at the base of Q3. The signals are then passed through line driver Q7-Q10 and applied to the transmitter via pins 3 and 4.

4.3.4.2.2 Console Audio

4.3.4.2.2.1 Transmitter Unkeyed (Mode I)

In Mode I operation, the transmitter is keyed by the dispatcher console. The console PTT switch is depressed, applying high level guard tone to pins 19 and 20 on the tone priority module. The high level guard tone is detected and a switched ground from Q30 removes the bias from Q16, turning Q16 off. Q16 collector goes high enabling transmission gate U1A. Since a vote indicate is not present in this mode, pin 15 is high, turning Q20 on. Q20 collector goes low turning Q4 on and allowing console audio to bypass the 2175 Hz notch filter. Console audio is amplified by Q5, Q6 and passes through transmission gate U1A. The audio signal then passes through buffers Q2 and Q3 and line driver Q7-Q10 to the transmitter via pins 3 and 4. Upon guard tone detection, shunt switch Q15 is turned off allowing the remainder of the high level guard tone and console audio to be passed through the line driver to the transmitter. At the same time, Q36 is turned on applying a high to the base circuit of Q18, Q19. Q20 holds Q19 off, however, Q18 turns on applying a low to pin 23 to disable the comparator tone keying module.

NOTE

The high level guard tone from the console is set for 115 msec duration. If the high level guard tone will not pull in both the decoder in the transmitter and the guard tone detect circuit in the tone priority module, lengthen the period of high level guard tone timer in the console as required to pull in both circuits.

4.3.4.2.2.2 Transmitter Keyed (Mode II)

When a receiver is voted, the transmitter is keyed by the tone keying module. Keying tones are applied through pin 11 and voted audio through pin 10. Since there is no guard tone detect, U1B is enabled, passing the voted audio. When console priority takes place, transmission gate U1B is disabled and the bias to Q16 through CR4 is removed. Since vote indicate was present prior to console priority, Q17 is off and C21 is charged. When CR4 is back biased, Q16 remains on for the discharge time of C21 and R52 (approx. 200 msec) and transmission gate U1A remains disabled for that time. This is enough time to prevent console high level guard tone and function tone from being heard. After the 200 msec delay, Q16 turns off and transmission gate U1A is enabled. In this mode of operation, the tone keying module in the comparator provides the keying tones, *NOT* the console. Since vote indicate is present (vote indicate bus is low), Q20 collector is high and Q4 is off. The 2175 Hz notch filter, now in the console audio path, will prevent console and tone keying module guard tones from mixing. The vote indicate bus is locked in this state for the duration of console priority. That is, when console guard tone is detected, Q36 is turned on

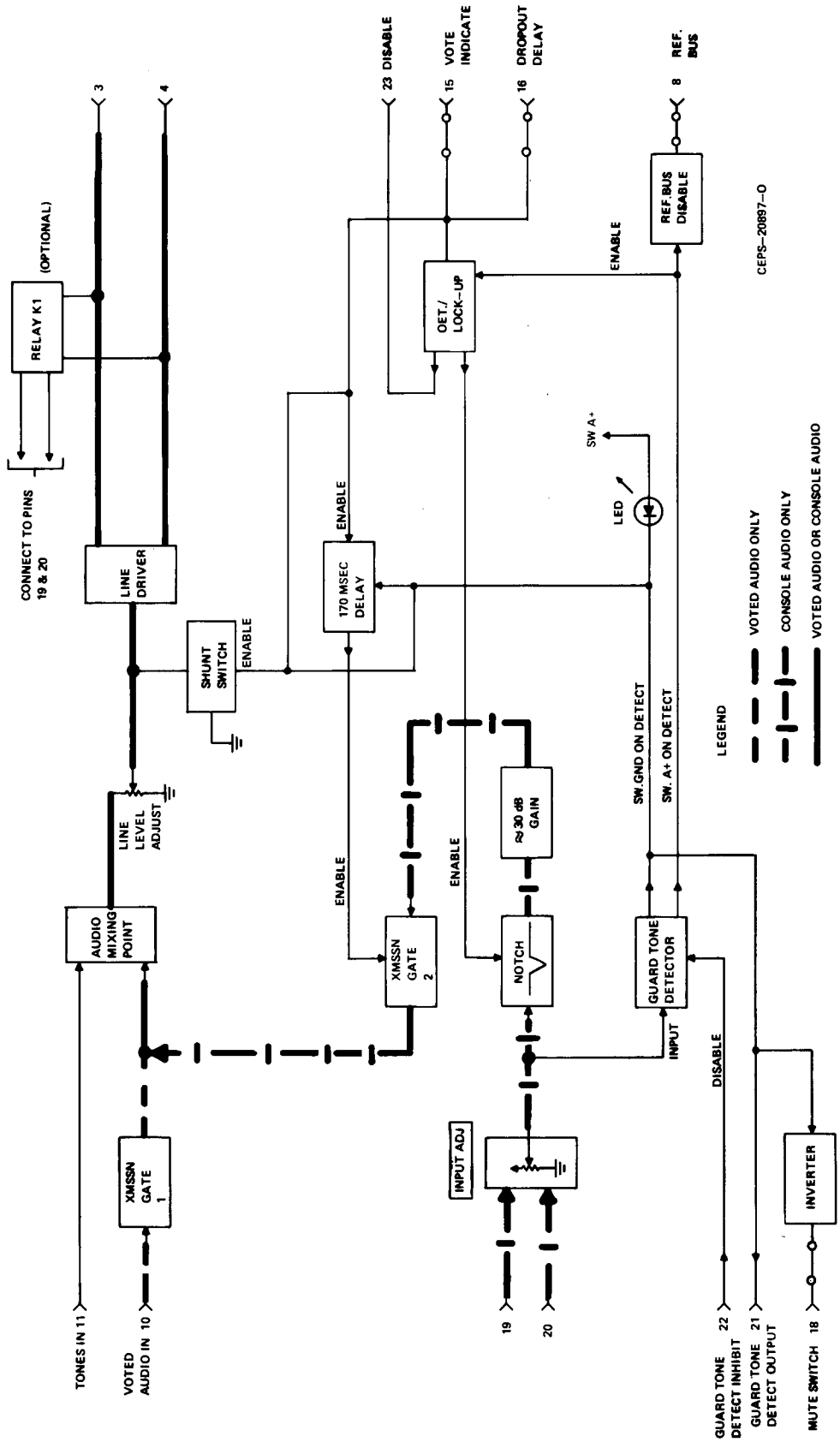

Figure 3. Functional Block Diagram

applying a high to the base of Q18, Q19. This high turns on Q19 which holds the vote indicate bus low. The low on the vote indicate bus turns Q21 on which holds Q18 off preventing the comparator tone keying module from being disabled. Therefore the low level guard tone is supplied by the tone keying module.

4.3.4.3 Control

4.3.4.3.1 Simplex Operation

With the guard tone detection circuit enabled, Q35 collector is brought low, disallowing a voted audio condition by holding the reference bus low. Also, mute switch Q22 is turned on to mute voted audio.

4.3.4.3.2 Duplex Operation

In duplex operation, JU3 and JU8 are cut, disabling Q35 and Q22 respectively and allowing console monitoring of a voted receiver even in a console priority state.

4.3.4.3.3 Guard Tone Detect Circuit

When the transmitter is initially keyed from the console, high level guard tone (2175 Hz) is amplified by Q23 and Q24 and applied to emitter-follower Q25. The emitter signal is amplified by disable amplifier Q32 and detected by Q33. The resulting dc voltage turns off disable switch Q34 and removes a disabling ground from the base of switch driver Q29.

The emitter output of Q25 is also applied to a 2175 Hz "Vibrasponder" resonant reed. Only the 2175 Hz component of any signal is coupled through the secondary circuit of the reed to the base of Q26. After amplification by Q26 and Q27, the signal is detected by Q28. This detection causes switch driver Q29 and guard tone detect switch Q30 to saturate. With Q30 saturated, the ground present at its collector is used to turn on the priority indicator and to perform audio gating and control functions. Also, saturation of Q30 causes the collector of Q36 to go high. The high from Q36 is applied to the base circuits of Q35 which pulls the reference bus low, and Q18 and Q19, which locks the vote indicate bus in its current state. If the vote indicate bus is low, Q20 is off and Q21 is on. This high then turns Q19 on holding the vote indicate bus low. However, since Q21 is on, it holds the base of Q18 low enough to prevent it from turning on. If the vote indicate bus is high, Q20 is on and Q21 is off. This high then turns Q18 on and Q19 is held off by Q20.

Bootstrap transistor Q31 is normally on to provide 30 dB attenuation to the high level guard tone. When high level guard tone is detected, the ground present at the collector of Q30 turns off Q31. When this occurs, the ground is removed from R77 which is in parallel with the reed secondary. This action removes the attenuation so that low level guard tone will be applied to Q26 at the same level as high level guard tone. This is necessary since the high level guard tone is only present when the transmitter is initially keyed. After the high level guard tone is removed, the low level guard tone remains as long as the transmitter is keyed. The added gain enables the low level guard tone to keep Q29 and Q30 on. When the transmit function ends, the low level guard tone is removed. However, the reed coasts (or rings) for a period of time which prevents Q30 from turning off. Q32 senses loss of guard tone and turns Q33 off and Q34 on. The low from Q34 collector turns off Q29 which then turns off Q30, ending guard tone detection.

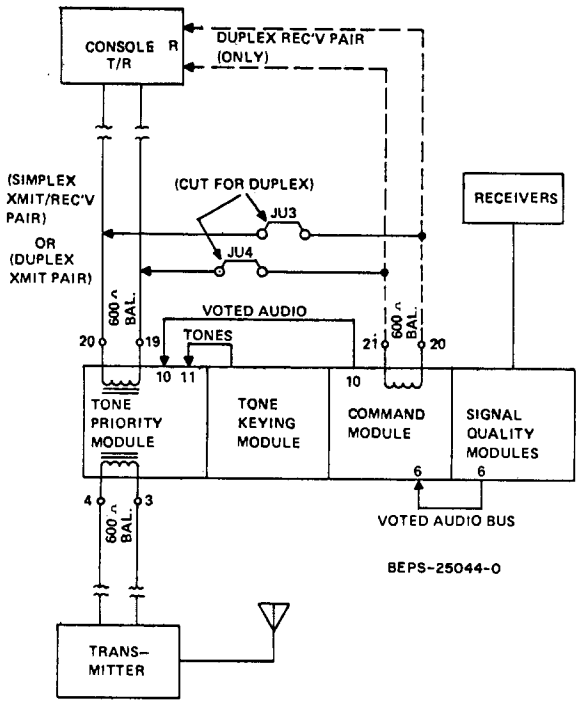

Figure 4. "Spectra TAC" System With Tone Priority Module, Simplified Block Diagram

4.3.4.4 Power Out Option

Facilities have been provided for installation of a relay (K1). During a power out state at the comparator, the tone priority module will be bypassed, enabling continued transmitter operation. Install K1 as shown on the schematic diagram and remove JU6 and 7 on the tone priority module.

NOTE

The power out option cannot be used when console to comparator to transmitter total line loss will not allow a signal of at least -20 dBm at the transmitter. When this option is used, set LINE LEVEL control R13 on the tone priority module for the same level as the level received from the console. It may be necessary due to line loss, to increase the line level from the console to obtain a signal level sufficient to drive the transmitter (greater than -20 dBm at the transmitter).

4.3.5 Comparator Disable

4.3.5.1 Grounding the DISABLE screw terminal on the interconnect board inhibits the circuits in the keying module that generate keying tones or currents; comparator audio paths are only affected by the disabling function if JU13 on the TRN6093A Command Module is installed. Note that if JU13 is installed, CR1 on the tone keying module or CR14 and CR15 on the DC keying module must be removed.

4.3.5.2 If a tone priority module is used without installing JU13 on the TRN6093A Command Module, grounding the DISABLE terminal may lockout any access to the repeater. In Mode I (refer to the above paragraphs on tone priority operation) with the transmitter unkeyed, an input to the tone priority module is applied to the repeater transmitter. In Mode II with the transmitter keyed, the ground on the DISABLE terminal must be removed and the keying sequence reinitiated to allow the console to control repeater transmitter operation. Unless the ground on the DISABLE terminal is removed, the keying circuits are disabled, and the transmitter cannot be keyed by the console.

4.3.5.3 In applications where audio applied to the tone priority module is transmitted, but voted audio is not, the following conditions must be met:

- diode CR1 is removed from the TRN6095A Tone Keying Module
- a similar diode replaces JU13 (cathode to pin 24) on the TRN6093A Command Module
- a switched ground must be applied to the DISABLE ground.

In this application the voted audio can be monitored by a duplex console if:

- CR19 is removed from the TRN6095A Tone Keying Module
- a similar diode replaces JU14 (cathode to pin 24) on the TRN6093A Command Module.

Note that voted audio is transmitted unless the switched ground is applied to the DISABLE screw terminal.

(Page 9 is blank)

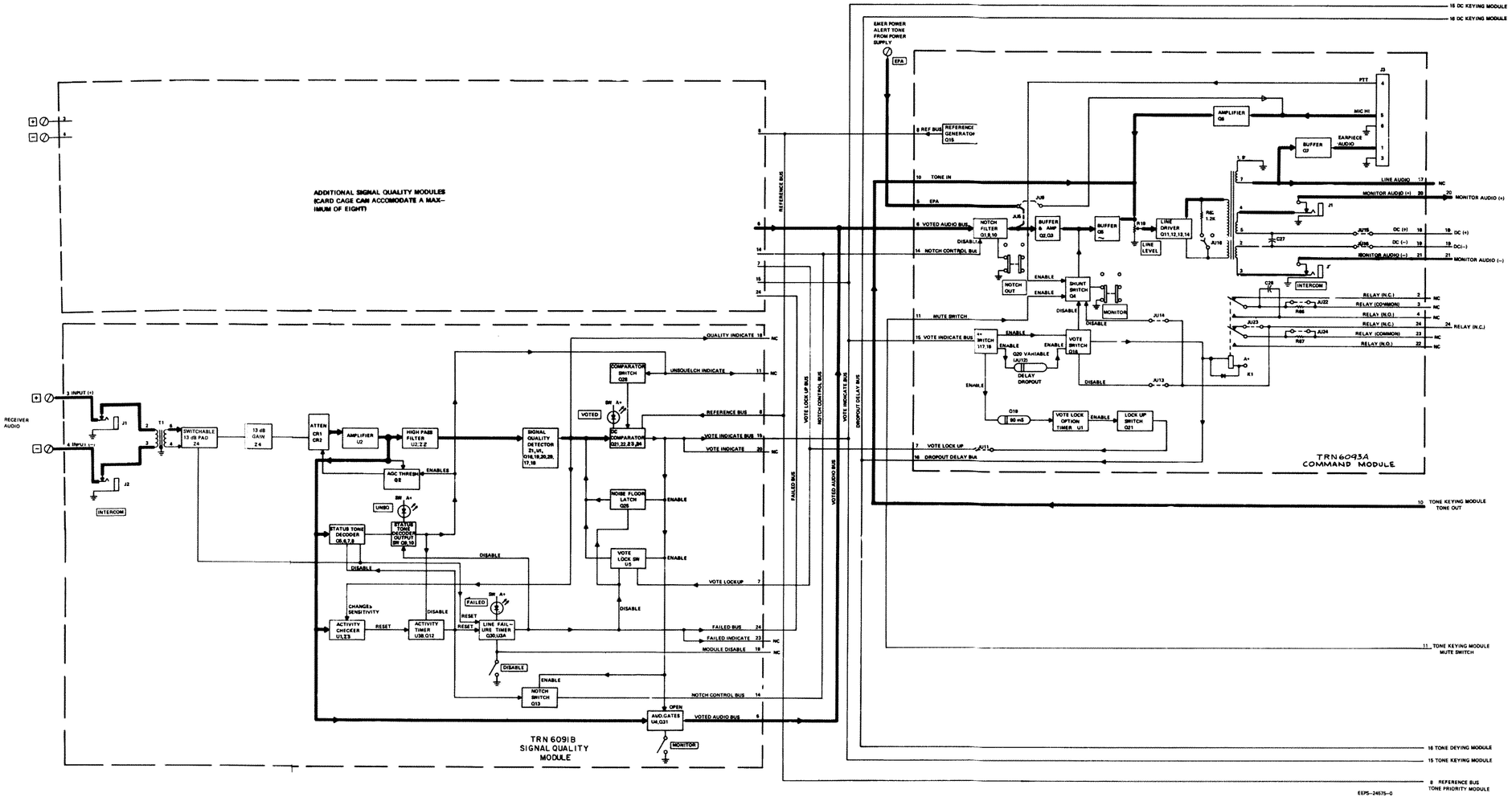

"Spectra TAC" Comparator Functional Block Diagram Motorola No. EEPS-24575-A (Sheet 1 of 2) 7/6/78-NPC

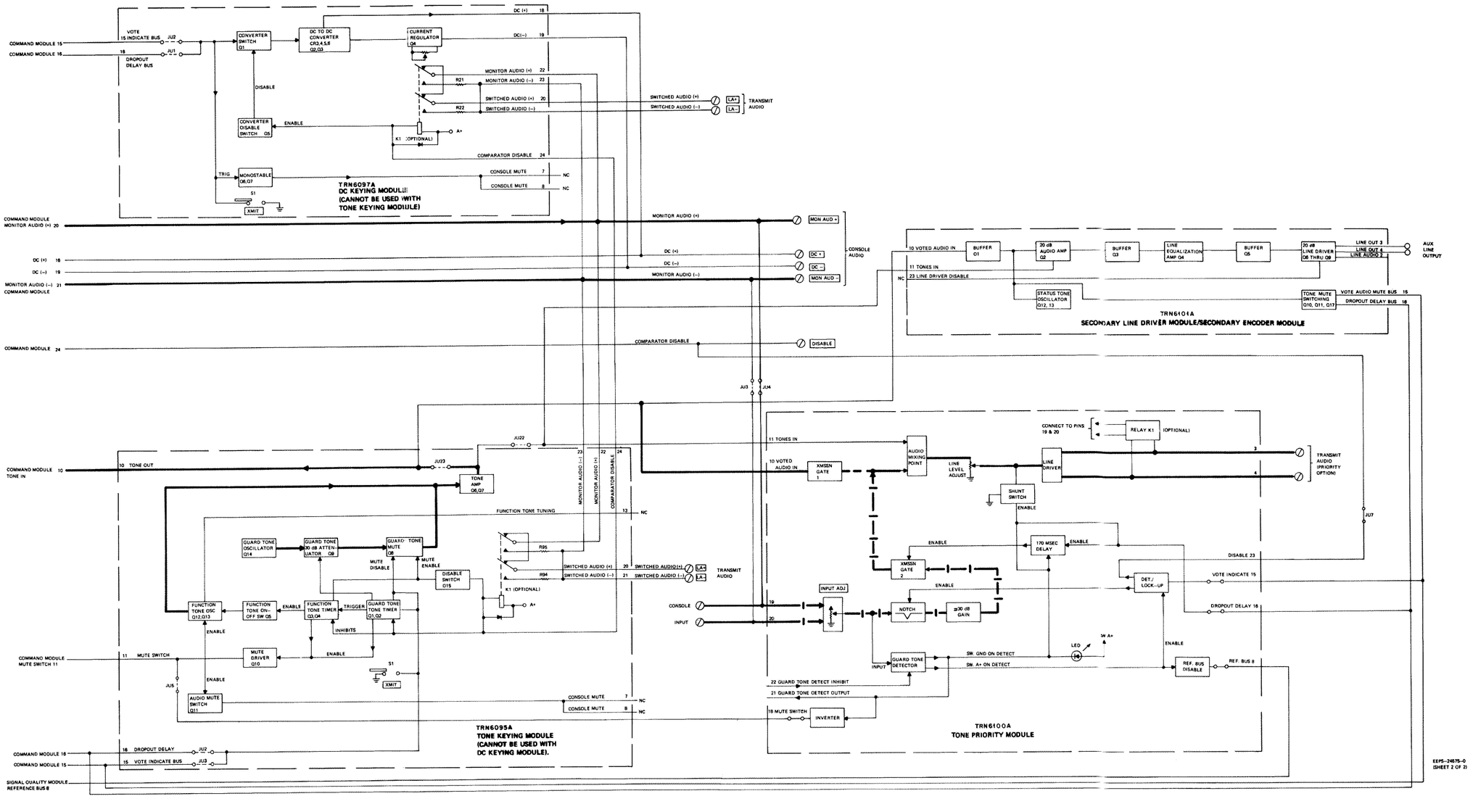

"Spectra TAC" Comparator Functional Block Diagram Motorola No. EEPS-24575-A (Sheet 2 of 2) 7/6/78-NPC

DESCRIPTION

1. INSPECTION

Inspect the equipment thoroughly as soon as possible after delivery. If any part of the equipment has been damaged in transit, report the extent of damage to the transportation company immediately.

2. PLANNING THE INSTALLATION

Since a good installation is so important to obtain the best possible performance of the communications system, carefully plan the installation before actual work is started. Location of the comparator in relation to power, audio lines, convenience and access for servicing should be considered. The comparator (or multiple comparators) are normally shipped in a 30-inch cabinet. However, options permit the comparator(s) to be ordered without a cabinet (for installation in an existing cabinet or equipment rack) or in a larger cabinet (for multiple frequency systems or where more cabinet space is required). The cabinet dimensional detail diagrams show the size of the various cabinets for planning the space requirements. Read the entire procedure and the many suggestions offered to help you plan your installation. Make sure all tools, equipment and facilities are available when the installation is begun.

3. VENTILATION

This equipment is operated without forced ventilation. The cabinets have vents which allow outside air to be drawn in through an opening in the bottom of the doors and expelled through an opening in the top of the doors. The heated air rising in the cabinet causes a natural draft. Therefore, it is essential that the openings be kept free of obstructions so the air flow will not be restricted.

4. INSTALLATION

4.1 WITH CABINET

The comparator may be shipped in either a 30-inch or larger cabinet. The cabinets should be installed on a solid, level surface convenient to the power source and audio and control lines. Allow sufficient space for front and rear access for servicing.

4.2 WITHOUT CABINET

The comparator chassis is designed for standard 19-inch rack mounting. Each comparator chassis (for up to eight receiver inputs) requires 5-1/4 inches of vertical rack space.

5. CONNECTIONS

5.1 POWER CONNECTIONS

5.1.1 Connection to 120 V AC (50 or 60 Hz)

Insure that the switch on the comparator power supply (located on the side of the chassis) is set in the 120 V position. Each comparator power supply may be cascaded in parallel by plugging the external female jack into the chassis mounted male connector in the above adjacent supply. This results in the female connector on the upper supply being unconnected. The lowest comparator power supply should be connected directly to the nearest 120 V ac power source using the TLN5960A Line Cord Kit.

5.1.2 Connection to 240 V AC (50 or 60 Hz)

Set the switch on all the comparator power supplies to the 240 V ac position. Replace the 1/2 amp fuse in all the power supplies with 1/4 amp slow blow fuses.

Each comparator power supply may be cascaded in parallel by plugging the external female jack into the chassis mounted male connector on the above adjacent supply. This results in the female connector on the upper supply being unconnected. The lowest comparator power supply should be connected to the TLN5960A Line Cord Kit. Remove the plug from the power cord and replace it with a suitable termination that is compatible with the 240 V ac source. Connect the comparator power cord to the 240 V source.

5.1.3 Emergency Battery Installation

5.1.3.1 Using TKN6760A Cable Kit

Remove the power supply from the comparator. Route the battery cable wires with spade lugs through the grommet on the rear of the power supply. Observing proper polarity, attach the two spade lugs on the end of the cable to their respective screw terminals /BATT (+), BATT (-)/ on the power supply circuit board. Connect the remaining end of the cable to the battery. The battery should be mounted on the floor of the cabinet or on the TRN6342A Mounting Rack. Each rack provides mounting for two batteries.

NOTE

Most rechargeable 12 V batteries may be used, but the TLN5633A Battery Kit is recommended. Use of any other battery could result in any of the following problems:

1) Damage due to excessive current. The charging circuit in the power supply limits the charging current to 800 mA, make sure that the battery used is rated to handle at least 800 mA.

2) Increased charging time. If the battery is rated for a maximum current that greatly exceeds 800 mA the charge time of the battery might exceed the time listed in the Power Supply section of the manual.

3) Heat damage from continuous charging current. The battery charging circuit is constantly providing current to the battery even when it is fully charged. This will not damage the TLN5633A, but may damage some other rechargeable 12 V batteries.

4) Incompatibility with TKN6760A Cable Kit. Using another battery may require changing the plug on the battery end of the cable.

5.1.3.2 Without TKN6760A Cable Kit

A cable must be fabricated with one end terminated with spade lugs and the other end terminated so that it will mate with the battery terminals. Remove the power supply from the comparator. Route the battery cable wires with spade lugs through the grommet on the rear of the power supply. Observing proper polarity, connect the spade lugs to the power supply board at the screw terminals labeled /BATT (+) and BATT (-)/. Do *not* connect the other side of a fabricated battery cable directly to a battery. Insure first that the cable has an in-line 2 amp slow-blow fuse, then observing polarity, connect the cable (with in-line fuse) to the battery.

5.1.4 Connection to Existing 13.8 V Supply

This information deals with the connection of power to comparators that are not equipped with a power supply and receive their power from another unit.

Connect the 13.8 V dc positive line to the screw terminal on the module interconnect board marked A+. Connect the negative, or ground line, to the screw terminal marked GND.

NOTE

The LED indicators on the front panel are used for maintenance purposes. If operation of the indicators is desired, connect a jumper between the A+ and SW+ terminals on the interconnect board. Remove the jumper after maintenance is completed.

5.2 AUDIO AND CONTROL LINE CONNECTIONS

5.2.1 Receiver Audio Line Connections

Each associated voting receiver connects to a separate signal quality module in the comparator chassis. If there are five receivers to be voted, five signal quality modules are used. Connect the audio line from the receiver to the screw terminals marked (+) and (-) on the rear of the interconnect board for the associated signal quality module.

5.2.2 Console Audio Line Connections

NOTE

Comparator will only drive one 600 ohm line.

Voted audio output to the console is connected to the MON AUD (+) and (-) screw terminals on the rear of the interconnect board.

5.2.3 Transmitter Audio and Control Line Connections

NOTE

Comparator will only drive one 600 ohm line.

In systems where voted audio is to be retransmitted, the comparator requires an optional tone

or DC keying module, or provides a relay closure, depending on the type of transmitter control required. Connections differ for tone and DC control as described below.

5.2.3.1 Tone Control Connections

Step 1. Check the tone keying module for optional relay K1. If K1 is used, remove (cut) jumpers JU1 and JU2 on the rear of the interconnect board. If K1 is not used, JU1 and JU2 on the interconnect board must be in. Also check that JU1 on the tone keying module is set for proper frequency; in for 1850 Hz, out for 1950 Hz. Install JU10 on the command module.

NOTE

If K1 is used and the monitor audio line is terminated, remove R95 from the tone keying module.

Step 2. Plug the tone keying module in its assigned slot in the comparator.

Step 3. Connect the transmit audio line (pair) to screw terminals marked LA+ and LA- on the rear of the interconnect board.

NOTE

A transistor switched ground is provided at pins 7 and 8 of the keying module position to mute the console during the transmitter keying function. Specific use of this switched ground depends on the system configuration.

5.2.3.2 DC Control Connections

Step 1. Check the DC keying module for optional relay K1. If K1 is used, remove (cut) jumpers JU1 and JU2 on the interconnect board. If K1 is not used, JU1 and JU2 on the interconnect board must be in.

NOTE

If K1 is used and the monitor audio line is terminated, remove R21 from the DC keying module.

Step 2. Plug the DC keying module into its assigned slot in the comparator.

Step 3. Connect the transmit audio line (pair) to screw terminals marked LA+ and LA- on the rear of the interconnect board.

Step 4. If separate dc control lines are used, cut JU19 and JU20 on the command module. Connect the transmitter DC control line (pair) to screw terminals marked DC+ and DC- on the rear of the interconnect board.

Step 5. A transistor switched ground is provided at pins 7 and 8 of the keying module position to mute the console during the transmitter keying function. Specific use of this switched ground depends on the system configuration.

Step 6. Adjust DC line current level as described in the maintenance section of this manual.

5.2.4 Special Function Connections

Several special function signal connections are provided at pins on the interconnect board at the various module positions. Specific connection and use of these functions depend on a particular system design. The connection point (pin) and a description of these functions are given in Table 1.

Table 1. Special Function Signals

PIN	FUNCTION	DESCRIPTION
	SIGNAL QUALITY MODULE POSITIONS	
11	Unsquelch Indicate	Transistor switched ground output to indicate associated receiver is unsqueiched.
18	Quality Indicate	A DC level output corresponding to the signal quality of the associated receiver.
19	Module Disable	A switched ground input disables the individual signal quality module.
20	Vote Indicate	Transistor switched ground output to indicate associated receiver has been voted. A ground input will enable monitoring the associated receiver.
23	Failed Indicate	Integrated circuit switched ground output indicates receiver has failed or been disabled.
	COMMAND MODULE POSITION	
7	Vote Lockup	A switched ground input locks up voted receiver.
16	Dropout Delay	Prevents repeater dropout for a preset time.
24	Comparator Disable	A switched ground input disables comparator. See Disable text in Description section of manual.
	KEYING MODULE POSITION	
7, 8	Console Mute	Transistor switched low output during transmitter keying function.
13	Function Tone Tuning	Provides ability to externally change function tone frequency from standard tones.

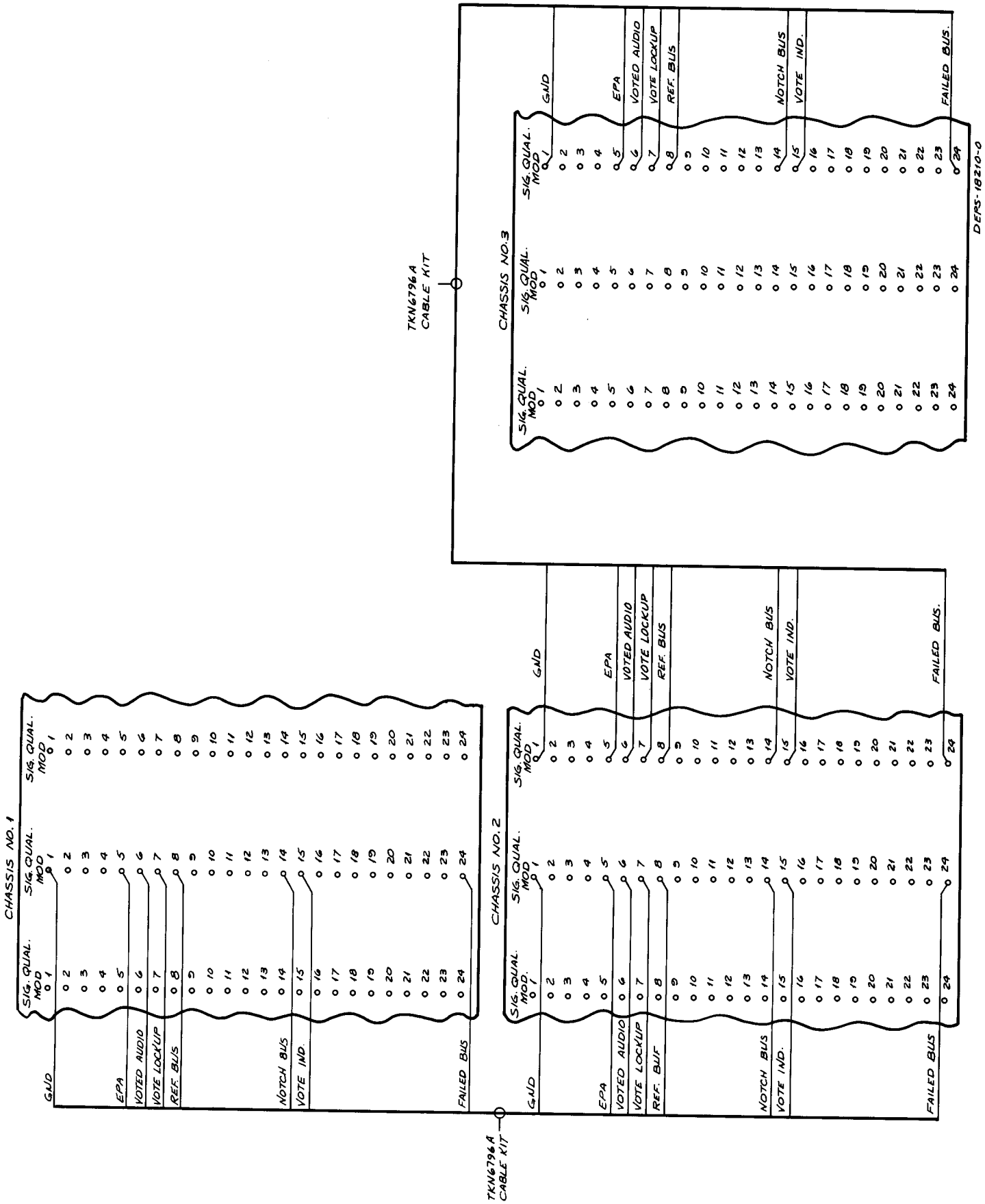

Figure 1. Chassis Interconnection for 9-24 Channels

5.2.5 Multiple Chassis Connections for 8-to-24 Inputs

In systems having more than eight voting receivers, an additional comparator chassis is required for each additional group of up to eight receivers (i.e., one chassis for 9 through 16 receivers, two chassis for 17 through 24 receivers). The additional chassis contain only signal quality modules, the command and keying modules are not used and their positions must be left vacant. Interconnect the chassis (in parallel) using a TKN6796A Cable Kit for each additional chassis as shown in Figure 1.

NOTE

After installation of additional comparator chassis, the power supplies in all chassis must be adjusted so that the A+ level into each chassis is exactly the same.

6. SIGNAL QUALITY MODULE INSTALLATION

The signal quality module affects the system applicability as shown in the following chart.

MODULE VERSION	SYSTEM	
	0 dB	-13 dB
TRN6091B	JU4 IN	JU4 OUT

Additional signal quality modules may be installed when system growth requires additional voting receivers. Each additional signal quality module required should be ordered as option C178A. This option provides one signal quality module and a signal quality accessory kit. The accessory kit contains two guide rails and two spark gaps. Perform the following procedure for each signal quality module to be installed.

Step 1. Remove the contents of the signal quality accessory kit.

Step 2. Install the guide rails on the inside top and bottom of the chassis for the slot into which the signal quality is to be used. Snap the tongs on the guide rails into the holes provided on the chassis.

Step 3. Install the spark gaps between the receive audio lines and ground using the pads marked (+) and (-) on the rear of the interconnect chassis for that module position.

Step 4. Connect the receive audio line (pair) to the screw terminals.

Step 5. Plug in the signal quality module.

NOTE

After the signal quality module is installed, the receiver audio line level and line equalization adjustments must be made as instructed in the "Spectra TAC" Receiver manual.

7. PREOPERATIONAL ADJUSTMENTS

Prior to comparator operation, adjust the receiver audio line level and line equalization adjustments for each receiver as instructed in the "Spectra TAC" Receiver manual. After the receiver audio lines are set, adjust the comparator line level and, if a DC keying module is used, the DC line current level as instructed in the Maintenance section of this manual.

8. UNIT JUMPER ARRANGEMENT

8.1 TRN6091B SIGNAL QUALITY MODULE

JU1	Normally out, in for 1950 Hz status tone.
JU2	Normally out, in to disable line failure circuitry.
JU3	Normally in, out for 1 minute of line failure delay.
JU4	Normally out (-13 dB), in for 0 dB status tone operation.
JU5, 6	Normally in, out for use of RA and RB in special applications.

8.2 TRN6093A COMMAND MODULE

JU1	Normally out (2175 Hz), in for 1950 Hz notch filter.
JU2	Normally out, in for emergency power alert tone level changes.
JU3	Normally out, in for emergency power alert tone level changes.
JU4	Normally in, out for sample and hold lockup.
JU5	Normally in, out for emergency power alert tone continuously applied to line.
JU6	Normally in, out for sample and hold lockup.
JU7	Normally out, in for sample and hold lockup.
JU8	Normally out, in for vote lockup during transmission only.
JU9	Normally out, in when JU5 is removed.
JU10	Normally out, in for continuous notch filter operation (required in tone keying systems).
JU11	Normally out, in for vote lockup.
JU12	Normally set for 0 sec, moved to vary dropout delay time.
JU13	Normally out, in to disable and mute comparator with a disable signal.
JU14	Normally out, in for special applications.

8.3 TRN6111A INTERCONNECT BOARD

Jumper	Usage
JU1	Normally in, out when optional relay is used on tone or dc keying module.
JU2	Normally in, out when optional relay is used on tone or dc keying module.
JU3	Normally out, in when tone priority module is used with simplex console, *field installed.*
JU4	Normally out, in when tone priority module is used with simplex console, *field installed.*
JU5	Normally out, in when tone priority module is used.
JU6	Normally out, in when 2nd tone priority module is used.
JU7	Normally out, in when tone priority module is used.
JU8	Normally out, in when 2nd tone priority module is used.
JU9	Normally out, in for special applications.
JU10	Normally out, in for special applications.
JU11	Normally out, in for special applications.
JU12	Normally out, in for special applications.
JU13	Normally out, in for special applications.
JU14	Normally out, in for special applications.
JU15	Normally out, in for special applications.
JU16	Normally out, in for special applications.
JU17	Normally out, in for special applications.
JU18	Normally out, in for special applications.
JU19	Normally out, in for special applications.
JU20	Normally out, in for special applications.
JU21	Normally out, in when 2nd tone priority or 2nd secondary line driver module is used.
JU22	Normally out, in when tone priority or secondary line driver module is used.
JU23	Normally in, out when tone priority or secondary line driver module is used.

8.4 TRN6095A TONE KEYING MODULE

JU1	Normally in (1950 Hz), out for 1850 Hz function tone output.
JU2	Normally in, out for no dropout delay operation.
JU3	Normally out, in for vote indicate keying.
JU4	Normally in, out for special applications.
JU5	Normally in, out for guard tone only keying.

8.5 TRN6097A DC KEYING MODULE

JU1	Normally in, out for no dropout delay operation.
JU2	Normally out, in for vote indicate keying.
JU3	Normally in, out for longer monostable timing.

8.6 TRN6100A TONE PRIORITY MODULE

JU1	Normally out, in to attenuate transmit audio by 20 dB.
JU2	Normally in, out when JU10 is used.
JU3	Normally in, out for duplex console operation (*field removed*).
JU4	Normally in, out for output line bridging.
JU6	Normally in, out when optional relay K1 is used (*field removed*).
JU7	Normally in, out when optional relay K1 is used (*field removed*).
JU8	Normally in, out for duplex console operation (*field removed*).
JU9	Normally out, in for duplex operation (*field installed*).
JU10	Normally out, in for special applications.

8.7 TRN6101A SECONDARY LINE DRIVER MODULE

JU1	Normally in, out for line driver disable switch.
JU2	Normally out, in for 20 dB attenuation.
JU3	Normally in, out for line bridging.
JU4	Normally in, out for special applications.
JU5	Normally out, in for secondary encoder vote indicate use (*field installed*).
JU6	Normally out, in for secondary encoder delay vote indicate use.
JU7	Normally in, out for special applications.
JU8	Normally out, in for special applications.
JU9	Normally out, in for 1950 Hz status tone.
JU10	Normally out, in for special applications.
JU11	Normally out, in for line driver disable.
JU12	Normally out, in for 0 dB systems.
JU13	Normally out, in for use as a secondary encoder (*field installed*).
JU15	Normally out, in for 20 dB attenuation of line audio.
JU16	Normally A, B for line bridging.
JU17	Normally out, in for special keying applications.
JU18	Normally out, in for special keying applications.
JU19	Normally in, out for special keying applications.
JU20	Normally in, out for special keying applications.
JU21	Normally out, in for special keying applications.
JU22	Normally in, out for special keying applications.
JU23	Normally in, out for special keying applications.
JU24	Normally in, out for special keying applications.
JU25	Normally out (0 dB), in for -13 dB status tone (only when secondary encoder is used).

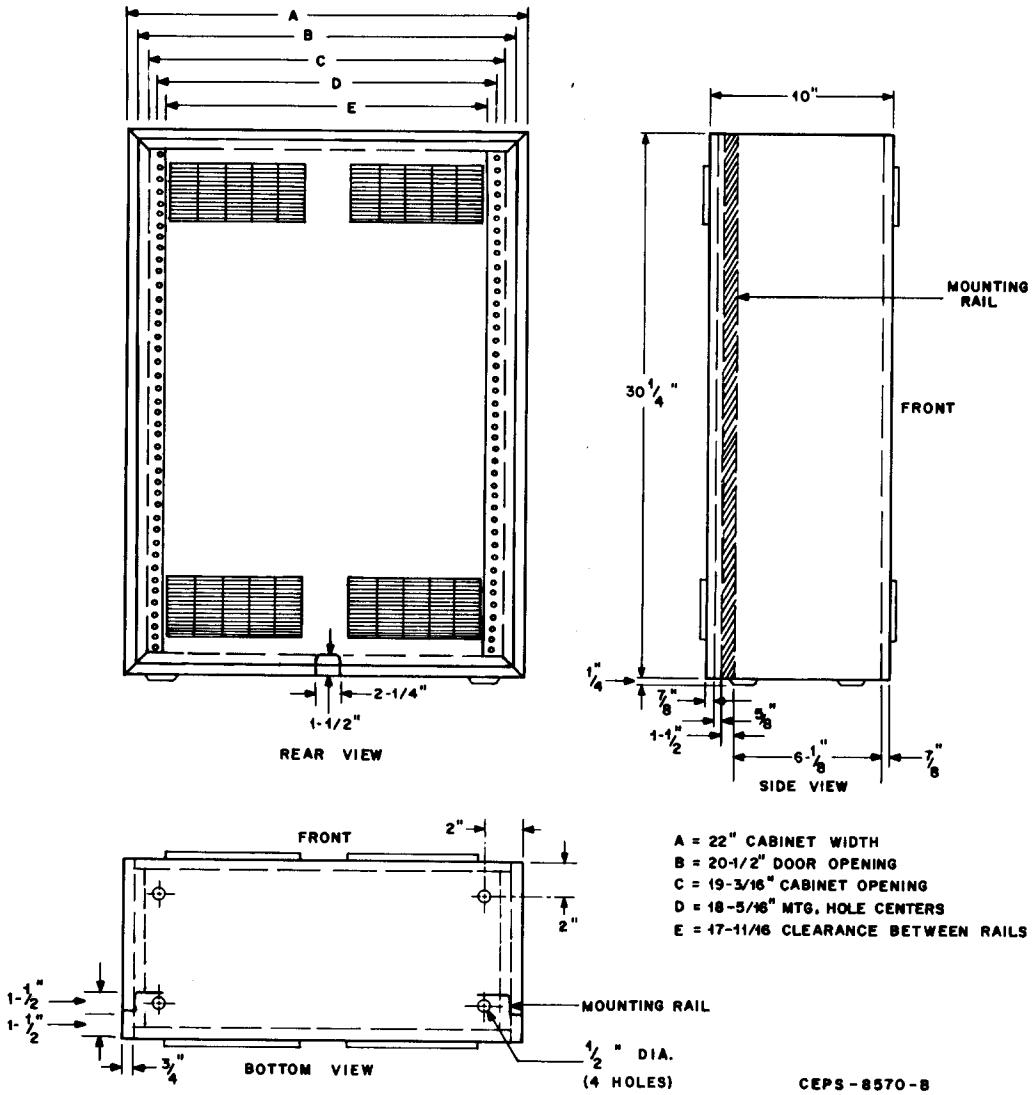

PARTS LIST

TRN6448A Cabinet Hardware Kit — PL-3626-O

REFERENCE SYMBOL	MOTOROLA PART NO.	DESCRIPTION
	2-836540	SPEED NUT (4 req'd.)
	3-135499	SCREW, tapping; 1/4 - 14 x 5/8" (4 req'd.)

THN6141A Cabinet Kit (30 inch) — PL-1787-D

REFERENCE SYMBOL	MOTOROLA PART NO.	DESCRIPTION
NON-REFERENCED ITEMS		
	15E84107D25	CABINET (30")
	13C84430D01	DOOR VENT (8 required)
	2S10101A55	SPEED NUT (48 required)

30" Cabinet Dimensional Detail & Parts List
Motorola No. PEPS-17818-A
2/10/78-NPC

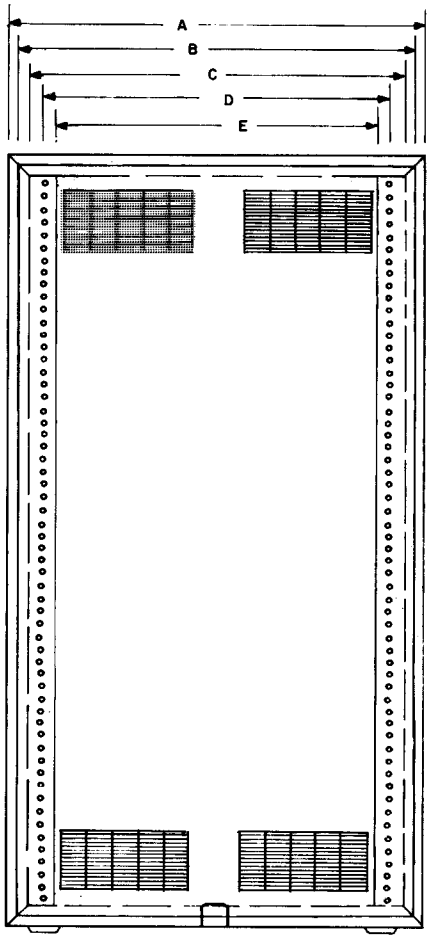

REAR VIEW

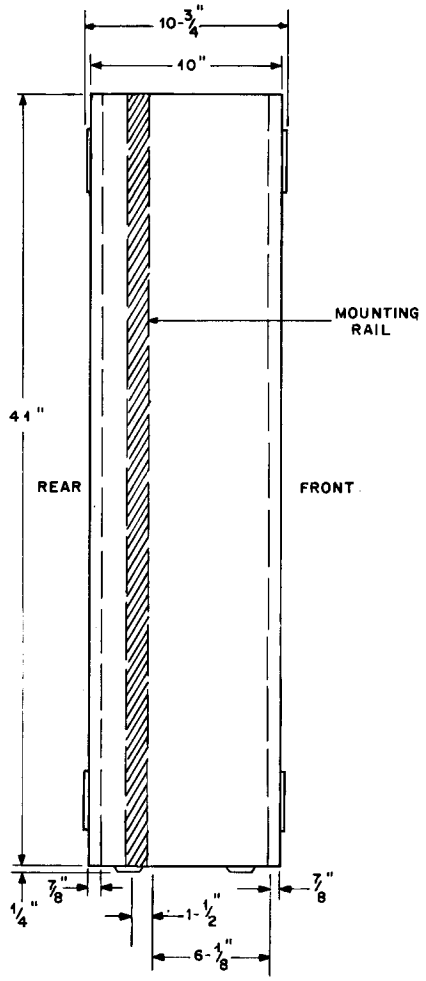

SIDE VIEW

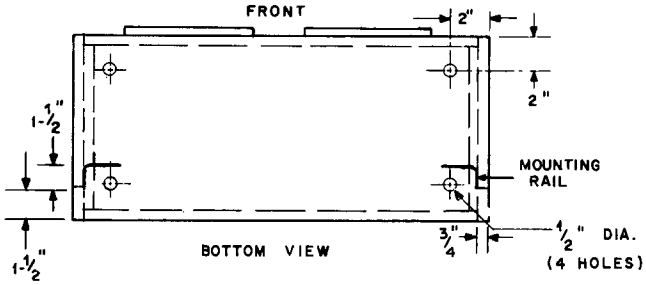

BOTTOM VIEW

A = 22" CABINET WIDTH
B = 20-1/2" DOOR OPENING
C = 19-3/16" CABINET OPENING
D = 18-5/16" MTG. HOLE CENTERS
E = 17-11/16" CLEARANCE BETWEEN RAILS

CEPS-8571-B

PARTS LIST

TRN6448A Cabinet Hardware Kit — PL-3626-O

REFERENCE SYMBOL	MOTOROLA PART NO.	DESCRIPTION
	2-836540	SPEED NUT (4 req'd.)
	3-135499	SCREW, tapping; 1/4 - 14 x 5/8" (4 req'd.)

THN6142A Cabinet Kit (41-Inch) — PL-1790-B

REFERENCE SYMBOL	MOTOROLA PART NO.	DESCRIPTION
NON-REFERENCED ITEMS		
	15E84143D24	CABINET (41")
	13C84430D01	DOOR VENT (8 required)
	2S10101A55	SPEED NUT (48 required)

41" Cabinet Dimensional Detail & Parts List
Motorola No. PEPS-18719-A
2/10/78-NPC

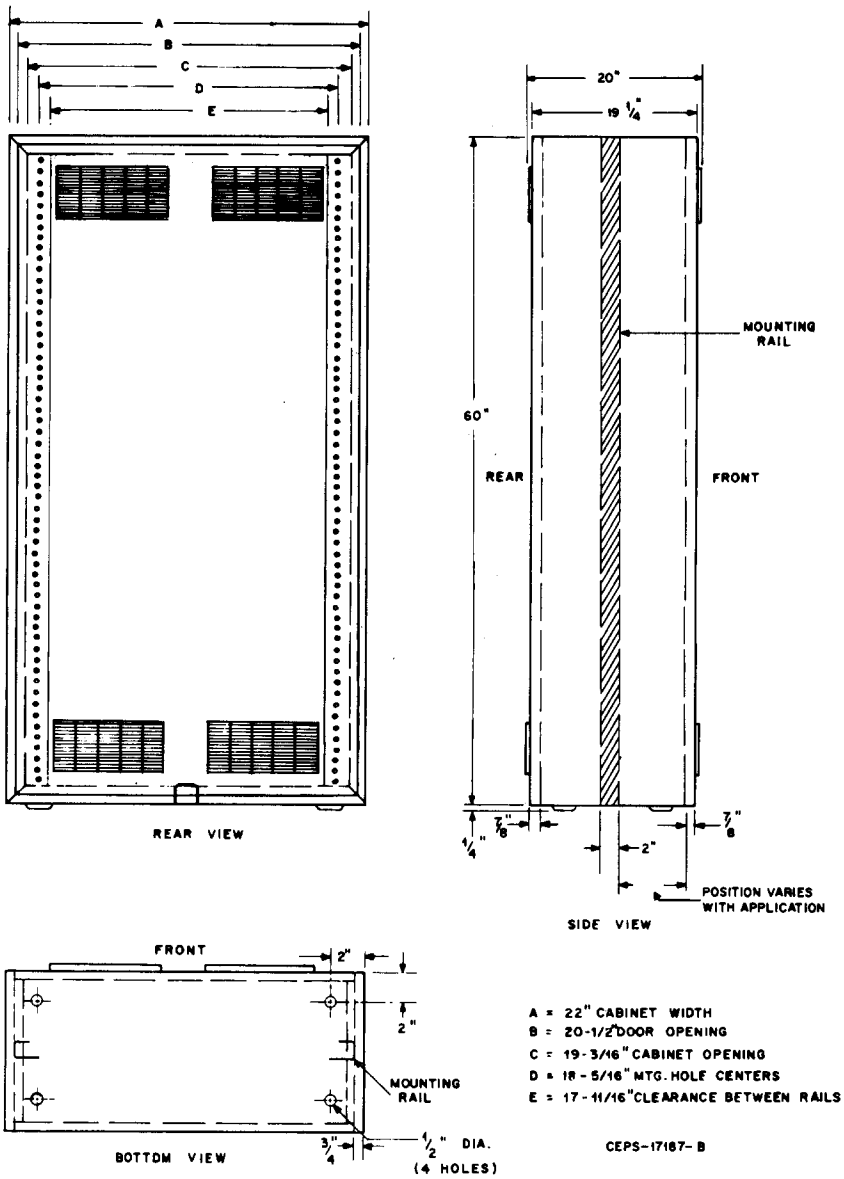

PARTS LIST

TRN6448A Cabinet Hardware Kit — PL-3626-O

REFERENCE SYMBOL	MOTOROLA PART NO.	DESCRIPTION
	2-836540	SPEED NUT (4 req'd.)
	3-135499	SCREW, tapping; 1/4 - 14 x 5/8" (4 req'd.)

THN6243A Cabinet Kit (60-inch) — PL-3401-A

REFERENCE SYMBOL	MOTOROLA PART NO.	DESCRIPTION
	15-83445K04	CABINET (60-inch)
	13-84430D01	DOOR VENT (8 required)
	2-10101A55	SPEED NUT (48 required)

60" Cabinet Dimensional Detail & Parts List
Motorola No. PEPS-18721-B
2/10/78-NPC

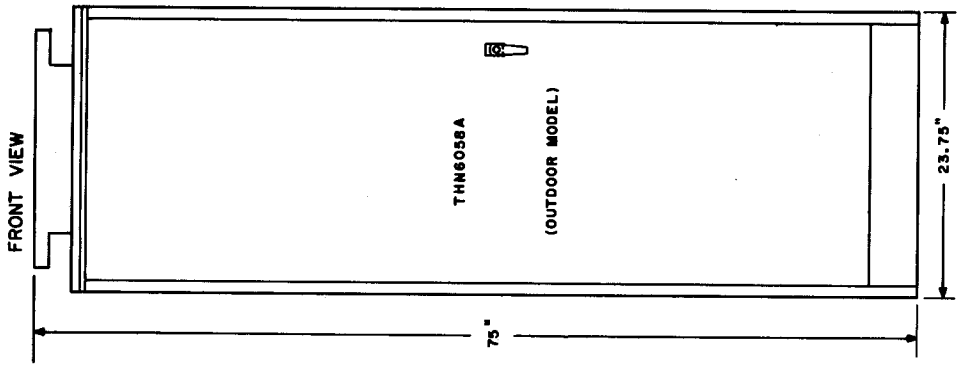

NOTES:
1. IF ENTRANCE OF POWER AND AUDIO CABLES THROUGH BOTTOM OF CABINET IS DESIRED, AREAS ENCLOSED BY DOTTED LINES MAY BE USED.
2. FRONT AND REAR DOORS CAN BE REVERSED FROM RIGHT OPENING TO LEFT HAND OPENING.
3. ELEVATE CABINET IF DANGER OF WATER SUBMERSION EXISTS.

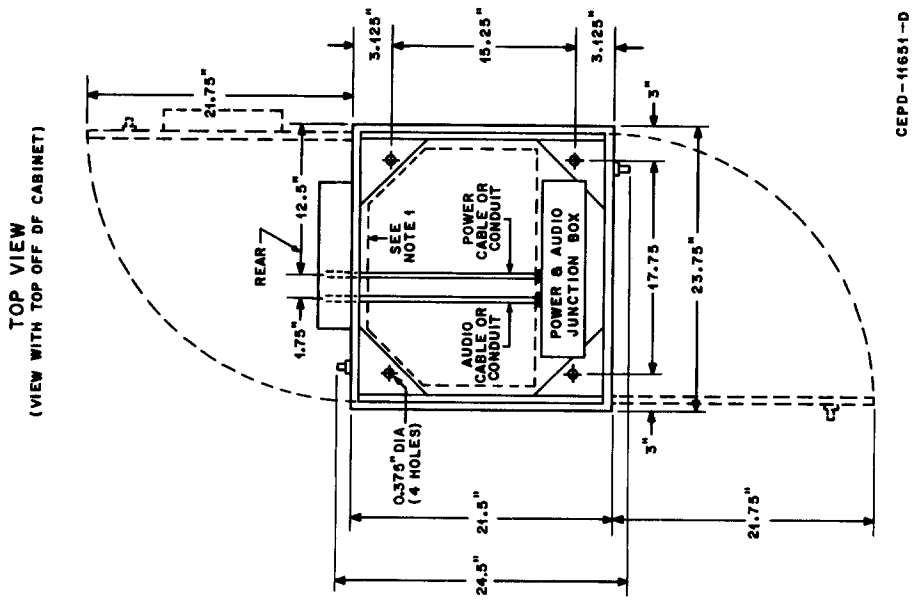

CEPD-11651-D

PARTS LIST

TRN6448A Cabinet Hardware Kit — PL-3626-O

REFERENCE SYMBOL	MOTOROLA PART NO.	DESCRIPTION
	2-836540	SPEED NUT (4 req'd.)
	3-135499	SCREW, tapping; 1/4 - 14 x 5/8" (4 req'd.)

70" Outdoor Cabinet Dimensional Detail & Parts List
Motorola No. PEPS-18722-B
2/10/78-NPC

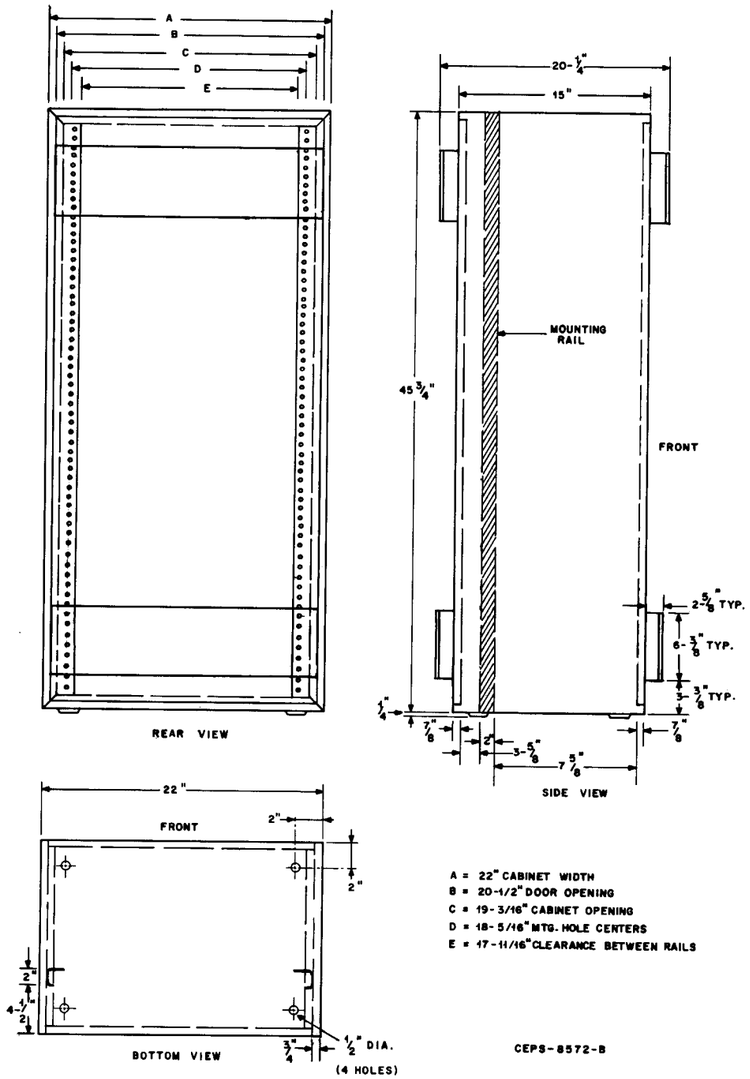

REFERENCE SYMBOL	MOTOROLA PART NO.	DESCRIPTION

PARTS LIST

TRN6448A Cabinet Hardware Kit — PL-3626-O

	2-836540 3-135499	SPEED NUT (4 req'd.) SCREW, tapping; 1/4 - 14 x 5/8" (4 req'd.)

THN6143A Cabinet (46-Inch) — PL-3625-B

	15-84144D08	CABINET, outdoor

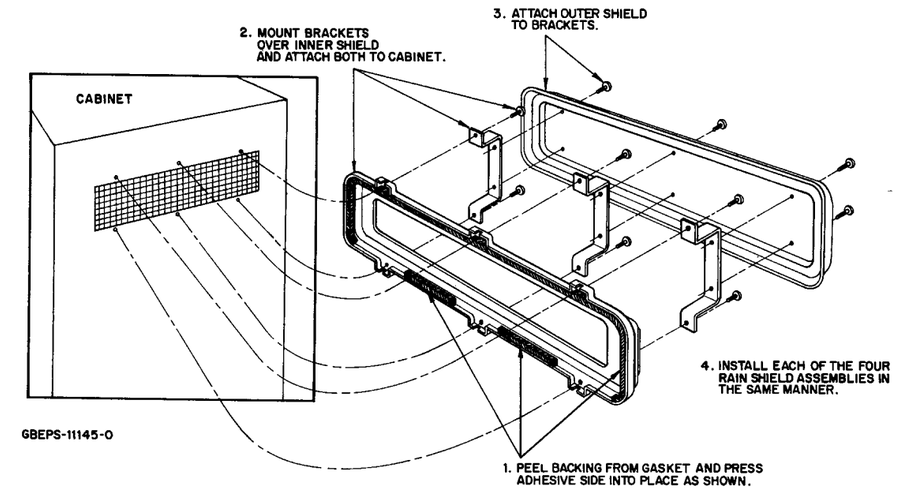

REFERENCE SYMBOL	MOTOROLA PART NO.	DESCRIPTION

PARTS LIST

TLN4862A Outdoor Vent Kit — PL-1797-A

	15-84188D01	COVER, outdoor vent (No. 1); 4 req'd
	15-84189D01	COVER, outdoor vent (No. 2); 4 req'd
	32-84452D01	GASKET: 4 req'd
	32-84452D02	GASKET: 8 req'd
	7-84187D01	BRACKET, vent cover: 12 req'd
	4-490775	FLATWASHER: 24 req'd
	4-9795	LOCKWASHER: 24 req'd
	3-138674	SCREW, machine: 6-32 x 11/16" 24 req'd
	3-138209	SCREW, tapping: 6-32 x 3/8" 24 req'd
	2-7005	NUT, hex: 6-32 x 1/4"; 24 req'd

46" Outdoor Cabinet with Outdoor Vent Kit
Dimensional Detail & Parts List
Motorola No. PEPS-18713-A
2/10/78-NPC

1. INTRODUCTION

This section contains maintenance instructions for the complete comparator package. Since the comparator operates unattended, all front panel controls and indicators are used for maintenance purposes. This section contains a table of recommended test equipment, intercom operating procedures, visual inspection, and adjustments. Additional maintenance data (such as dc voltage readings, ac signal levels, waveforms, etc.) for the power supply and plug-in modules are included in the appropriate sections of this manual.

2. RECOMMENDED TEST EQUIPMENT

Test equipment required for maintenance of the comparator is shown in Table 1.

3. INTERCOM OPERATION

3.1 GENERAL

The intercom permits two-way communications between the comparator and the communications control console operator and between the comparator and the voting receiver. Option C192 provides a TMN6067A Handset and a TKN6795A Cable Kit which are required for intercom operation.

3.2 INTERCOM BETWEEN COMPARATOR AND CONSOLE

To intercom with the console, plug the handset into J3 on the command module and depress the switch on the handset for both transmission and monitoring.

Table 1. Recommended Test Equipment

TYPE OF EQUIPMENT OR TYPE OF MEASUREMENT	EQUIPMENT CHARACTERISTICS	RECOMMENDED TYPE
Audio Voltage Measurements	High impedance (10 megohm); dBm scale	Motorola Model S1053 Solid-State AC Voltmeter
Audio Signal Generator for audio circuit testing	Variable amplitude 0 to 1 volt; 1000 Hz tone (300 to 3000 Hz preferred); sinusoidal wave	Motorola Model S1067 Solid-State Audio Oscillator Motorola Model TEK-1B Tone Oscillator
DC Voltage Measurements, Resistance Measurements	High impedance (11 megohm) dc multimeter	Motorola S1063 Solid-State DC Multimeter
Waveform Measurements	Oscilloscope: Audio circuit measurements	Dual Trace Oscilloscope

MOTOROLA INC.
Communications Division

service publications
1301 E. Algonquin Road, Schaumburg, IL 60196

7/6/78-NPC

68P81039E44-O

3.3 INTERCOM BETWEEN COMPARATOR AND RECEIVER

Both the TMN6067A Handset and the TKN6795A Cable Kit are required to intercom with the receiver.

Step 1. Remove the command module from the comparator chassis and connect jumper JU16 to test point A if not already there for 600-ohm termination (R62 across winding 6-10 of T1). Plug the command module back into the chassis.

Step 2. Plug the pair of phone plugs on one end of the cable kit into INTERCOM jacks J1 and J2 on the command module and the pair of phone plugs on the other end of the cable into the INTERCOM jack on the signal quality module for the receiver with which intercom is desired.

Step 3. Plug the handset into J3 on the command module and depress the switch on the handset for both transmission and monitoring.

NOTE

The LINE LEVEL control setting may be too low for intercom. If this is the case, increase the line level for intercom, then reset it to the required system level when intercom is complete.

Step 4. Upon completion of intercom, disconnect the handset and cable kit, remove the command module from the chassis, reconnect JU16 to its original position, and reset the LINE LEVEL control for the required system level (if the line level was changed for intercom).

4. VISUAL INSPECTION

Check all external surfaces of the equipment to see that they are clean. If the equipment is dirty, wash the external surfaces with soap and water using a clean cloth. Commercial spray or cleansers can also be used. Be careful! Never allow the electronic components or connectors to get wet. Check all connecting cables and audio lines for damage or loose connections.

5. FRONT PANEL CONTROLS AND INDICATORS

All controls and indicators are used for maintenance and adjustment of the comparator. Table 2 provides a list of these controls and indicators, along with their functions, and front panel are shown in Figure 1.

6. ADJUSTMENTS

6.1 LINE LEVEL ADJUSTMENT

6.1.1 Introduction

There are two basic reasons for observing correct line level settings; (1) to insure that maximum levels allowed by the phone company are not exceeded, and (2) to assure correct operation of the "Spectra TAC" equipment. The phone company will specify a maximum audio level on the phone line and the customer must specify the signal level rquired at the opposite end to determine the maximum line loss. In addition, for voice quality lines, the phone company may specify the maximum allowable power level. This is done to minimize crosstalk and equipment overloading. The maximum power level is determined by averaging the audio signal level over a 3-second period. Due to the pauses between speech syllables and words, the 3-second average will be in most cases, a power level 13 dB below the peak level of voice. The allowable peak level of voice is specified by the phone company as the Transmission Level Point (TLP). A 1000 Hz tone at full system deviation (± 5 kHz) is recommended for setting the line level.

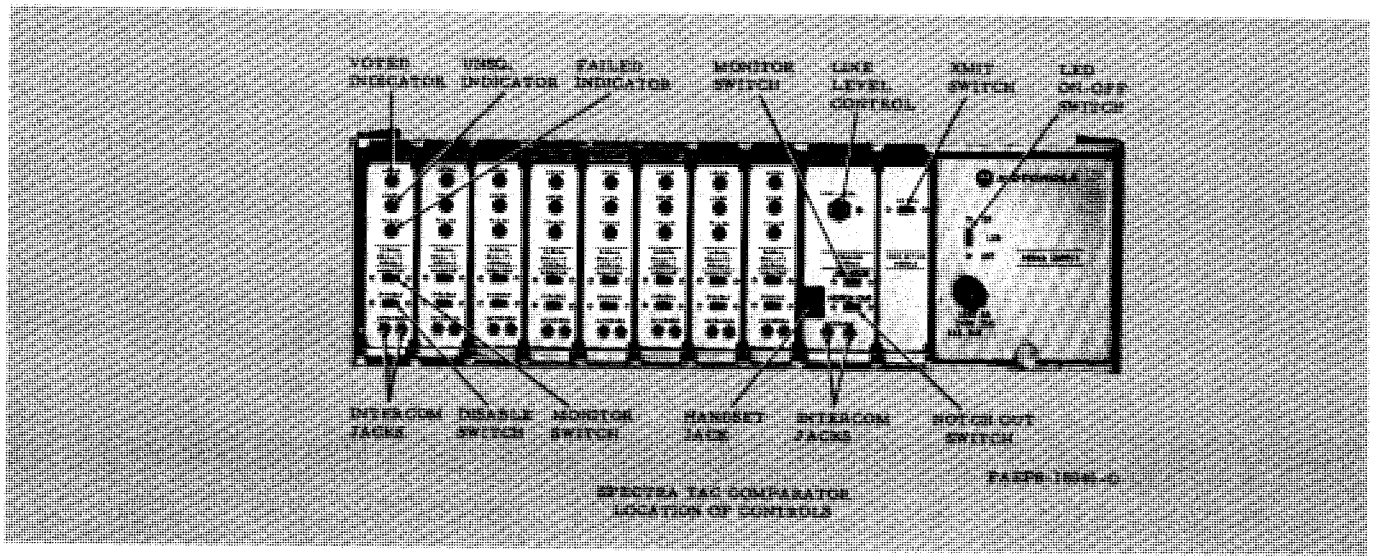

Figure 1. Front Panel Controls and Indicators

Table 2. Controls and Indicators

NAME	FUNCTION
SIGNAL QUALITY MODULE	
VOTED indicator	Indicates that the associated receiver has been voted or selected for monitor.
UNSQ. indicator	Indicates that the associated receiver is unsquelched.
FAIL indicator	Indicates that the associated receiver has failed or has been disabled.
MONITOR switch	Enables audio to the audio bus.
DISABLE switch	Disables the signal quality module.
COMMAND MODULE	
LINE LEVEL control	Sets the audio output line level.
NOTCH OUT switch	Bypasses the notch filter.
MONITOR switch	Unmutes the command module.
TONE KEYING MODULE	
XMIT switch	Momentary switch which enables the transmitter.
DC KEYING MODULE	
XMIT switch	Momentary switch which enables the transmitter.
CUR ADG control	Screwdriver control on the circuit board for setting transmitter keying current level.
POWER SUPPLY	
LED ON-OFF switch	Removes A+ from SW+ bus on interconnect board (disables all LED indicators).
120-240 V switch	Connects power transformer primary for either 120 V or 240 V ac power source.
+13.8 V ADJ control	Screwdriver control for setting power supply output voltage.

6.1.2 Procedure

One of two methods may be used for setting the line level. The recommended method is to set the receiver line level, then, with this input, setting the comparator output line level. An alternate method is to use the status tone from a "Spectra TAC" receiver.

6.1.2.1 Recommended Method

Step 1. Connect an ac voltmeter to the MON AUD (+) and (-) screw terminals on the interconnect board.

Step 2. Set the receiver line level as described in the "Spectra TAC" receiver instruction manual. Remove rf signal from the receiver to send status tone. A proper input to the comparator is a status tone between -25 and 0 dBm in 0 dB systems and between -38 and -13 dBm in -13 dB systems.

Step 3. Apply the rf signal modulated with 1 kHz at 5 kHz deviation to the receiver.

Step 4. Set the LINE LEVEL control on the command module for the maximum allowable signal level permitted on the line. If the specified maximum is the maximum allowable *power* (3 second average), then set the LINE LEVEL control for 13 dB above this level. The output should not exceed +11 dBm.

Step 5. Disconnect the ac voltmeter and the rf signal generator.

6.1.2.2 Alternate Method

Step 1. Connect an ac voltmeter to the MON AUD (+) and (-) screw terminals on the interconnect board.

Step 2. Set the NOTCH OUT and MONITOR switches on the command module and the MONITOR switch on one signal quality module to the right (on position).

NOTE

When there is no received signal, the receiver puts a status tone on the line. This status tone is used for this method of setting the comparator output line level.

Step 3. While the status tone is present (no received signal at the receiver), set the LINE LEVEL control on the command module for the maximum allowable level permitted on the line. If the specified maximum is the maximum allowable *power* (3 second average), then set the LINE LEVEL control for 13 dB above this level. The output should not exceed +11 dBm.

NOTE

This step is the same for 0 dB and -13 dB systems.

Step 4. Set the NOTCH OUT and MONITOR switches to the left (off position) and disconnect the ac voltmeter.

6.2 DC KEYING CURRENT ADJUSTMENT

WARNING

High voltages exist on the dc line current terminals (DC+ and DC-) when the vote indicate bus is low (VOTED indicator on). Disable the dc keying module by unplugging it from the comparator chassis when making connections to the dc control lines.

Step 1. Remove the dc keying module from the comparator chassis.

Step 2. Connect a dc milliameter between the DC+ and DC- terminals on the comparator interconnect board. (It is not necessary to connect the meter in series with the line since the line current is provided by a constant current source.)

Step 3. Plug a module extender card into the dc keying module slot in the comparator and plug the module into the extender card.

Step 4. Hold the XMIT switch to the right and adjust the CUR ADJ control on the dc keying module for the proper transmitter keying current (normally +5.5 mA for F1 or +12.5 mA for F2) as indicated on the milliameter.

Step 5. Remove the dc keying module and module extender card from the comparator chassis.

Step 6. Disconnect the dc milliameter.

Step 7. Plug the dc keying module into the comparator chassis.

NOTE

If the transmitter does not key when the current level is adjusted, the polarity of the dc control lines may be reversed.

6.3 POWER SUPPLY ADJUSTMENT

The dc output of the power supply is set for 13.8 volts using the +13.8 V ADJ control on the regulator board. Access to the +13.8 V ADJ control is through a hole in the top of the comparator chassis above the power supply. Connect a dc voltmeter to the A+ and GND screw terminals on the interconnect board and set the +13.8 V ADJ control for 13.8 V.

NOTE

When additional comparator chassis are used for additional signal quality modules (9 through 24 inputs), the power supplies on all chassis must be set for same dc level to insure proper voting.

6.4 SECONDARY LINE DRIVER MODULE ADJUSTMENTS

6.4.1 Line Level Adjustment

Step 1. With the secondary line driver inserted in the comparator interconnect chassis, adjust the command module output levels as described in the line level adjustment paragraph in the maintenance section of this manual.

Step 2. Enable the MONITOR switch on the signal quality module and the NOTCH OUT switch on the command module.

Step 3. Connect an ac voltmeter across the existing telephone line connection for the secondary line driver.

NOTE

When there is no received signal, the receiver puts a status tone on the line. This status tone is used for this method of setting the comparator output line level.

Step 4. Using the level adjust on the secondary line driver, adjust the output of the module to the maximum allowable phone line level. If the specified maximum is the maximum allowable *power* (3 second average) then set the level control for 13 dB above this level. The output should not exceed +11 dBm.

NOTE

This step is the same for 0 dB and -13 dB systems.

Step 5. Return all switches to their original positions, and disconnect the meter.

6.4.2 Status Tone Level Adjustment (Secondary Encoder Applications)

Step 1. Check the jumper arrangement to insure that the module is operating as a secondary encoder.

Step 2. Perform line level setting procedures as described in paragraph 6.4.1 above.

Step 3. With the comparator in its "idle" state, adjust the level of the status tone (2175 Hz) using the status tone level adjustment (R67) which is mounted on the circuit board.

Step 4. Connect an ac voltmeter across the existing telephone line, adjust the status tone amplitude to be equal to the line level in 0 dB systems and 13 dB below the line level for -13 dB systems.

6.4.3 Line Equalization Adjustment

6.4.3.1 General

The purpose of the line equalization procedure is to ensure sufficient audio gain to compensate for line

losses to the termination point. Two men are required to perform this procedure; one man, at the comparator site, measures the output of the secondary line driver while the man at the termination point measures the input to remote equipment. Line equalization is performed by sending HIGH, LOW, and REF test tones generated within the secondary line driver and adding gain at the HIGH and LOW frequencies to equal the gain at REF frequency.

6.4.3.2 Procedure

Step 1. Establish communications between both sites.

Step 2. At the termination point, connect an ac VTVM across the line (+) and (-) terminals. At the comparator site, connect an ac VTVM across the line (+) and (-) terminals of the secondary line driver on the comparator interconnect board.

Step 3. At the comparator site, place the secondary line driver module on the board extender and connect the equalization jumpers to the 0 dB positions.

Step 4. At the comparator site, insure that the signal quality modules are in an idle state.

Step 5. Set and hold S3 to the REF (1 kHz) position.

Step 6. At the termination point, measure and record (in dB) the 1 kHz line level. Release S3.

Step 7. At the comparator site, set and hold S2 to the HIGH (2500 Hz) position.

Step 8. At the termination point, measure the line level in dB. Compare this level with the level recorded at 1 kHz. Inform the man at the comparator site of the difference. Release S2.

Step 9. At the comparator site, connect the 2500 Hz equalization jumper to the position closest to the difference measured in Step 8.

Step 10. At the comparator site set and hold S1 to the LOW (400 Hz) position.

Step 11. Repeat Steps 8 and 9 for the 400 Hz tone. Release S1.

Step 12. Disconnect all test equipment.

6.5 TONE PRIORITY MODULE ADJUSTMENTS

Level adjustments are provided for both audio paths. For proper operation, these levels must be balanced to maximum output allowed.

Step 1. Connect an ac voltmeter to the existing telephone line connections of the tone priority module.

Step 2. Preset R15 to the maximum counterclockwise position, the NOTCH OUT switch (on command module) to the right, and a MONITOR switch (on any signal quality module) to the right.

Step 3. Adjust LINE-LEVEL control R13 on the tone priority module for the maximum allowable level permitted on the line. If the specified maximum is the maximum allowable *power* (3 second average), then set the LINE-LEVEL control for 13 dB above this level. The output should not exceed + 11 dBm. Record this level.

Step 4. Return the switches set in Step 2 to the left side.

Step 5. Send a steady high level guard tone from the console or produce an equivalent level of 2175 Hz equal to 100% modulation at the console input terminals to the tone priority module and adjust INPUT ADJ control R15 on the tone priority module for the same level recorded in Step 4 as indicated on the ac voltmeter.

7. SERVICE AIDS

7.1 TUNING TOOL

The pot core tuning tool, Motorola Part No. 66-84320K02, is used for adjustment of the status tone frequency.

7.2 EXTENDER BOARD

An extender board, Motorola Part No. 1-80700B25, perimts access to a plug-in module while it is still electrically connected to the main unit.

COMPARATOR INTERCONNECT CHASSIS

MODEL TLN1726A

DESCRIPTION

The comparator interconnect chassis provides mounting and interconnect facilities for up to eight signal quality modules, a command module, an optional tone or dc keying module, and a power supply. One comparator chassis provides complete voting facilities for up to eight receiver inputs unless an optional secondary line driver or tone priority module is used.

The TLN1726A Comparator Interconnect Chassis consists of a TRN6111A Chassis and Hardware Kit and a TRN6099A Interconnect Board (see Figure 1). The power supply mounts in the right hand side of the housing and, progressing from right to left, the optional tone or dc keying module, the command module, and up to eight signal quality modules. The optional secondary line driver or tone priority module, when used, are located to the left of the command module. Module guide rails are mounted on the inside top and bottom of the housing and homing guides on the interconnect board to guide the modules into position and to mate with connector pins.

The power supply and all external connections are made to screw terminals on the rear of the interconnect board (see Figure 1). Observe proper polarity as marked on the interconnect board when making connections.

MOTOROLA INC.
Communications Division

service publications
1301 E. Algonquin Road, Schaumburg, IL 60196

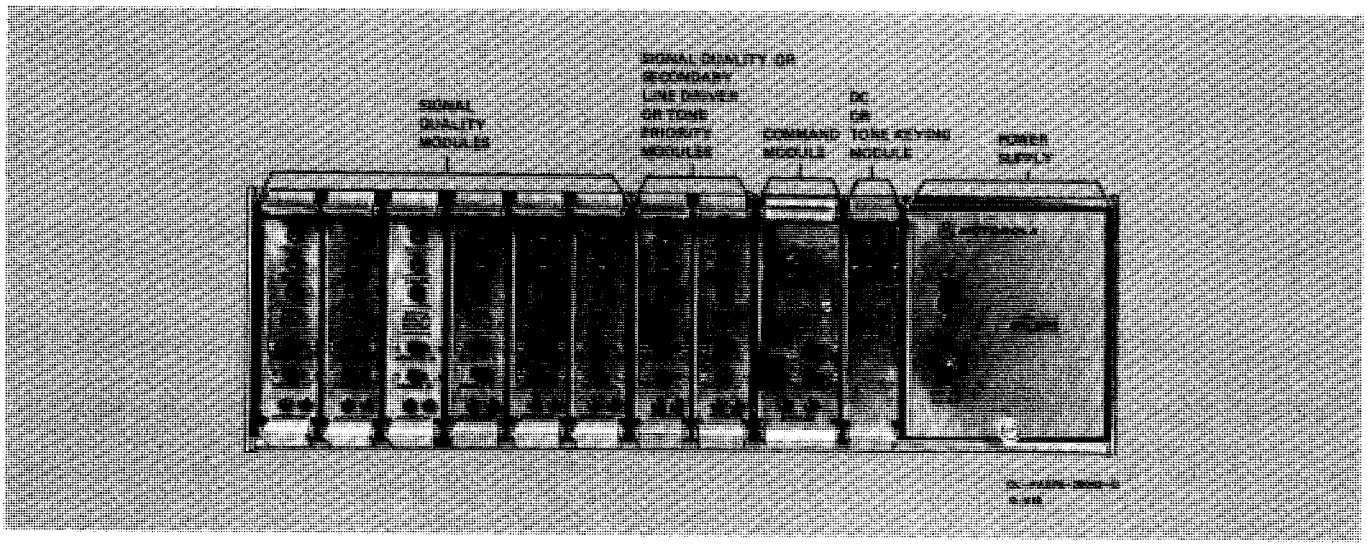

FRONT VIEW

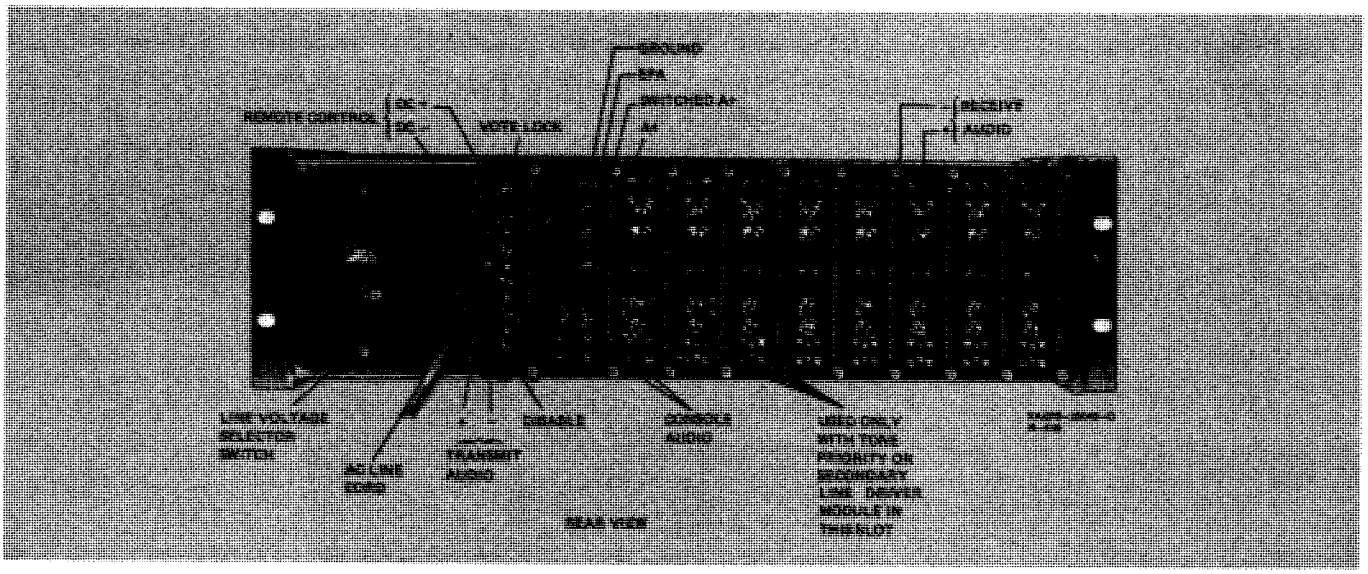

REAR VIEW

Figure 1. Comparator Interconnect Chassis

FUNCTION	SIGNAL QUALITY MODULE	TONE PRIORITY MODULE (OPTIONAL)	SECONDARY LINE DRIVER MODULE (OPTIONAL)	COMMAND MODULE	TONE OR DC KEYING MODULE
GROUND	1	1	1	1	1
AGC OUTPUT	2				
RELAY (N.C.)				2	
RELAY (COM)				3	
RELAY (N.O.)				4	
INPUT (+)	3				
INPUT (–)	4				
XMIT AUDIO OUT		3			
XMIT AUDIO OUT		4			
LINE AUDIO			2		
LINE OUT			3		
LINE OUT			4		
EMERG PWR ALERT (EPA)	5			5	5
VOTED AUDIO BUS	6			6	
VOTE LOCKUP	7			7	
REFERENCE BUS	8	8		8	
CONSOLE MUTE					7,8
SW A+	9	9			9
AUX AUDIO IN				9	
TONE OUT					10
TONE IN		11	11	10	
VOTED AUDIO IN		10	10		
UNSQUELCH INDICATE	11			9	
MUTE SWITCH		18		11	11
A–	12	12	12	12	12
FUNCTION TONE TUNE	13			13	13
NOTCH CONTROL BUS	14			14	
VOTE INDICATE BUS	15	15	15	15	15
DROPOUT DELAY BUS	16	16	16	16	16
LINE AUDIO	17			17	17
QUALITY INDICATE	18				
DC (+)				18	18
DC (–)				19	19
MODULE DISABLE	19				
CONSOLE IN (+)		19			
CONSOLE IN (–)		20			
VOTE INDICATE	20				
MONITOR AUDIO (+)				20	22
MONITOR AUDIO (–)				21	23
SWITCHED AUDIO (LA+)					20
SWITCHED AUDIO (LA–)					21
PRIORITY MOD. 2 DISABLE		21			
INHIBIT		22			
RELAY (N.O.)				22	
RELAY (COM)				23	
RELAY (N.C.)				24	
FAILED INDICATE	23				
DISABLE		23	23		24
FAILED BUS	24				

EPS-21193-O

NOTES:

1. THE QUANTITY OF SIGNAL QUALITY MODULES SUPPLIED DEPENDS ON SYSTEM REQUIREMENTS. THE SPARK GAPS ARE SUPPLIED WITH EACH SIGNAL QUALITY MODULE. THESE SPARK GAPS MUST BE INSTALLED FROM THE (+) AND (–) INPUT LINES AS SHOWN FOR EACH INPUT USED.

2. JUMPERS JU1 AND JU2 ARE CUT WHEN OPTIONAL RELAY IS USED ON THE TONE OR DC KEYING MODULE.

3. SPARK GAPS MUST BE USED FOR ALL TELEPHONE LINES CONNECTED TO THE COMPARATOR.

4. WHEN TWO TONE PRIORITY MODULES ARE USED, THE MODULE IN SLOT 8 IS USED FOR A SIMPLEX CONSOLE AND THE SECOND MODULE IN SLOT 7 IS USED FOR A DUPLEX CONSOLE.

5. JUMPER USAGE IS GIVEN IN TABLE 1.

TABLE 1. JUMPER USAGE

JUMPER	USAGE
JU1	NORMALLY IN, OUT WHEN OPTIONAL RELAY IS USED ON TONE OR DC KEYING MODULE.
JU2	NORMALLY IN, OUT WHEN OPTIONAL RELAY IS USED ON TONE OR DC KEYING MODULE.
JU3	NORMALLY OUT, IN WHEN TONE PRIORITY MODULE IS USED WITH SIMPLEX CONSOLE (FIELD INSTALLED)
JU4	NORMALLY OUT, IN WHEN TONE PRIORITY MODULE IS USED WITH SIMPLEX CONSOLE (FIELD INSTALLED)
JU5	NORMALLY OUT, IN WHEN TONE PRIORITY MODULE IS USED.
JU6	NORMALLY OUT, IN WHEN 2ND TONE PRIORITY MODULE IS USED.
JU7	NORMALLY OUT, IN WHEN TONE PRIORITY MODULE ISSUSED.
JU8	NORMALLY OUT, IN WHEN 2ND TONE PRIORITY MODULE IS USED.
JU9	NORMALLY OUT, IN FOR SPECIAL APPLICATIONS.
JU10	NORMALLY OUT, IN FOR SPECIAL APPLICATIONS.
JU11	NORMALLY OUT, IN FOR SPECIAL APPLICATIONS.
JU12	NORMALLY OUT, IN FOR SPECIAL APPLICATIONS.
JU13	NORMALLY OUT, IN FOR SPECIAL APPLICATIONS.
JU14	NORMALLY OUT, IN FOR SPECIAL APPLICATIONS.
JU15	NORMALLY OUT, IN FOR SPECIAL APPLICATIONS.
JU16	NORMALLY OUT, IN FOR SPECIAL APPLICATIONS.
JU17	NORMALLY OUT, IN FOR SPECIAL APPLICATIONS.
JU18	NORMALLY OUT, IN FOR SPECIAL APPLICATIONS.
JU19	NORMALLY OUT, IN FOR SPECIAL APPLICATIONS.
JU20	NORMALLY OUT, IN FOR SPECIAL APPLICATIONS.
JU21	NORMALLY OUT, IN WHEN 2ND TONE PRIORITY OR 2ND SECONDARY LINE DRIVER MODULE IS USED.
JU22	NORMALLY OUT, IN WHEN TONE PRIORITY OR SECONDARY LINE DRIVER MODULE IS USEID.
JU23	NORMALLY IN, OUT WHEN TONE PRIORITY OR SECONDARY LINE DRIVER MODULE IS USEID.

EPS-21192-A

LATER VERSION

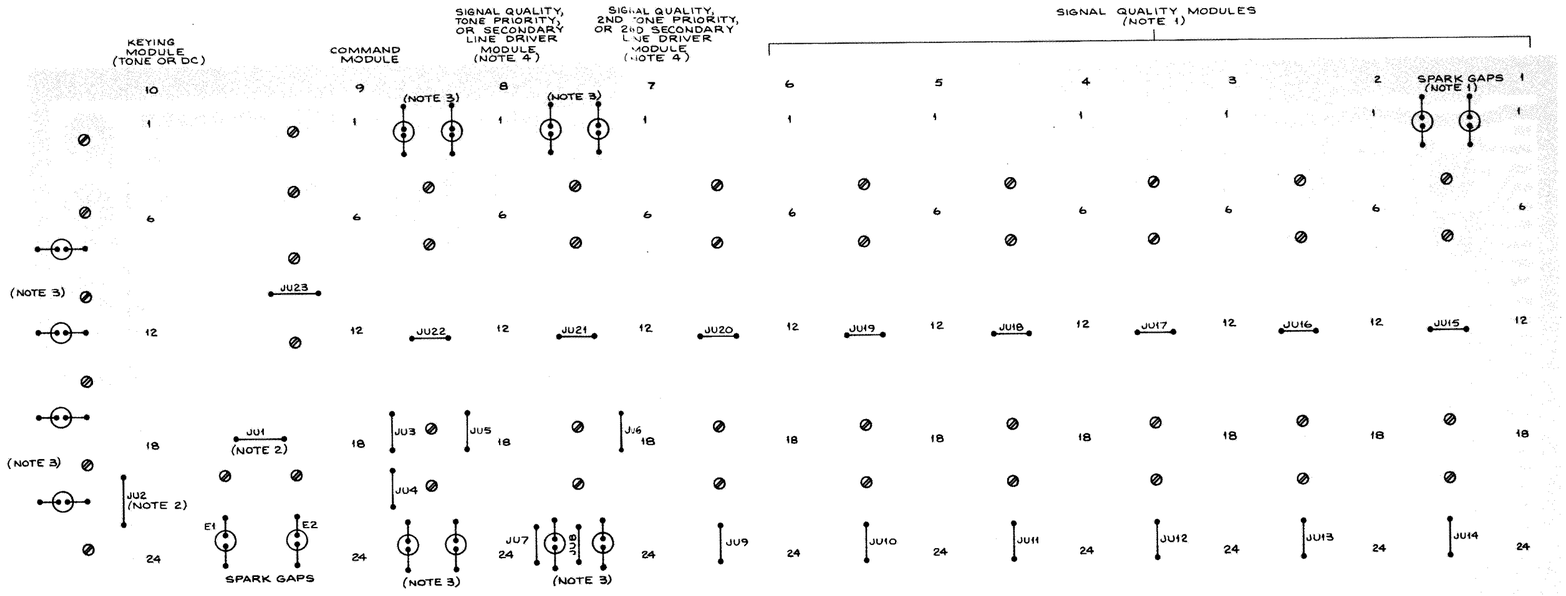

SHOWN FROM SOLDER SIDE

80-DEPS-20225-A
OL-DEPS-20226-B

REFERENCE SYMBOL	MOTOROLA PART NO.	DESCRIPTION

PARTS LIST

TRN6111A Comparator Chassis Kit (P/O TLN1726A) PL-3582-A

	45-83914G01	RAILS, guide: 8 req'd.
	46-84257K01	GUIDE, homing: 10 req'd.
	3-134184	SCREW; 20 req'd.
	54-84404K01	CHASSIS LABEL: 1 req'd.
	1-80780B99	CHASSIS ASSEMBLY (riveted) includes:
		15-84569L01 COVER, top
		15-84570L01 COVER, bottom
		7-83189H01 BRACKET, support
		15-84377D01 HOUSING END
		15-84377D02 HOUSING END

TRN6099A Comparator Interconnect Board (P/O TLN1726A) PL-3583-O

E1, 2	80-83029H01	SPARK GAP: 230 V dc ±15%
NON-REFERENCED ITEM		
	1-80780B87	CIRCUIT BOARD ASSY. incl: 29-84028H09 TERMINAL, male: 240 req'd. 29-83362G01 TERMINAL, screw: 27 req'd. 3-1976 SCREW, machine: 6-32 x 5/16"; 27 req'd.

TRN6099A Comparator Interconnect Board Circuit Board Detail Motorola No. PEPS-21194-B 2/10/78-NPC

EARLIER VERSION

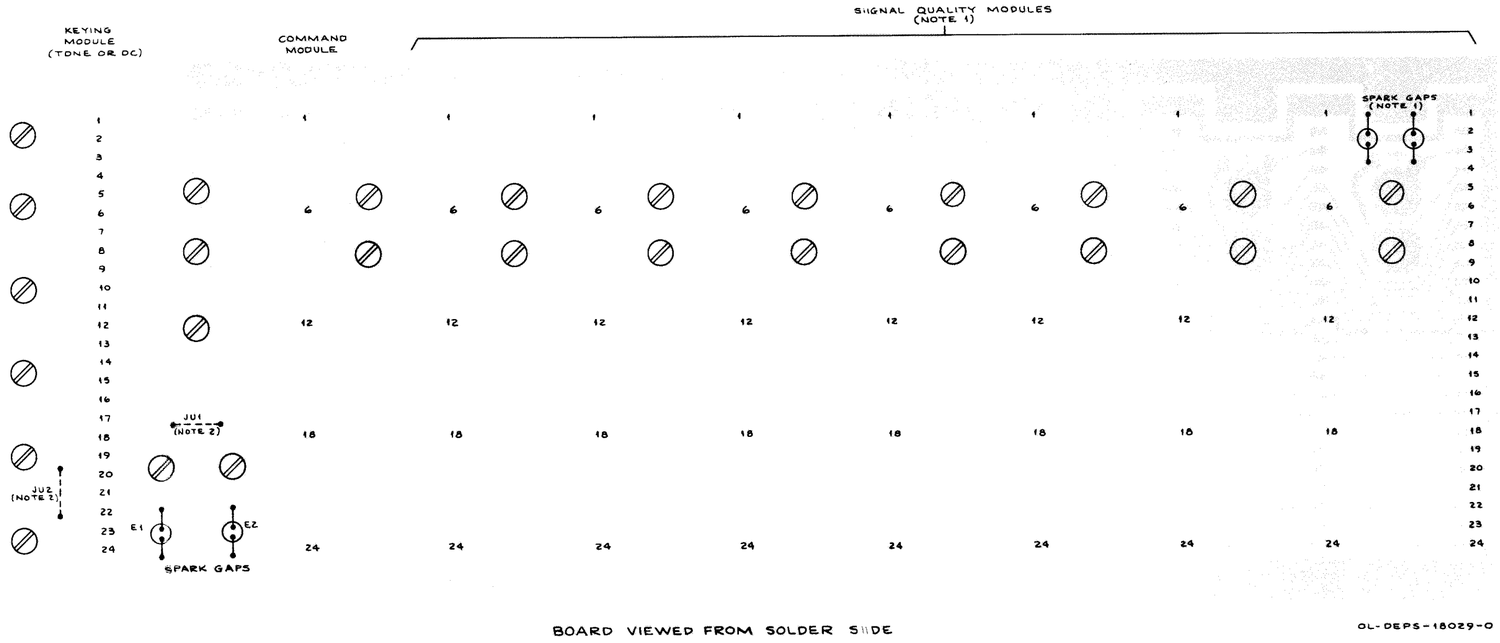

NOTES:

1. THE QUANTITY OF SIGNAL QUALITY MODULES SUPPLIED DEPENDS ON SYSTEM REQUIREMENTS. TWO SPARK GAPS ARE SUPPLIED WITH EACH SIGNAL QUALITY MODULE. THESE SPARK GAPS MUST BE INSTALLED FROM THE (+) AND (–) INPUT LINES AS SHOWN FOR EACH INPUT USED.

2. JUMPERS JU1 AND JU2 ARE CUT WHEN OPTIONAL RELAY IS USED ON THE TONE OR DC KEYING MODULE.

FUNCTION INTERCONNECT CHART

FUNCTION	SIGNAL QUALITY MODULE	COMMAND MODULE	TONE OR DC KEYING MODULE
GROUND	1	1	1
AGC OUTPUT	2		
RELAY (N.C.)		2	
RELAY (COM)		3	
RELAY (N.O.)		4	
INPUT (+)	3		
INPUT (-)	4		
EMERG PWR ALERT (EPA)	5	5	5
VOTED AUDIO BUS	6	6	
VOTE LOCKUP	7	7	
CONSOLE MUTE			7, 8
REFERENCE BUS	8	8	
SW A+ FOR LEDS	9		9
AUX AUDIO INPUT	10	9	
TONE IN		10	
TONE OUT			10
UNSQUELCH INDICATE	11		
MUTE SWITCH		11	11
A+	12	12	12
FUNCTION TONE TUNE	13	13	13
NOTCH CONTROL BUS	14	14	
VOTE INDICATE BUS	15	15	15
DROPOUT DELAY BUS	16	16	16
LINE AUDIO	17	17	17
QUALITY INDICATE	18		
DC (+)		18	18
DC (-)		19	19
MODULE DISABLE	19		
VOTE INDICATE	20		
MONITOR AUDIO (+)		20	22
MONITOR AUDIO (-)		21	23
SWITCHED AUDIO (LA +			20
SWITCHED AUDIO (LA -			21
RELAY (N.O.)		22	
RELAY (COM)		23	
RELAY (N.C.)		24	
FAILED INDICATE	23		
FAILED BUS	24		
COMPARATOR DISABLE		24	24

EPS-18027-O

TRN6099A Comparator Interconnect Board
Circuit Board Detail
Motorola No. PEPS-18163-A
2/10/78-NPC

SIGNAL QUALITY MODULE

MODEL TLN1718B

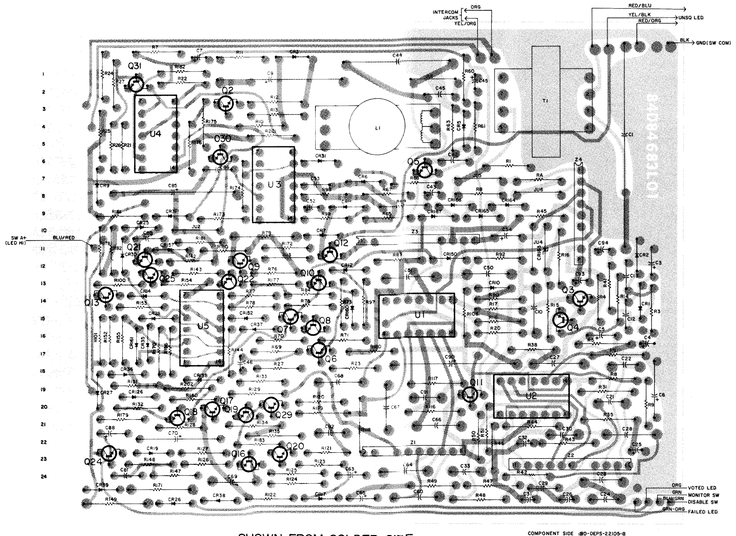

SHOWN FROM SOLDER SIDE

COMPONENT SIDE -BD-DEPS-22-D5-B
SOLDER SIDE -SD-DEPS-22-D4-B
OL-DEPS-22-D6-C

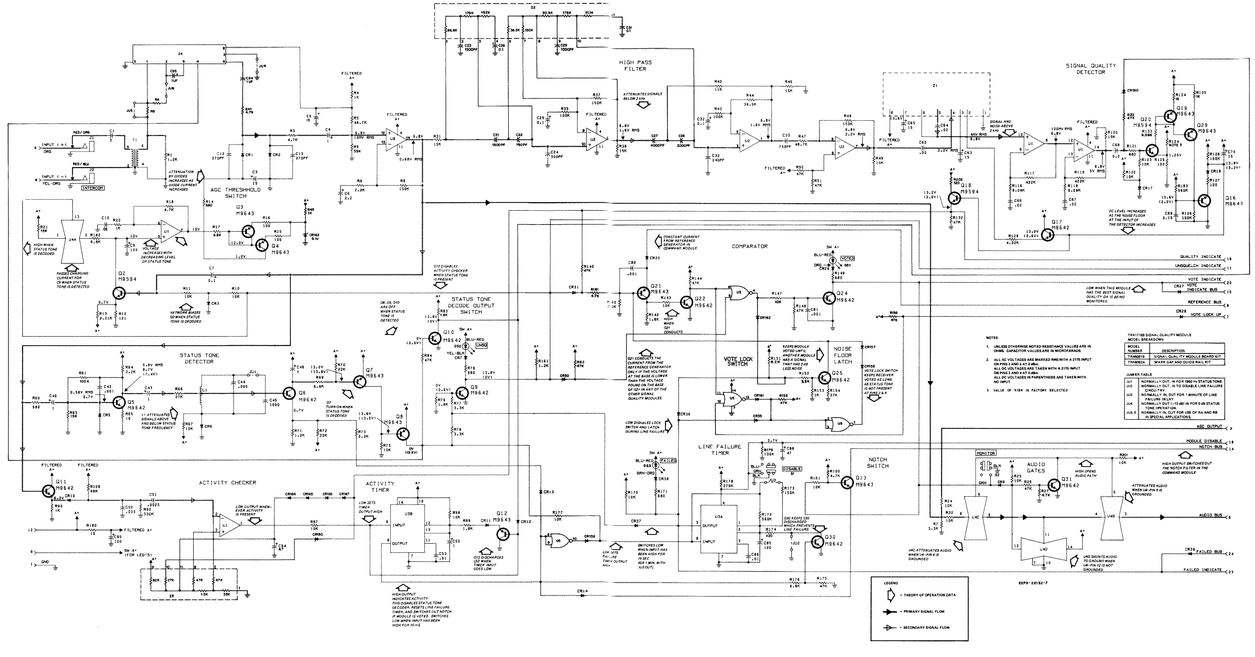

FUNCTION

Determines noise level of signal and compares it to noise level measured on other receiver lines. Routes receiver audio to the command module when the receiver is voted. Detects failure of the receiver line.

TLN1718B SIGNAL QUALITY MODULE TROUBLESHOOTING CHART

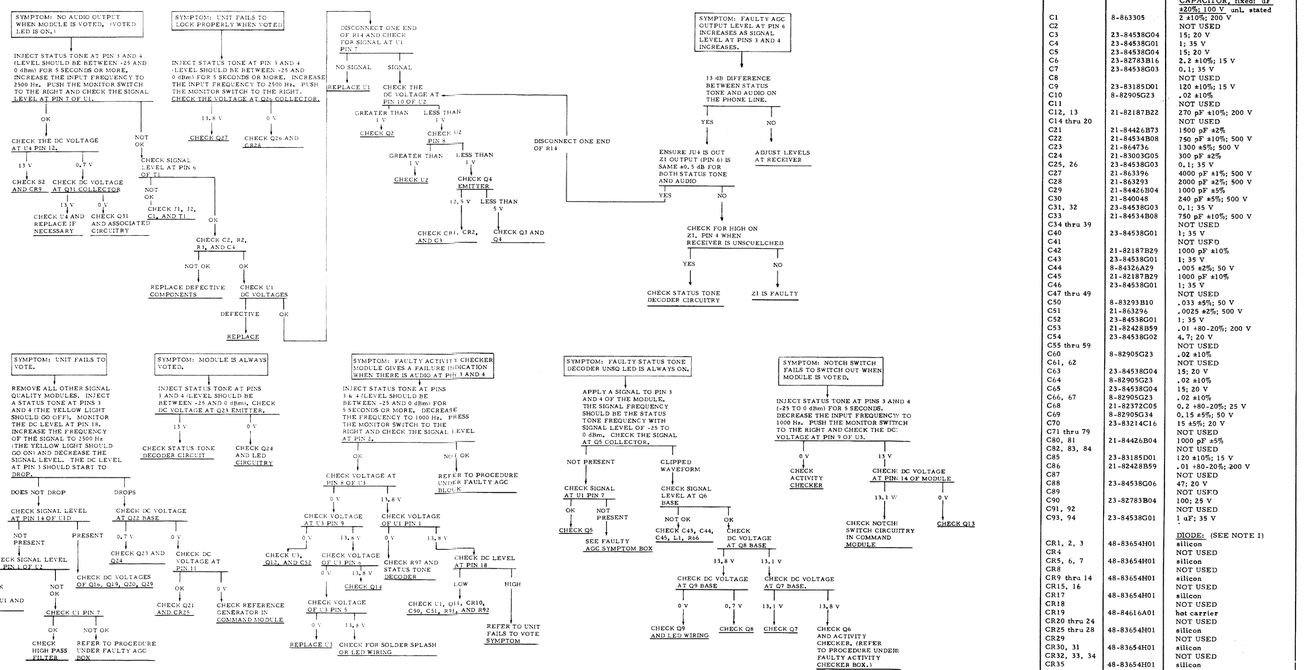

EPS-22222-A

PARTS LIST

TRN6091B Signal Quality Module
(P/O TLN1718B)

PL-5045-E

REFERENCE SYMBOL	MOTOROLA PART NO.	DESCRIPTION
		CAPACITOR, fixed: uF ±20%; 100 V unl. stated
C1	8-863305	2 ±10%; 200 V
C2		NOT USED
C3	23-84538G04	15; 20 V
C4	23-84538G01	1; 35 V
C5	23-84538R04	15; 20 V
C6	23-82783B16	2.2 ±10%; 15 V
C7	23-84538G01	0.1; 35 V
C8		NOT USED
C9	23-83185D01	120 ±10%; 15 V
C10	8-82905G23	.02 ±10%
C11		NOT USED
C12, 13	21-82187B22	270 pF ±10%; 200 V
C14 thru 20		NOT USED
C21	21-8442cB73	150 pF ±2%
C22	21-84534B08	750 pF ±10%; 500 V
C23	21-864736	1300 ±5%; 500 V
C24	21-83003G05	300 pF ±2%
C25, 26	23-84538G03	0.1; 35 V
C27	21-863396	4000 pF ±1%; 500 V
C28	21-863293	2000 pF ±2%; 500 V
C29	21-8442cB04	1000 pF ±5%
C30	21-840048	240 pF ±5%; 500 V
C31, 32	23-84538G03	0.1; 35 V
C33	21-84534B08	750 pF ±10%; 500 V
C34 thru 39		NOT USED
C40	23-84538G01	1; 35 V
C41		NOT USED
C42	21-82187B29	1000 pF ±10%
C43	23-84538G01	1; 35 V
C44	8-84326A29	.005 ±2%; 50 V
C45	21-82187B29	1000 pF ±10%
C46	23-84538G01	1; 35 V
C47 thru 49		NOT USED
C50	8-83293B10	.033 ±5%; 50 V
C51	21-863296	.0025 ±2%; 500 V
C52	23-84538G01	1; 35 V
C53	21-82428B59	.01 +80-20%; 200 V
C54	23-84538G02	4.7; 20 V
C55 thru 59		NOT USED
C60	8-82905G23	.02 ±10%
C61, 62		NOT USED
C63	23-84538G04	15; 20 V
C64	8-82905G23	.02 ±10%
C65	23-84538G04	15; 20 V
C66, 67	8-82905G23	.02 ±10%
C68	21-82372C05	0.2 +80-20%; 25 V
C69	8-82905G34	0.15 ±5%; 50 V
C70	23-83214C16	15 ±5%; 20 V
C71 thru 79		NOT USED
C80, 81	21-84426B04	1000 pF ±5%
C82, 83, 84		NOT USED
C85	23-83185D01	120 ±10%; 15 V
C86	21-82428B59	.01 +80-20%; 200 V
C87		NOT USED
C88	23-84538G06	47; 20 V
C89		NOT USED
C90	23-82783B04	100; 25 V
C91, 92		NOT USED
C93, 94	23-84538G01	1 uF; 35 V
		DIODE: (SEE NOTE 1)
CR1, 2, 3	48-83654H01	silicon
CR4		NOT USED
CR5, 6, 7	48-83654H01	silicon
CR8		NOT USED
CR9 thru 14	48-83654H01	silicon
CR15, 16		NOT USED
CR17	48-83654H01	silicon
CR18		NOT USED
CR19	48-84616A01	hot carrier
CR20 thru 24		NOT USED
CR25 thru 28	48-83654H01	silicon
CR29		NOT USED
CR30, 31	48-83654H01	silicon
CR32, 33, 34		NOT USED
CR35	48-83654H01	silicon
CR36		NOT USED
CR37, 38, 39	48-83654H01	silicon
CR40 thru 149		NOT USED
CR150	48-83654H01	silicon
CR151		NOT USED

REFERENCE SYMBOL	MOTOROLA PART NO.	DESCRIPTION
CR152	48-83654H01	silicon
CR153 thru 156		NOT USED
CR157, 158	48-83654H01	silicon
CR159		NOT USED
CR160, 161, 162	48-83654H01	silicon
CR163	48-8256C18	Zener; 9.1 V
CR164 thru 167	48-83654H01	silicon
		LIGHT EMITTING DIODE:
DS1	48-88245C10	green
DS2	48-88245C09	yellow
DS3	48-88245C08	red
		CONNECTOR:
J1, 2	9-82684D01	micro-jack
		COIL ASSEMBLY:
L1	1-80702B11	1 H; includes 42-84315A01 CLIP, grounding
		TRANSISTOR: (SEE NOTE 1)
Q1		NOT USED
Q2	48-869594	NPN; type M9594
Q3, 4	48-869643	PNP; type M9643
Q5, 6	48-869642	NPN; type M9642
Q7, 8	48-869643	PNP; type M9643
Q9, 10, 11	48-869642	NPN; type M9642
Q12, 13	48-869643	PNP; type M9643
Q14, 15		NOT USED
Q16	48-869643	PNP; type M9643
Q17	48-869642	NPN; type M9642
Q18	48-869594	NPN; type M9594
Q19	48-869643	PNP; type M9643
Q20	48-869594	NPN; type M9594
Q21	48-869643	PNP; type M9643
Q22	48-869642	NPN; type M9642
Q23		NOT USED
Q24, 25	48-869642	NPN; type M9642
Q26, 27, 28		NOT USED
Q29	48-869643	PNP; type M9643
Q30, 31	48-869642	NPN; type M9642
		RESISTOR, fixed: ±5%; 1/4 W; unless otherwise stated
R1	6-124A51	1.2k
R2		NOT USED
R3	6-124A65	4.7k
R4	6-124A49	1k
R5	6-10621D58	48.7k ±1%; 1/8 W
R6	6-10621D66	59.0k ±1%; 1/8 W
R7	6-124A61	3.3k
R8	6-124B02	150k
R9	6-124A57	2.2k
R10, 11	6-124A73	10k
R12	6-10621B06	121 ±1%; 1/8 W
R13	6-10621C28	2.21k ±1%; 1/8 W
R14	6-124A45	680
R15, 16	6-10621A97	100 ±1%; 1/8 W
R17	6-124A69	6.8k
R18	6-124A65	4.7k
R19		NOT USED
R20	6-124A49	1k
R21	6-124A77	15k
R22	6-124A73	10k
R23	6-124A89	47k
R24, 25	6-124A73	10k
R26	6-124A89	47k
R28, 29, 30	6-124A65	4.7k
R31	6-10621D09	NOT USED 15k ±1%; 1/8 W
R32, 33, 34		NOT USED
R35	6-10621D88	100k ±1%; 1/8 W
R36		NOT USED
R37	6-10621E06	150k ±1%; 1/8 W
R38	6-124A77	15k
R39, 40		NOT USED
R41	6-124A65	4.7k
R42	6-124A74	11k
R43	6-10621D88	100k ±1%; 1/8 W
R44	6-10621D46	36.5k ±1%; 1/8 W
R45	6-124A49	1k
R46	6-124A77	15k

REFERENCE SYMBOL	MOTOROLA PART NO.	DESCRIPTION
R47	6-10621D58	48.7k ±1%; 1/8 W
R48	6-10621E06	150k ±1%; 1/8 W
R49	6-124A77	15k
R50, 51	6-124A89	47k
R52 thru 59		NOT USED
R60	6-124A45	680
R61	6-124A97	100k
R62		NOT USED
R63	6-124A77	15k
R64	6-124A57	2.2k
R65	6-124A01	10
R66	6-124A83	27k
R67	6-124A73	10k
R68		NOT USED
R69	6-124A69	6.8k
R70	6-124A81	22k
R71	6-124A51	1.2k
R72	6-124A81	22k
R73	6-124A57	2.2k
R74		NOT USED
R75	6-124A73	10k
R76	6-124A55	1.8k
R77, 78	6-124A61	3.3k
R79	6-124C45	680 ±10%; 1/2 W
R80, 81		NOT USED
R82	6-124A89	47k
R83	6-124A55	1.8k
R84	6-124A89	47k
R85 thru 89		NOT USED
R90	6-124A49	1k
R91		NOT USED
R92	6-124B10	330k
R93 thru 96		NOT USED
R97, 98	6-124A73	10k
R99	6-124A55	1.8k
R100	6-124A65	4.7k
R101	6-124A73	10k
R102, 103, 104, 105		NOT USED
R106	6-124A93	68k
R107 thru 115		NOT USED
R116	6-10621C87	9.09k ±1%; 1/8 W
R117	6-10621E49	422k ±1%; 1/8 W
R118	6-10621C87	9.09k ±1%; 1/8 W
R119	6-10621E49	422k ±1%; 1/8 W
R120	6-124A77	15k
R121	6-124A45	680
R122, 123	6-124A73	10k
R124		FACTORY SELECTED
	6-13755B82	750 ±1%
	6-13755B83	768 ±1%
	6-13755B84	787 ±1%
	6-13755B85	806 ±1%
	6-13755B86	825 ±1%
	6-13755B87	845 ±1%
	6-13755B88	866 ±1%
	6-13755B89	887 ±1%
	6-13755B90	909 ±1%
	6-13755B91	931 ±1%
	6-13755B92	953 ±1%
	6-13755B93	976 ±1%
	6-13755B94	1k ±1%
R125	6-10621A97	100 ±1%; 1/8 W
R126	6-124A97	100k
R127	6-124A27	120
R128	6-124A97	100k
R129	6-10621C53	4.02k ±1%; 1/8 W
R130, 131		NOT USED
R132	6-124A89	47k
R133	6-10621C87	9.09k ±1%; 1/8 W
R134, 135	6-10621B94	1k ±1%; 1/8 W
R136 thru 139		NOT USED
R140	6-124A89	47k
R141		NOT USED
R142	6-124A55	1.8k
R143	6-124A73	10k
R144	6-124A89	47k
R145, 146		NOT USED
R147	6-124A73	10k
R148	6-124A89	47k
R149	6-125C45	680 ±10%; 1/2 W
R150		NOT USED
R151	6-124A71	8.2k

REFERENCE SYMBOL	MOTOROLA PART NO.	DESCRIPTION
R152	6-124A61	3.3k
R153	6-124A49	1k
R154	6-124A83	27k
R155	6-124A89	47k
R156 thru 159		NOT USED
R160	6-124B08	270k
R161	6-124A51	1.2k
R162 thru 169		NOT USED
R170	6-124A73	10k
R171	6-125C45	680 ±10%; 1/2 W
R172	6-124B16	560k
R173	6-124B02	150k
R174	6-124A27	120
R175	6-124A89	47k
R176	6-124A69	6.8k
R177	6-124A73	10k
R178	6-124B08	270k
R179	6-124A97	100k
R180	6-124A01	10
R181	6-124A65	4.7k
R182	6-124A69	6.8k
R183	6-124B16	560k
R184 thru 200		NOT USED
R201	6-124A73	10k
R202	6-124A27	120
		SWITCH, slide:
S1, 2	40-83204B01	3pdt
		TRANSFORMER, line driver:
T1	25-84202A02	pri: leads 2 and 3; dc res. 50 ohms (identified with polarity dot) sec: no. 1; leads 4 and 6 with lead 5 center tap; dc res. 50 ohms sec: no. 2; leads 7 and 8; dc res. 160 ohms
		INTEGRATED CIRCUIT: (SEE NOTE I)
U1, 2	51-84320A80	type LM324
U3	51-84320A85	type NE556
U4	51-82822F12	type CD4016AE
U5	51-82764K02	QUAD NOR GATE
		THICK FILM MODULE: (SEE NOTE II)
Z1	1-80702T43	assembly
Z2	1-80789B93	assembly
Z3	1-80789B94	assembly
Z4	1-80791B59	assembly
		NON-REFERENCED ITEMS
	1-80794B74	PANEL ASSEMBLY: includes:
	45-84114K01	LEVER, pivot: 2 used
	64-84113K09	PANEL, SWITCH S1 & S2
	3-2950	SCREW, machine: 4-40 x 1/4"; 2 used
	42-10217A02	STRAP, cable harness

NOTE I: For optimum performance, diodes, transistors, and integrated circuits must be ordered by Motorola part numbers.

NOTE II: Field repair of these modules is not recommended, order entire assembly as a replacement.

PARTS LIST

TRN6092A Spark Gap & Guide Rail Kit
(P/O TLN1718B)

PL-5046-O

REFERENCE SYMBOL	MOTOROLA PART NO.	DESCRIPTION
E1, 2	80-83029H01	SPARK GAP: 230 V dc ±15%
		NON-REFERENCED ITEMS
	1-80781B74	SPARK GAP ASSEMBLY includes:
	45-83914G01	SPARK GAPS E1 & E2 GUIDE, card: 2 used

REVISIONS

68P81033E03-K

CHASSIS AND SUFFIX NO.	REF. SYMBOL	CHANGE	LOCATION
TRN6091B	R133	FROM 6-124A73 10K TO 6-10621C87 9.09K	
	R134, 135	FROM 6-10621C97 100 TO 6-10621B94 1K	
	Z1	FROM 1-80751B98 TO 1-80702D43	
	R6	FROM 6-10621D58 48.7K TO 6-10621D66, 59.0K	
	R27	FROM 6-124A89 47k TO 6-124A65 4.7k	
		PANEL WAS 64-84113K01	
		PANEL ASSY WAS 1-80783B95	

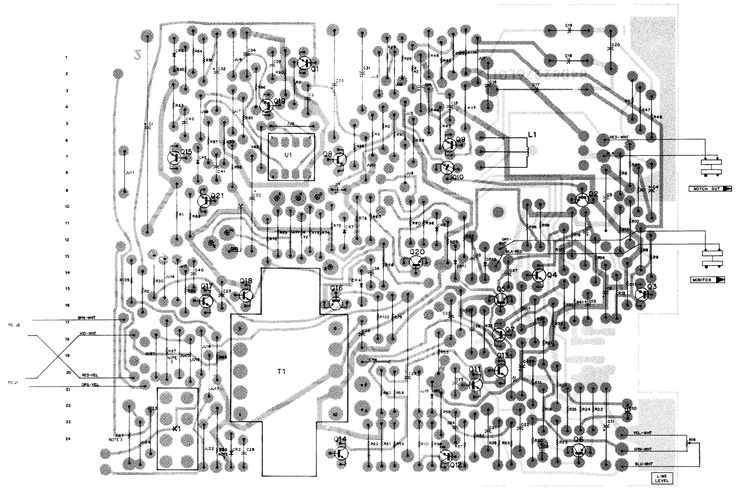

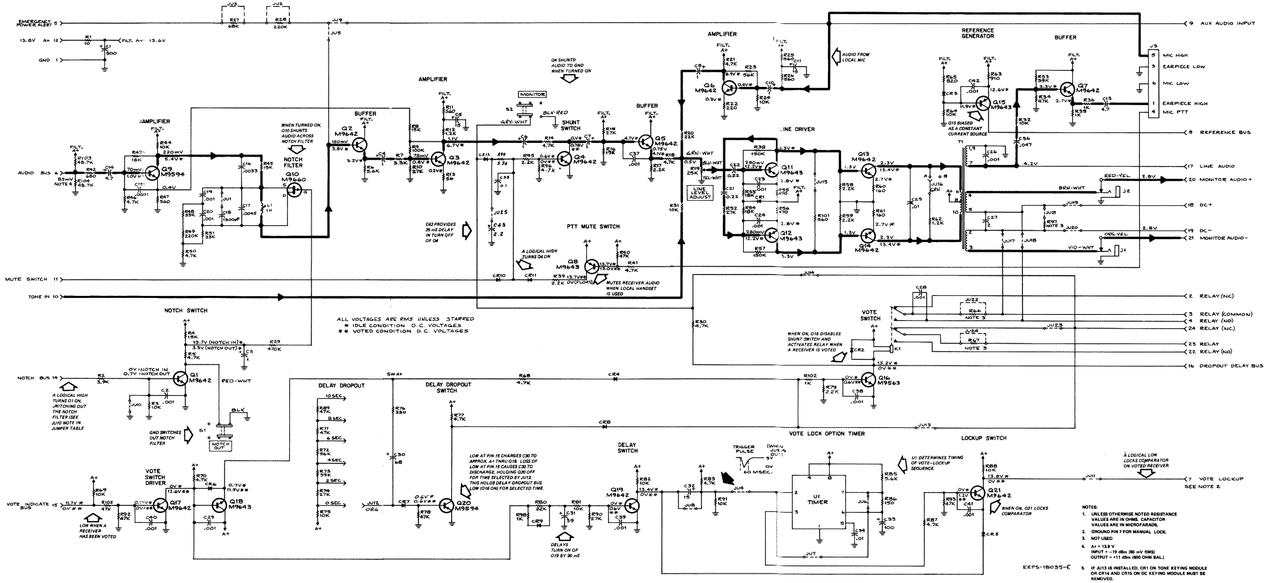

JUMPER TABLES

MISCELLANEOUS FUNCTIONS

A/C1	IN FOR 1950 Hz NOTCH FILTER OUT FOR 2175 Hz NOTCH FILTER (NORMALLY OUT)
A/C8	USED IN SPECIAL APPLICATIONS (NORMALLY OUT)
A/C10	IN FOR CONTINUOUS USE OF NOTCH FILTER (NORMALLY OUT) OUT TO PERMIT SWITCHING OUT THE NOTCH FILTER (NORMALLY OUT)
A/C12	ADJUSTS DURATION OF DROPOUT DELAY. LABELING ON THE BOARD INDICATES THE DELAY IN SECONDS (OR DROPOUT DELAY) (NORMALLY 5 SEC.)
A/C13	IN TO DISABLE AND MUTE COMPARATOR BY APPLYING EXTERNAL GND TO COMPARATOR (NORMALLY OUT) SEE NOTE 5.
A/C14	USED IN SPECIAL APPLICATIONS (NORMALLY OUT) APPLIES GND EXT IN THE DISTRIBUTION SECTION (C4 BANDS)
A/C15	IN TO ATTENUATE AUDIO LEVEL BY 25 dB OUT FOR NORMAL LINE DRIVER OPERATION (NORMALLY OUT)
A/C16	POSITION A FOR NORMAL OPERATION POSITION B FOR LINE BRIDGING (NORMALLY OUT)
A/C17–C20	USED IN SPECIAL KEYING APPLICATIONS ALL JUMPERS NORMALLY IN EXCEPT FOR A/C17, A/C18, AND JUST WHICH ARE NORMALLY OUT
A/C19	IN TO ATTEN TONE DERATION BY −12 dBm (ALL ABBL. NORMALLY OUT)

EMERGENCY POWER ALERT TONE

LEVEL	A/C (NORMALLY OUT)	A/C9 (NORMALLY OUT)	A/C (NORMALLY IN)
SAME AS VOTED AUDIO LINE LEVEL	IN	IN	
10 dB BELOW VOTED AUDIO LINE LEVEL	IN	OUT	
20 dB BELOW VOTED AUDIO LINE LEVEL	OUT	OUT	
CONTINUOUSLY APPLIED TO LINE DRIVER COMPARATOR POWER FAILS			OUT
APPLIED TO LINE DRIVER COMPARATOR POWER FAILS			IN
APPLIED TO LINE DRIVER COMPARATOR POWER FAILS			IN

VOTE LOCK OPTIONS

FUNCTION	A/C (NORMALLY IN)	A/C (NORMALLY IN)	A/C (NORMALLY OUT)	A/C (NORMALLY OUT)	A/C17 (NORMALLY OUT)
LOCK MOMENTARILY APPLIED TO LINE EACH TRANSMISSION	IN	IN	OUT	OUT	IN
LOCK FOR DURATION OF TRANSMISSION	IN	IN	OUT	IN	IN
SAMPLE AND HOLD LOCK-UP	OUT	OUT	IN	OUT	IN
DISABLE LOCK					OUT

LEGEND:

THEORY NOTE

MAINTENANCE NOTE

PRIMARY SIGNAL FLOW

FUNCTION

Amplifies comparator audio signals, controls comparator lockup, and maintains a reference level for the comparators in the signal quality modules. A notch filter notches out the status tone. A dropout delay is also provided which prevents repeater dropout for a preset time adjustable from 0 to 10 seconds.

COMMAND MODULE TROUBLESHOOTING CHART

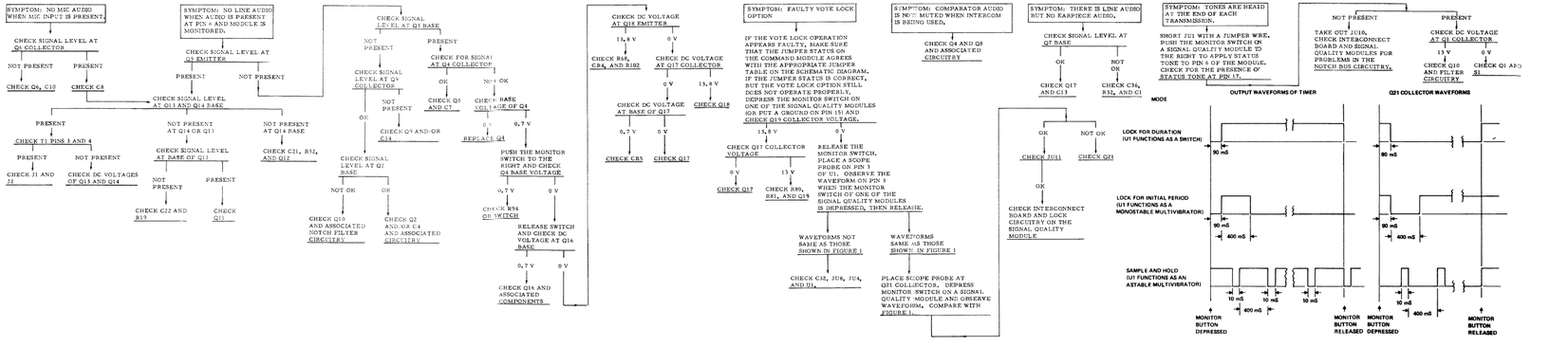

FIGURE 1. VOTE LOCK OPTION WAVEFORMS

PARTS LIST

TRN6093A Command Module PL-3634-C

REFERENCE SYMBOL	MOTOROLA PART NO.	DESCRIPTION
		CAPACITOR, fixed uF
C1	23-83210A19	500 +100-10%; 20 V
C2	8-82284C01	.001 ±10%; 50 V
C3	23-84538G01	1.0 ±20%; 35 V
C4	23-82783B14	1.0 ±10%; 15 V
C5	23-865136	15 ±20%; 25 V
C6, 7	23-82783B14	1.0 ±10%; 5 V
C8	23-84538G01	1.0 ±10%; 35 V
C10	23-84538G01	1.0 ±10%; 35 V
C11	23-865136	15 ±20%; 25 V
C13	23-84538G02	4.7 ±20%; 20 V
C14	23-84762H07	4.7 ±20%; 10 V
C15	8-82284C01	.001 ±10%; 50 V
C16	8-82905G25	.0033 ±10%; 100 V
C17	8-84326A30	.0045 ±1%; 50 V
C18	21-864736	1300 pF ±5%; 500 V
C19, 20	21-847601	.001 ±5%; 100 V
C21, 22	8-83813H11	0.22 ±10%; 75 V
C23, 24	21-82187B29	.001 ±10%; 100 V
C25	8-82905G01	.01 ±10%; 50 V
C26	21-82187B29	.001 ±10%; 100 V
C27	8-82045T05	2.0 ±10%; 350 V
C28, 29	21-82187B29	.001 ±10%; 100 V
C30	23-865594	68 ±10%; 15 V
C31	23-82783B36	39 ±10%; 10 V
C32	23-865136	15 ±20%; 25 V
C33	23-82783B04	100 ±20%; 25 V
C34	8-82905G01	.01 ±10%; 50 V
C35	8-82905G27	0.1 ±10%; 50 V
C36	8-82905G03	.047 ±10%; 50 V
C37 thru 42	21-82187B29	.001 ±10%; 100 V
C43	23-82783B16	2.2 ±10%; 20 V
CR1 thru 12	48-83654H01	DIODE: (SEE NOTE) silicon
J1, 2	9-82684D01	CONNECTOR, receptacle female; single contact consist of 28-84269C01
J3		CONNECTOR, male; 3 req'd. 28-84269C02 CONNECTOR, male; 2 req'd.
K1	80-84201A01	RELAY 2 form "C" coil res. 200 ohm
	24-84200A01	COIL: 1.005 Hz res. 140 ohm
Q1 thru 7	48-869642	TRANSISTOR: (SEE NOTE) NPN type M9642
Q8	48-869643	PNP type M9643
Q9	48-869594	NPN type M9594
Q10	48-869660	field-effect M9660
Q11, 12	48-869643	PNP type M9643
Q13, 14	48-869642	NPN type M9642
Q15	48-869643	PNP type M9643
Q16	48-869563	NPN type M9563
Q17, 18, 19	48-869642	NPN type M9642
Q20	48-869594	NPN type M9594
Q21	48-869642	NPN type M9642
		RESISTOR, fixed: ±5%; 1/4 W; unless otherwise stated
R1	6-125C01	10 ±10%; 1/2 W
R2	6-124A63	3.9k
R3	6-124A73	10k
R4	6-124A77	15k
R5	6-124A65	4.7k
R6	6-124A67	5.6k
R7	6-124A61	3.3k
R8	6-124A77	15k
R9	6-124A97	100k
R10	6-124A83	27k
R11	6-124A43	560
R12	6-124A51	1.2k
R13	6-124A19	56
R14	6-124A65	4.7k
R15	6-124A83	27k
R16	6-124A77	15k
R17	6-124A57	2.2k
R18	6-124A65	4.7k
R19	18-82515B28	var; 25k
R20	6-124A81	22k
R21	6-124A65	4.7k
R22	6-124A33	220
R23	6-124A91	56k
R24	6-124A73	10k
R25, 26	6-124A43	560
R27	6-124A93	68k
R28	6-124B06	220k
R29	6-124B14	470k
R30	6-124A65	4.7k
R31, 32	6-124A73	10k
R33	6-124A87	39k
R34	6-124A89	47k
R35, 36	6-124A49	1k
R38	6-124B02	150k
R39	6-124A57	2.2k
R40	6-124A89	47k
R41	6-124A65	4.7k
R42	6-124A79	18k
R43	6-124A79	18k
R44	6-124A73	10k
R45	6-124A77	15k
R46	6-124A65	4.7k
R47	6-124A43	560
R48	6-124A85	33k
R49	6-124B06	220k
R50	6-124A65	4.7k
R51	6-124A85	33k
R52	6-124A83	27k
R53, 54	6-124A79	18k
R55, 56	6-124A41	470
R57	6-124B02	150k
R58, 59	6-124A57	2.2k
R60, 61	6-124A30	160
R62	6-124A51	1.2k
R63	6-124A48	910
R64	6-124A73	10k
R65	6-124A47	820
R68	6-124A65	4.7k
R69	6-124A73	10k
R70	6-124A65	4.7k
R71	6-124A89	47k
R72	6-124A91	56k
R73	6-124A87	39k
R74	6-124A83	27k
R75	6-124A73	10k
R76	6-124A31	330
R77	6-124A65	4.7k
R78	6-124A89	47k
R79	6-124A57	2.2k
R80	6-124A81	22k
R81, 82	6-124A73	10k
R83	6-124A65	4.7k
R85	6-124A67	5.6k
R86	6-124A29	150
R87	6-124A65	4.7k
R88	6-124A73	10k
R89	6-124A89	47k
R90	6-124A83	27k
R91	6-124A73	10k
R92, 93	6-124A89	47k
R94	6-124A61	3.3k
R95	6-124A57	2.2k
R96	6-124A65	4.7k
R98	6-124A49	1k
R99		
R101	6-124A43	560
R102	6-124A49	1k
R103, 104	6-1062LD58	48.7k ±1%; 1/8 W
R105	6-124A89	47k
S1, 2	40-83204B01	SWITCH: slide
T1	25-83000H01	TRANSFORMER pri #1: pins 2 and 3 res. 25 ohm pri #2: pins 4 and 5 res. 25 ohm sec #1: pins 6 and 10 res. 50 ohm sec #2: pins 9 and 7 res 190 ohm
V1	80-84201A01	INTEGRATED CIRCUIT: (SEE NOTE) type NE555V
		NON-REFERENCED ITEMS
	43-84920H01	SPACER, relay
	43-865080	BUSHING; 2 req'd.
	39-10184A10	CONTACT, chain form; 8 req'd.

NOTE: For optimum performance, diodes, transistors, and integrated circuits must be ordered by Motorola part numbers.

REVISIONS 68P81026E59-E

CHASSIS AND SUFFIX NO.	REF. SYMBOL	CHANGE	LOCATION
TRN6093A	R43	FROM 6-124A93, 68k TO 6-124A75, 18k	
	R46	FROM 6-124A73, 10k TO 6-124A65, 4.7k	
	R47	FROM 6-124A57, 100 TO 6-124A43, 560	
	R60, 61	FROM 6-124A31, 180 TO 6-124A30, 160	
	R80	FROM 6-124A87, 39k TO 6-124A81, 22k	
	R103, 104	FROM 6-124A65, 4.7k TO 6-1062LD58, 48.7k	
	CR5	DELETED 48-83654H01 AND REPLACED WITH R105 6-124A89, 47k	
TRN6093A-1	C19, 20	FROM 21-82187B29, .001 uF; 10% TO 21-847601, .001 uF; ±5%	
	C43	ADDED 23-82783B16, 2.2 uF	
	CR12	ADDED 48-83654H01	
	R96	FROM 6-124A89, 47k TO 6-124A65, 4.7k	
	R94	FROM 6-124A57, 2.2k TO 6-124A61, 3.3k	
TRN6093A-2	R79	FROM 6-124A89, 47k TO 6-124A57, 2.2k	

MODEL	SUFFIX	DESCRIPTION
TRN6095A		TONE KEYING MODULE
KLN6210A		"VIBRASENDER" RESONANT REED

TONE KEYING MODULE

MODEL TRN6095A

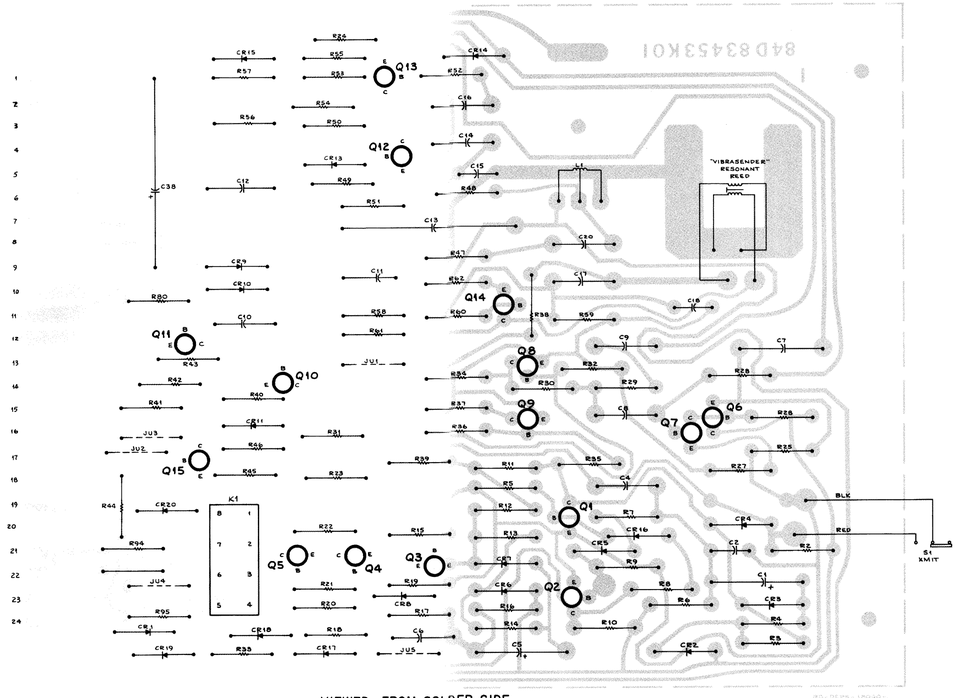

VIEWED FROM SOLDER SIDE

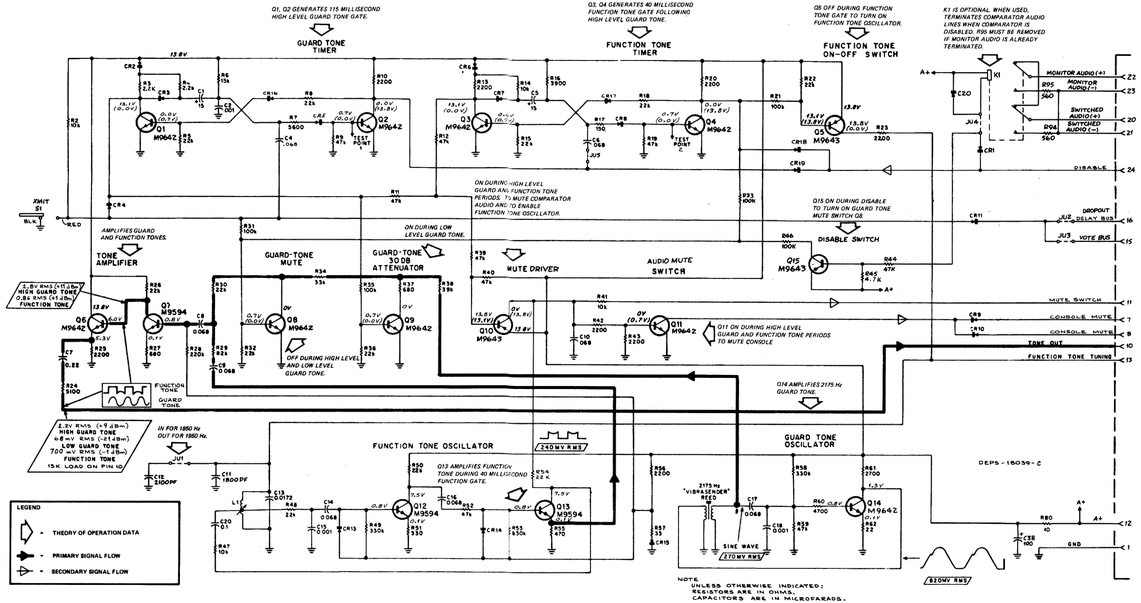

FUNCTION

Provides tones to key a tone controlled transmitter to "Spectra TAC" systems where voted audio is to be retransmitted. (Adjustment, test, and troubleshooting data is given on back of this sheet.)

TONE KEYING MODULE

PARTS LIST

TRN6095A Tone Keying Module — PL-3576-A

REFERENCE SYMBOL	MOTOROLA PART NO.	DESCRIPTION
		CAPACITOR, fixed: uF ±10%; 50 V; unless otherwise stated
C1, 5	23-82783B24	15; 25 V
C2, 15, 18	21-859601	.001 ±20%; 600 V
C4, 6, 8, 9, 10, 14, 16, 17	8-82905G04	.068
C7	8-82905G12	0.22
C11	21-82537B48	1800 pF; 100 V
C12	21-863294	2100 pF ±1%; 500 V
C13	8-84326A32	.0172 ±1%
C20	8-82905G07	0.1
C38	23-82077C01	100 -100-10%; 35 V
		DIODE: (SEE NOTE)
CR1 thru 11, 13 thru 20	48-83654H01	silicon
		COIL, RF:
L1	24-84200A02	includes tuning core; does not include 42-84315A01 CLIP
		TRANSISTOR: (SEE NOTE)
Q1 thru 4, 6, 8, 9, 11, 14	48-869642	NPN; type M9642
Q5, 10, 15	48-869643	PNP; type M9643
Q7, 12, 13	48-869594	NPN; type M9594
		RESISTOR, fixed: ±5%; 1/4 W; unless otherwise stated
R2, 14, 41, 47	6-124C73	10k ±10%
R3, 4, 10, 13, 20, 23, 25, 42, 43, 56	6-124A57	2.2k
R5, 8, 15, 18, 22, 26, 30, 32, 36, 48, 50, 54	6-124C81	22k ±10%
R6	6-124A77	15k
R7	6-124A67	5.6k
R9, 11, 12, 19, 39, 40, 44, 52, 59	6-124C89	47k ±10%
R16	6-124A63	3.9k
R17	6-124A29	150
R21, 31, 33, 35, 46	6-124C97	100k ±10%
R24	6-124A66	5.1k
R27, 37	6-124A45	680
R28	6-124B06	220k
R29	6-124A95	82k
R34	6-124A85	33k
R38	6-124A87	39k
R45	6-124A65	4.7k
R49, 53, 58	6-124B10	330k
R51	6-124C37	330 ±10%
R55	6-124A41	470
R57	6-124A13	33
R60	6-124A65	4.7k
R61	6-124A59	2.7k
R62	6-124A09	22
R63	6-124C01	10 ±10%
R67, 68	6-124C43	560 ±10%
		SWITCH, slide:
S1	40-83468E01	spst; momentary
NON-REFERENCED ITEMS		
	9-84910C01	SOCKET, "Vibrasender" reed
	9-83011H01	TERMINAL, female (staked to board) 15 req'd.
	39-10184A10	TERMINAL, male (staked to board) 2 req'd.

NOTE: Replacement diodes and transistors must be ordered by Motorola part number for optimum performance.

REFERENCE SYMBOL	MOTOROLA PART NO.	DESCRIPTION
TLN4151A Relay Kit (Optional)		PL-3611-O
K1	80-84201A01	RELAY, armature: 6.8 V; 2-form "C"; coil res. 200 ohms
NON-REFERENCED ITEM		
	43-84920H01	SPACER

"VIBRASENDER" Resonant Reed — PL-5296-O

	KLN6210A	"VIBRASENDER" Resonant Reed

REVISIONS — 68P81026E61-C

CHASSIS AND SUFFIX NO.	REF. SYMBOL	CHANGE	LOCATION
TRN6095A-1	R45	FROM 6-124C89 47k ±10%; 1/4 W TO 6-124A65 4.7k ±5%; 1/4 W	O15 BASE

OSCILLATOR ADJUSTMENT

A frequency counter must be used to check frequencies with sufficient accuracy. If the 1850 or 1950 Hz tone is off more than ± 5 Hz, readjust L1 to retune the oscillator to the exact frequency.

DYNAMIC TEST

Step 1. Connect oscilloscope to tone output at pin 10.

Step 2. Momentarily actuate the XMIT switch. Waveform shown in Figure 1 should be present.

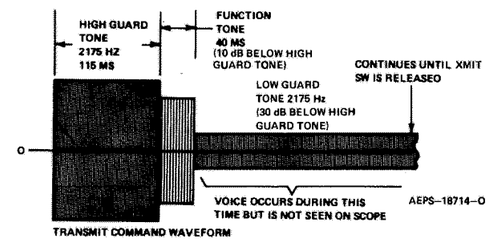

Figure 1. Dynamic Test Waveform

TROUBLESHOOTING

Use a dc voltmeter to measure voltages. They should be as indicated on the schematic diagram. Quiescent state voltages are shown with no parentheses while actuated state voltages are shown in parentheses. If voltages are abnormal, the fault is in the corresponding stage. Actual values are not critical and may vary considerably. Most important is that a change of state occurs.

Step 1. Measure quiescent dc voltages for all stages (Q1 to Q14).

Step 2. Check active state changes for Q1, Q2, Q8, Q9, Q10, and Q11 after jumpering test point 1 to ground (pin 1).

Step 3. Check active state changes for Q3, Q4 and Q5 after moving jumper from test point 1 to test point 2 (to ground).

Step 4. Jumper test point 1 to ground and use oscilloscope and/or ac voltmeter to check high guard tone waveforms and ac levels shown on the schematic diagram.

Step 5. Remove jumper from test point 1 and jump test point 2 to ground. Use oscilloscope and/or ac voltmeter to check function tone waveforms and ac levels shown on the schematic diagram.

Step 6. Remove jumper from test point 2.

DC KEYING MODULE

MODEL TRN6097A

PARTS LIST

TRN6097A DC Keying Module — PL-3581-O

REFERENCE SYMBOL	MOTOROLA PART NO.	DESCRIPTION
		CAPACITOR, fixed:
C1	23-82601A25	100 uF ±20%; 20 V
C2,7	23-83214C02	15 uF ±20%; 25 V
C3	23-82077C08	5 uF ±10%; 300 V
C4	8-83813H40	0.22 uF ±10%; 400 V
C5	21-82428B21	.01 uF +30-10%; 100 V
C6	21-82372C06	0.2 uF +80-20%; 25 V
C8	8-82905G04	.068 uF ±10%; 50 V
C9	8-82905Q11	0.22 uF ±10%; 50 V
		DIODE: (SEE NOTE)
CR8 thru 18	48-83654H01	silicon
CR3 thru 7	48-82466H18	silicon; BLK-ORG
		RESISTOR, fixed: ±10%; 1/4 W unless otherwise stated
R1,2,3,13,16, 17,18	6-124C57	2.2k
R4	6-124C53	1.5k
R5	6-124C41	470; 1 W
R6	6-127C93	±8%; 2 W
R7,8,12	6-124C41	470
R9	18-83108C07	variable; 5k
R10,11,14,20	6-124C73	10k
R15	6-124C79	18k
R19	6-124C89	47k
R21,22	6-124C43	560
		SWITCH, slide:
S1	40-83468E01	spst; momentary
		TRANSFORMER, converter:
T1	25-83233G01	pri: pins 4 and 6 with pin 5 center tap; dc res. 0.107 ohms each side; feedback: GRN, YEL with BLK center tap; dc res. .038 ohms each side; sec: pins 1 and 3 with pin 2 center tap; dc res. 58.7 ohms total
		TRANSISTOR: (SEE NOTE)
Q1,5	48-869643	M9643
Q2,3	48-869428	M9428
Q4	48-869540	M9540
Q6,7	48-869642	M9642
		VOLTAGE REGULATOR:
VR1,2	48-82256C15	Zener type; 5.1 V
NON-REFERENCED ITEM		
	9-83011H01	TERMINAL, female (staked to board) 24 req'd.

NOTE: Replacement diodes and transistors must be ordered by Motorola part number for optimum performance.

TLN4151A Relay Kit (Optional) — PL-3611-O

K1	80-84201A01	RELAY, armature: 6.8 V; 2-form "C"; coil res. 200 ohms
NON-REFERENCED ITEM		
	43-84920H01	SPACER

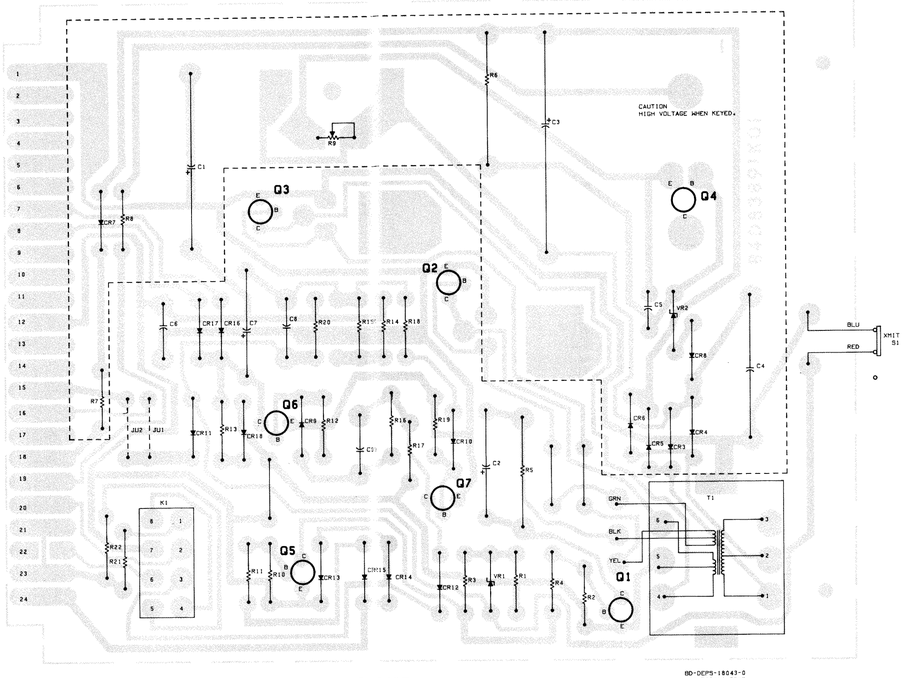

SHOWN FROM SOLDER SIDE

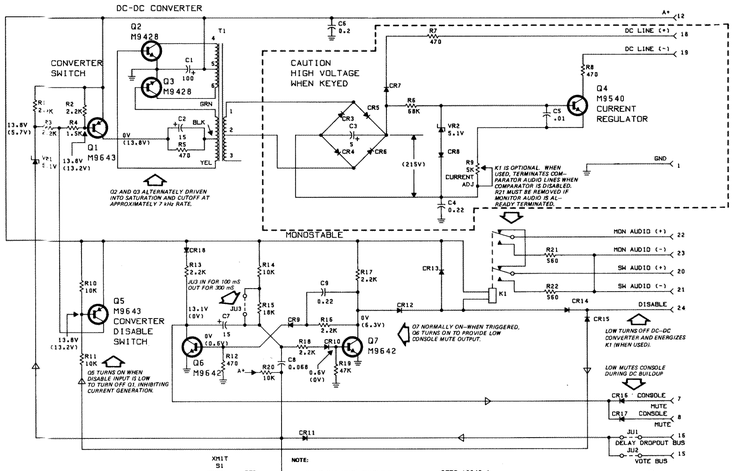

FUNCTION

Provides DC current to key a DC controlled transmitter in "Spectra TAC" systems where voted audio is to be retransmitted.

DC KEYING MODULE/POWER SUPPLY & EMERGENCY POWER KIT

68P81026E62-B
2/10/78-NPC

POWER SUPPLY

MODEL TPN1153A

& EMERGENCY POWER KIT

MODEL TPN1141A

FUNCTION

TPN1153A provides dc operating voltages for "Spectra TAC" comparators. TPN1141A provides emergency battery operation in case of ac power failure.

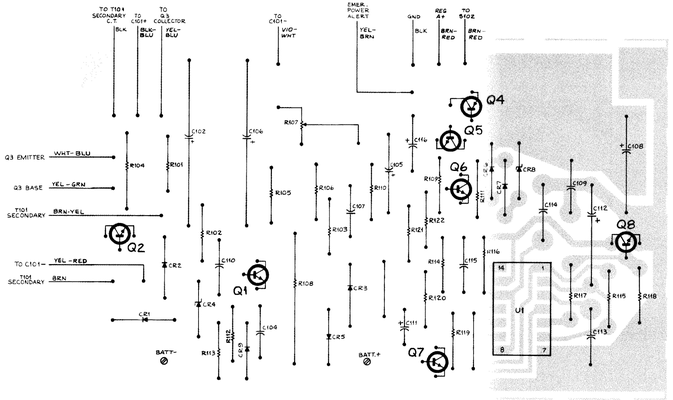

SHOWN FROM SOLDER SIDE

CEPS-24257-O

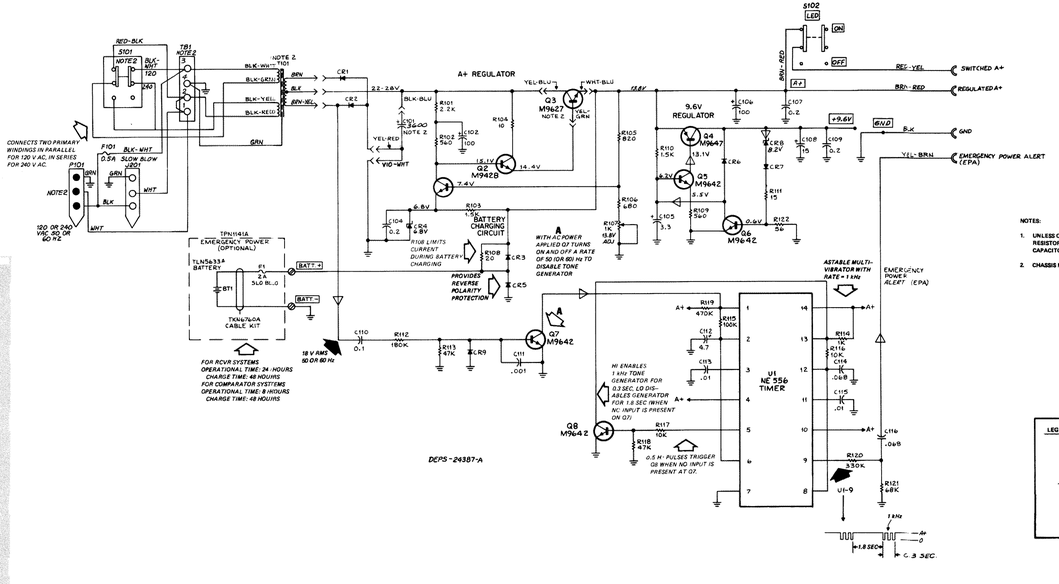

NOTES:

1. UNLESS OTHERWISE NOTED: RESISTOR VALUES ARE IN OHMS, CAPACITOR VALUES ARE IN MICROFARADS.
2. CHASSIS MOUNTED COMPONENT.

LEGEND

- THEORY OF OPERATION DATA
- SIGNAL FLOW
- MAINTENANCE DATA

PARTS LIST

TRN6297A Power Supply Board — PL-3469-B

REFERENCE SYMBOL	MOTOROLA PART NO.	DESCRIPTION
		CAPACITOR, fixed: (uF) unless otherwise stated
C102, 106	23-82077C01	100 +150-10%; 35 V
C104, 107, 109	21-82372C05	0.2 +80-20%; 25 V
C105	23-83214C17	3.3 ±20%; 15 V
C108	23-83214C02	15 ±20%; 25 V
C110	8-82905G22	0.1 ±10%; 100 V
C111	21-82187B29	.001 ±10%; 100 V
C112	23-83214C15	4.7 ±20%; 25 V
C113, 115	8-82905G01	.01 ±10%; 50 V
C114, 116	8-82905G04	.068 ±10%; 50 V
		DIODE:(SEE NOTE)
CR1, 2, 3	48-82525G14	silicon
CR4	48-82256C02	Zener; type: 6.8 V
CR5	48-82466H13	silicon
CR6, 7, 9	48-83654H01	silicon
CR8	48-82256C16	Zener; type: 8.2 V
		TRANSISTOR: (SEE NOTE)
Q1, 5 thru 8	48-869642	NPN; type M9642
Q2	48-869428	NPN; type M9428
Q4	48-869647	PNP; type M9647
		RESISTOR, fixed: ±10%; 1/4 W unless otherwise stated
R101	6-124C57	2.2k
R102, 109	6-124C43	560
R103, 110	6-124C53	1.5k
R104	6-125C01	10; 1/2 W
R105	6-124C47	820
R106	6-124C45	680
R107	18-83168C03	var; 1k
R108	17-82177B07	20 ±5%; 5 W
R111	6-124A05	15 ±5%
R112	6-124D04	180k
R113, 118	6-124C89	47k
R114	6-124C49	1k
R115	6-124C97	100k
R116, 117	6-124C73	10k
R119	6-124D14	470k
R120	6-124D10	330k
R121	6-124C93	68k
R122	6-124A19	56 ±5%
		INTEGRATED CIRCUIT: (SEE NOTE)
U101	51-84320A85	timer; type NE556
NON-REFERENCED ITEM		
	29-83362C01	TERMINAL; 2 req'd.

NOTE:
For optimum performance, diodes, transistors, and integrated circuits must be ordered by Motorola part numbers.

TKN6760A Battery Cable — PL-3472-B

REFERENCE SYMBOL	MOTOROLA PART NO.	DESCRIPTION
F1	65-804908	FUSE: 2 amp; 32 V; slow-blow type
NON-REFERENCED ITEMS		
	41-82885A01	SPRING, fuse
	14-82882A01	INSULATOR, fuseholder
	14-82883A01	INSULATOR, fuseholder cap
	29-84078B01	LUG, spade; 2 req'd.
	42-82884A01	CLIP, fuse; 2 req'd.
	39-10061A32	CONTACT, male (small)
	39-10061A23	CONTACT, male (large)

TLN5633A Battery — PL-3473-A

REFERENCE SYMBOL	MOTOROLA PART NO.	DESCRIPTION
BT1	60-843465F02	BATTERY (gelsel)
NON-REFERENCED ITEM		
	54-84463F01	LABEL, battery

TPN6098A Chassis & Hardware Kit — PL-6076-O

REFERENCE SYMBOL	MOTOROLA PART NO.	DESCRIPTION
C101	23-83093G23	CAPACITOR, fixed: 3600 uF +150-10%; 35 V
		FUSE, cartridge: 0.5A; 125 V; slow blow type
J201		CONNECTOR, receptacle: includes:
	9-831751L01	INSULATOR, connector
	29-84151L01	TERMINAL, wire: female; 3 used
P101		CONNECTOR, plug: includes:
	28-83176L01	INSULATOR, connector
	29-84150L01	TERMINAL, wire: male; 3 used
Q3	48-869627	TRANSISTOR: (SEE NOTE) NPN: type M9627
S101	40-84241C03	SWITCH, slide: dpdt
S102	40-83204B01	dpdt
T101	25-83043L01	TRANSFORMER: pri. #1 BLK-WHT, BLK-GRN: res. 28 ohms pri. #2 BLK-YEL, BLK-RED: res. 31 ohms sec. BRN, BRN-YEL w/BLK center tap: res. 1.0 ohms total
TB1	31-121702	BOARD, terminal: 4 lug terminals
NON-REFERENCED ITEMS		
	1-80781B63	HEATSINK ASSEMBLY includes:
	26-84112K01	HEATSINK
	9-82673A01	SOCKET, transistor (Q3)
	29-847854	LUG, slotted-tongue; 5 used
	30-84110A01	CABLE, 3-conductor; 20" used
	9-82083C03	RECEPTACLE, fuse (F101)
	5-10277A18	GROMMET, plastic
	11-1002Z455	COMPOUND, thermal joint (Q3)
	14-865854	INSULATOR, transistor (Q3)
	29-812979	LUG, solderless; 4 used
	37-12706	GROMMET, rubber
	42-10217A02	STRAP, tie; nylon; 7 used
	42-10219A48	RETAINER, "E" ring
	2-119913	NUT hex; 8-32 x 11/32"; 4 used
	3-122922	SCREW, machine; 6-32 x 5/8"; 2 used
	3-134168	SCREW, tapping; 4-40 x 1/4"; w/lockwasher; 4 used
	3-136934	SCREW, tapping; 6-32 x 3/8"; w/lockwasher; 2 used
	3-83343L01	SCREW, captive

NOTE:
For optimum performance, diodes, transistors, and integrated circuits must be ordered by Motorola part numbers.

68P81039E36-O
7/6/78-NPC

TONE PRIORITY MODULE

MODEL TRN6100A

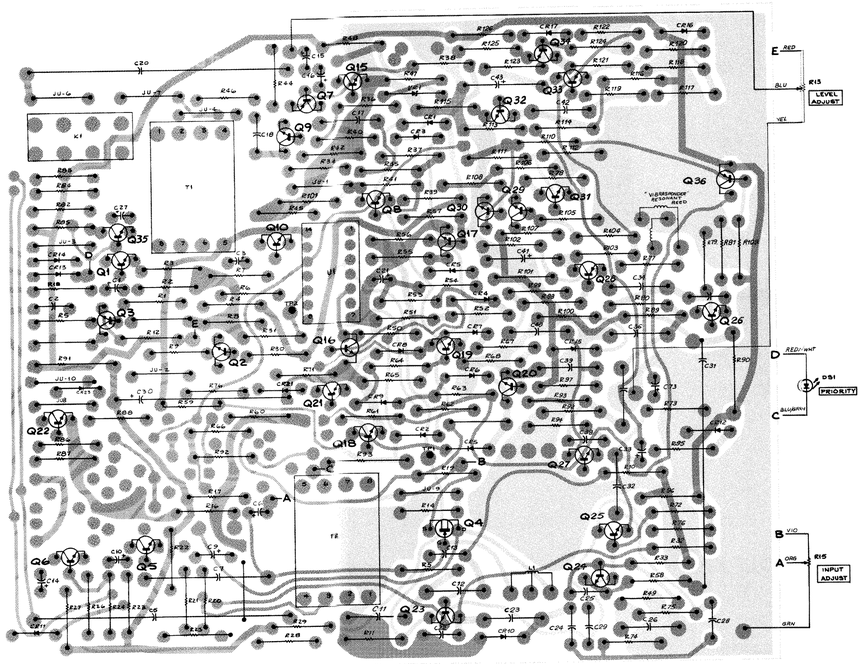

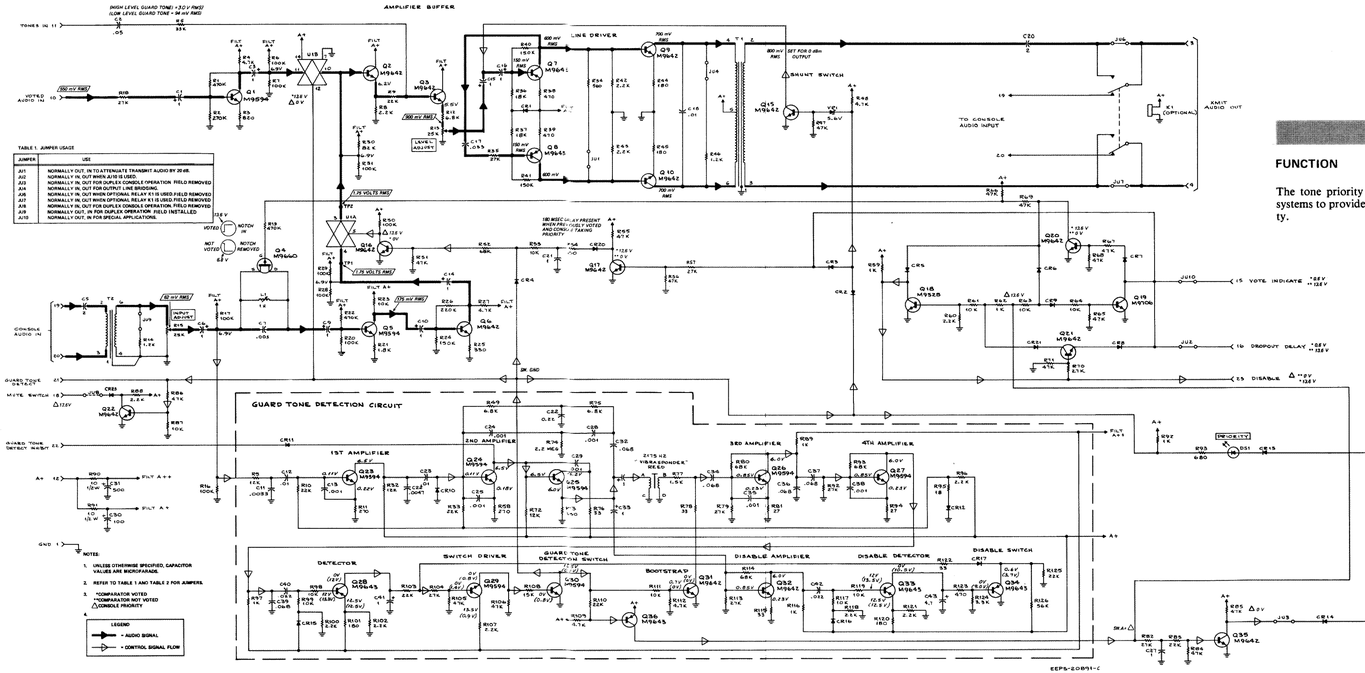

FUNCTION

The tone priority module is used in "Spectra TAC" systems to provide the dispatcher console system priority.

PARTS LIST SHOWN ON BACK OF THIS DIAGRAM

68P81031E41-E
5/30/80-NPC

TONE PRIORITY MODULE

PARTS LIST

TRN6100A Tone Priority Module — PL-4365-A

REFERENCE SYMBOL	MOTOROLA PART NO.	DESCRIPTION
		CAPACITOR, fixed: uF ±10%; 50 V; unless otherwise stated
C1	23-84538G01	1.0 ±20%; 35 V
C2	21-82372C04	.05 +80-20%; 25 V
C3	23-84538G01	1.0 ±20%; 35 V
C5	8-863305	2.0; 200 V
C6	23-84538G01	1.0 ±20%; 35 V
C7	8-84326A29	.005 ±2%
C8		NOT USED
C9, 10	23-84538G01	1.0 ±20%; 35 V
C11	8-82905G25	.0033 ±10%; 100 V
C12	8-82905G01	.01
C13	21-82187B16	.001; 100 V
C14, 15, 16	23-84538G01	1.0 ±20%; 35 V
C17	8-82905G16	.033; 100 V
C18	21-82428B21	.01 +30-10%; 100 V
C20	8-863305	2.0; 200 V
C21	23-84538G01	1.0 ±20%; 35 V
C22	21-82428B27	.0047; 100 V
C23	8-82905G01	.01
C24	21-82537B16	.001 ±5%; 100 V
C25	21-82187B29	.001; 100 V
C26	8-82905G11	0.22
C27	23-84538G01	1.0 ±20%; 35 V
C28	21-82537B16	.001 ±5%; 100 V
C29	21-82187B29	.001; 100 V
C30	23-82601A25	100 +150-10%; 20 V
C31	23-83210A19	500 +100-10%
C32	8-82905G04	.068
C33	23-84538G01	0.1 ±20%; 35 V
C34	8-82905G04	.068
C35	21-82187B29	.001; 100 V
C36, 37	21-82905G04	.068
C38	21-82187B29	.001; 100 V
C39	8-82905G04	.068
C40	8-82905G02	.022
C41	23-82783B08	0.1 ±20%; 35 V
C42	8-82905G02	.022
C43	23-84538G01	0.1 ±20%; 35 V
C44	23-84538G01	0.1 ±20%; 35 V
		DIODE: (SEE NOTE)
CR1 thru 17	48-83654H01	silicon
		LIGHT EMITTING DIODE:
DS1	48-88245C10	green lens
		RELAY:
K1	80-84201A01	2 form "C" res. 200 ohms (optional)
		COIL:
L1	1V80702B11	INDUCTOR AND GROUND STRAP ASSEMBLY; includes:
	24-84200A01	1.005 H inductance
	42-84315A01	STRAP, ground
		TRANSISTOR: (SEE NOTE)
Q1	48-869594	NPN; M9594
Q2, 3	48-869642	NPN; M9642
Q4	48-869660	field effect; M9660
Q5	48-869594	NPN; M9594
Q6	48-869642	NPN; M9642
Q7, 8	48-869643	PNP; M9643
Q9, 10, 15, 16, 17	48-869642	NPN; M9642
Q18	48-869528	NPN; M9528
Q19	48-869706	NPN; M9706
Q20, 21	48-869642	NPN; M9642
Q22	48-869642	NPN; M9642
Q23 thru 27	48-869594	NPN; M9594
Q28	48-869643	PNP; M9643
Q29, 30	48-869594	NPN; M9594
Q31, 32	48-869642	NPN; M9642
Q33, 34	48-869643	PNP; M9643
Q35, 36	48-869642	NPN; M9642
		RESISTOR, fixed: ±5%; 1/4 W; unless otherwise stated
R1	6-124B14	470k
R2	6-124B08	270k
R3	6-124A47	820
R4	6-124A65	4.7k
R5	6-124A85	33k
R6, 7	6-124A97	100k
R8	6-124A57	2.2k
R9	6-124A81	22k
R10	6-124A81	22k
R11	6-124A35	270
R12	6-124A69	6.8k
R13	18-867272	variable; 25k
R14	6-124A51	1.2k
R15	18-867272	variable; 25k
R16, 17	6-124A97	100k
R18	6-124A83	27k
R19	6-124B14	470k
R20	6-124A97	100k
R21	6-124A55	1.8k
R22	6-124B14	470k
R23	6-124A73	10k
R24	6-124B02	150k
R25	6-124A37	330
R26	6-124B06	220k
R27	6-124A65	4.7k
R28, 29	6-124A97	100k
R30	6-124A95	82k
R31	6-124A97	
R32	6-124A75	12k
R33	6-124A35	22k
R34	6-124A43	560
R35	6-124A83	27k
R36, 37	6-124A79	18k
R38, 39	6-124A41	470
R40, 41	6-124B02	150k
R42, 43	6-124A57	2.2k
R44, 45	6-124A31	180
R46	6-124A51	1.2k
R47	6-124A89	47k
R48	6-124A65	4.7k
R49	6-124A69	6.8k
R50	6-124A97	100k
R51	6-124A89	47k
R52	6-124A93	68k
R53	6-124A73	10k
R54	6-124A25	100
R55, 56	6-124A89	47k
R57	6-124A83	27k
R58	6-124A35	270
R59	6-124A49	1k
R60	6-124A57	2.2k
R61	6-124A73	10k
R62	6-124A49	1k
R63, 64	6-124A73	10k
R65, 66, 67, 68	6-124A89	47k
R70	6-124A83	27k
R71	6-124A89	47k
R72	6-124A75	12k
R73	6-124A37	330
R74	6-124B30	2.2 meg
R75	6-124A69	6.8k
R76	6-124A13	33
R77	6-124A53	1.5k
R78	6-124A13	33
R79	6-124A83	27k
R80	6-124A93	68k
R81	6-124A11	27
R82	6-124A83	27k
R83	6-124A81	22k
R84, 85, 86	6-124A89	47k
R87	6-124A73	10k
R88	60124A57	2.2k
R89	6-124A49	1k
R90, 91	6-125A01	10; 1/2 W
R92	6-124A49	1k
R93	6-125A45	680; 1/2 W
R94	6-124A11	27
R95	6-124A07	18
R96	6-124A57	2.2k
R97	6-124A49	1k
R98	6-124A73	10k
R99	6-124A73	10k
R100	6-124A57	2.2k
R101	6-124A31	180
R102	6-124A57	2.2k
R103	6-124A81	22k
R104	6-124A83	27k
R105, 106	6-124A89	47k
R107	6-124A57	2.2k
R108	6-124A77	15k
R109	6-124A65	4.7k
R110	6-124A81	22k
R111	6-124A73	10k
R112	6-124A65	47k
R113	6-124A83	27k
R114	6-124A93	68k
R115	6-124A13	33
R116	6-124A49	1k
R117	6-124A73	10k
R118	6-124A57	2.2k
R119	6-124A73	10k
R120	6-124A31	180
R121	6-124A57	2.2k
R122	6-124A13	33
R123	6-124A41	470
R124	6-124A61	3.3k
R125	6-124A81	22k
R126	6-124A91	56k
R127	6-124A75	12k
R128	6-124A83	27k
R129	6-124A93	68k
		TRANSFORMER:
T1, 2	25-84202A02	pri: pins 2 and 3; res. 50 ohms sec: #1 pins 4 and 6; res. 50 ohms sec: #2 pins 7 and 8; res. 160 ohms
		INTEGRATED CIRCUIT: (SEE NOTE)
U1	51-82822F12	type CD4016AC
		VOLTAGE, regulator:
VR1	48-82256C12	Zener; 5.6 V
		MECHANICAL PARTS
	9-84910C01	SOCKET, female; 4 contact
	9-83011H01	RECEPTACLE, single contact; 17 req'd.
	43-865080	BUSHING; 2 req'd.
	01-80789B96	PANEL, riveted; tone priority

NOTE:
For optimum performance, diodes, transistors, and integrated circuits must be ordered by Motorola part numbers.

SECONDARY LINE DRIVER/ SECONDARY ENCODER MODULE

MODEL TRN6101A

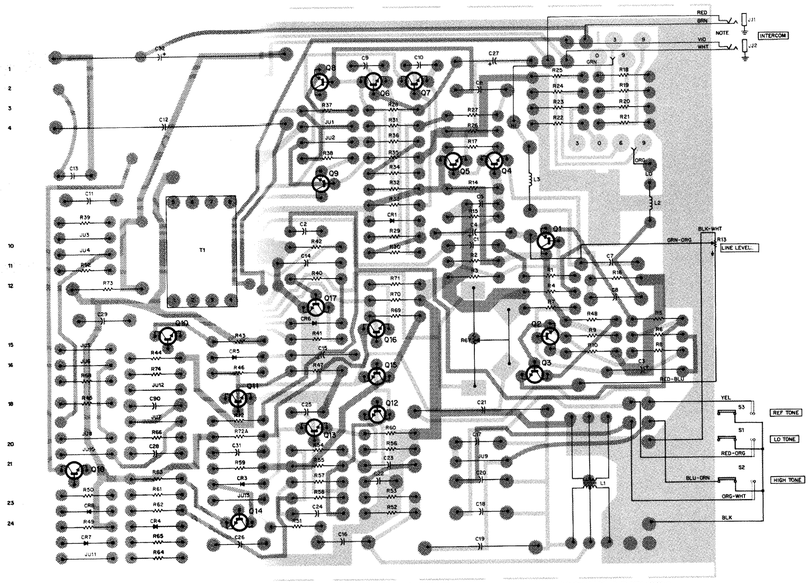

SHOWN FROM SOLDER SIDE

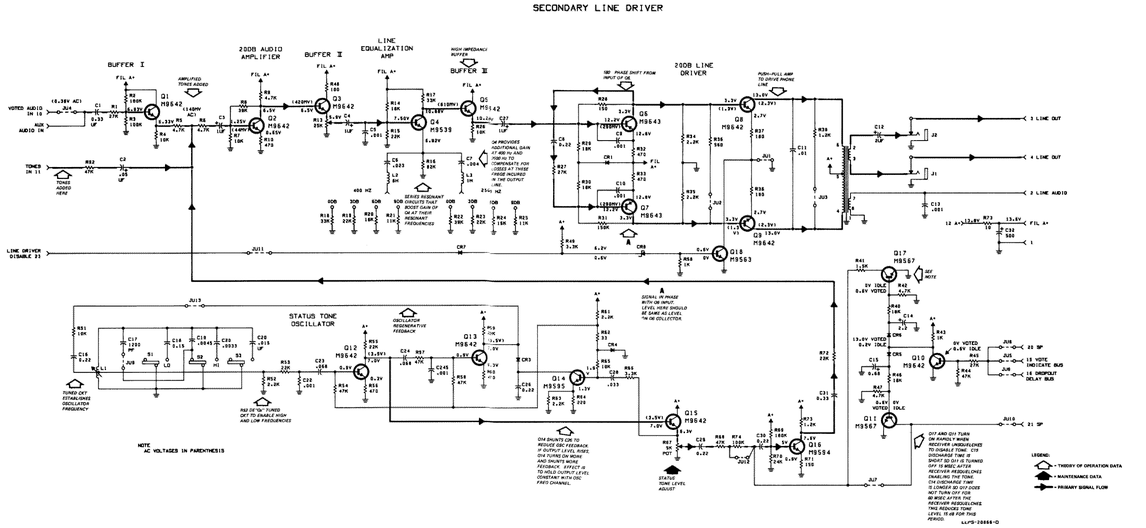

Table 1. TRN6101A Secondary Line Driver Jumper Usage

JUMPER	USAGE
JU1	Normally in, out for line driver disable switch
JU2	Normally out, in for 20 dB attenuation
JU3	Normally in, out for line bridging
JU4	Normally in, out for special applications
†JU5	Normally out, in for secondary encoder vote indicate use (field installed)
†JU6	Normally out, in for secondary encoder delay vote indicate use
JU7	Normally in, out for special applications
JU8	Normally out, in for special applications
JU9	Normally out, in for 1950 Hz status tone
JU10	Normally out, in for special applications
JU11	Normally out, in for line driver disable
JU12	Normally out, in for 0 dB systems
†JU13	Normally out, in for use as a secondary encoder (field installed)
†JU21*	Normally in, when secondary line driver installed in slot 7
†JU22*	Normally in, when secondary line driver installed in slot 8
†JU23*	Normally out, when secondary line driver is used

* Located on TRN6099A Comparator Interconnect Board.
† Used in secondary encoder operation.

FUNCTION

The secondary line driver is used in "Spectra TAC" systems where a second 600 ohm line driver is needed. The module also has the capability of generating status tone for sub-comparator applications.

68P81031E42-C
5/30/80-NPC

PARTS LIST

TRN6101A Secondary Line Driver — PL-4179-A

REFERENCE SYMBOL	MOTOROLA PART NO.	DESCRIPTION
		CAPACITOR, fixed; uF unless otherwise stated
C1	8-83813H29	0.33 ±10%; 50 V
C2	21-82372C04	.05 +80-20%; 100 V
C3, 4	23-83214C04	1 ±20%; 15 V
C5	21-82187B29	.001 ±10%; 100 V
C6	8-82905G39	.023 ±5%; 50 V
C7	21-863396	.004 ±1%; 500 V
C8	8-82905G11	0.22 ±10%; 50 V
C9, 10	21-82187B29	.001 ±10%; 100 V
C11	8-82905G14	.01 ±10%; 100 V
C12	8-863305	2 ±10%; 350 V
C13	21-82187B29	.001 ±10%; 100 V
C14	23-82783B16	2.2 ±10%; 15 V
C15	23-82783B48	0.68 ±5%; 15 V
C16	8-82905G11	0.22 ±10%; 50 V
C17	21-874352	.0012 ±5%; 500 V
C18	8-82905G05	0.15 ±10%; 50 V
C19	8-84326A30	.0045 ±1%; 50 V
C20	8-82905G25	.0033 ±10%; 100 V
C21	8-84326A21	.023 ±5%
C22	21-82187B29	.001 ±10%; 100 V
C23, 24	9-82905G04	.068 ±10%; 50 V
C25	21-82187B29	.001 ±10%; 100 V
C26	8-82905G11	0.22 ±10%; 50 V
C28	8-82905G16	.033 ±5%; 100 V
C29, 30	8-82905G11	0.22 ±10%; 50 V
C31	8-83813H29	0.33 ±10%; 50 V
C32	23-83210A19	500 +100-10%; 20 V
		DIODE: (SEE NOTE)
CR1	48-83654H01	silicon
CR3	48-855216	germanium
CR4 thru 7	48-83654H01	silicon
CR8	48-82256C12	zener; 5.6 V
		CONNECTOR, receptacle:
J1, 2	9-82684D01	female
		COIL, RF:
L1	1-80702B11	includes:
	24-84200A01	adjustable, 1 H
	42-84315A01	CLIP, ground
L2	24-84003A01	choke; 6 H
L3	25-82113H02	choke; 1 H
		TRANSISTOR: (SEE NOTE)
Q1, 2, 3	48-869642	NPN; M9642
Q4	48-869539	NPN; M9539
Q5	48-869642	NPN; M9642
Q6, 7	48-869643	PNP; M9643
Q8, 9, 10	48-869642	NPN; M9642
Q11	48-869567	NPN; M9567
Q12, 13	48-869642	NPN; M9642
Q14	48-869594	NPN; M9594
Q15	48-869642	NPN; M9642
Q16	48-869594	NPN; M9594
Q17	48-869567	NPN; M9567
Q18	48-869563	NPN; M9563
		RESISTOR, fixed ±5%; 1/4 W: unless otherwise stated
R1	6-124A83	27k
R2	6-124A97	100k
R3	6-124A97	100k
R4	6-124A73	10k
R5, 6	6-124A65	4.7k
R7	6-124A73	10k
R8	6-124A87	39k
R9	6-124A65	4.7k
R10	6-124A41	470
R13	18-867272	variable; 25k
R14	6-124A79	18k
R15	6-124A81	22k
R16	6-124A95	82k
R17, 18	6-124A85	33k
R19	6-124A81	22k
R20	6-124A78	16k
R21	6-124A74	11k
R22	6-124A87	39k
R23	6-124A81	22k
R24	6-124A78	16k
R25	6-124A74	11k

REFERENCE SYMBOL	MOTOROLA PART NO.	DESCRIPTION
R26	6-124A73	10k
R27	6-124A83	27k
R28	6-124B02	150k
R29, 30	6-124A79	18k
R31	6-124B02	150k
R32, 33	6-124A41	470
R34, 35	6-124A57	2.2k
R36	6-124A43	560
R37, 38	6-124A31	180
R39	6-124A51	1.2k
R40	6-124A79	18k
R41	6-124A53	1.5k
R42	6-124A65	4.7k
R43	6-124A49	1k
R44	6-124A89	47k
R45	6-124A83	27k
R46	6-124A79	18k
R47	6-124A65	4.7k
R48	6-124C25	100k
R49	6-124A61	3.3k
R50	6-124A49	1k
R51	6-124A73	10k
R52	6-124A57	2.2k
T53	6-124A81	22k
R54	6-124A89	47k
R55	6-124A81	22k
R56	6-124A41	470
R57, 58	6-124A89	47k
R59	6-124A81	22k
R60	6-124A41	470
R61	6-124A57	2.2k
R62	6-124A13	33
R63	6-124A57	2.2k
R64	6-124A33	220
R65	6-124A73	10k
R66	6-124A61	3.3k
R67	18-83168C07	variable; 5k
R68	6-124A89	47k
R69	6-124B04	180k
R70	6-124A82	24k
R71	6-124A29	150
R72	6-124A81	22k
R72A	6-124A51	1.2k
R73	6-125C01	10
R74	6-124A97	100k
R92	6-124A89	47k
		SWITCH:
S1, 2, 3	40-83468E01	slide; momentary
		TRANSFORMER:
T1	25-84202A02	pri: pins 2 and 3; res 50 ohms sec: pins 4 to 6; res 50 ohms; pin 7 to 8; res 160 ohms
	MECHANICAL PARTS	
	43-865080	BUSHING; 4 req'd.
	3-2950	SCREW, machine; 4-40x1/4"; 2 req'd.
	39-10184A10	TERMINAL, female; 8 req'd.
	9-83011H01	CONTACT, female; 24 req'd.
	64-84113K08	PANEL
	45-84111K01	TABS, pulling; 2 req'd.

NOTE:

For optimum performance, diodes, transistors, and integrated circuits must be ordered by Motorola part numbers.

CONSOLE INTERFACE KIT

MODEL TRN6102A

Table 1. TRN6102A Console Interface Kit Wiring Chart

FUNCTION	FROM (SIG. QUAL. MODULE SLOT-PIN)	TO	WIRE COLOR
FAILED INDICATE	1-23	TB2-10	RED
	2-23	TB2-9	ORG
	3-23	TB2-8	YEL
	4-23	TB2-7	GRN
	5-23	TB2-6	BLU
	6-23	TB2-5	VIO
	7-23	TB2-4	GRY
	8-23	TB2-3	BRN
UNSQUELCH INDICATE	1-11	TB1-10	RED-WHT
	2-11	TB1-9	ORG-WHT
	3-11	TB1-8	YEL-WHT
	4-11	TB1-7	GRN-WHT
	5-11	TB1-6	BLU-WHT
	6-11	TB1-5	VIO-WHT
	7-11	TB1-4	GRY-WHT
	8-11	TB1-3	BRN-WHT
VOTE INDICATE BUS	8-15	TB2-2	WHT
FAILED BUS	8-24	TB2-1	BLK

EPS-20904-O

REFERENCE SYMBOL	MOTOROLA PART NO.	DESCRIPTION

PARTS LIST

TRN6102A Console Interface Kit PL-4339-O

TB1, 2	31-848187	TERMINAL BOARD: 10 terminal; incl 3-1976 SCREW, machine: 6-32 x 5/16", 10 req'd.
NON-REFERENCED ITEMS		
	7-82103L01 3-134169	BRACKET, mounting: 2 req'd. SCREW, machine: 4 req'd.

[redacted]

FUNCTION

Provides interface with a console for remotely displaying comparator indicator status. The console must be equipped with a comparator display module.

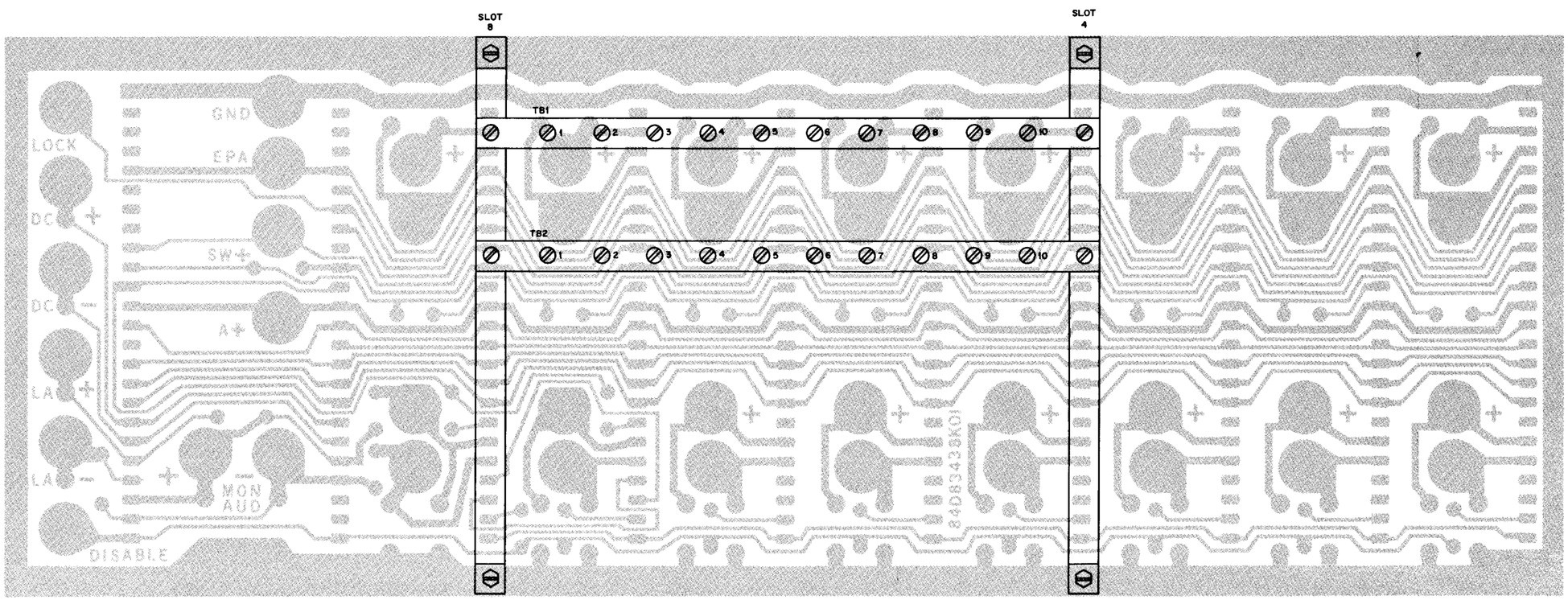

TRN6102A MOUNTING LOCATION DETAIL

BD-DEPS-20225-A
OL-DEPS-20903-O

CONSOLE INTERFACE KIT

68P81031E43-B
2/10/78-NPC

END OF DOCUMENT