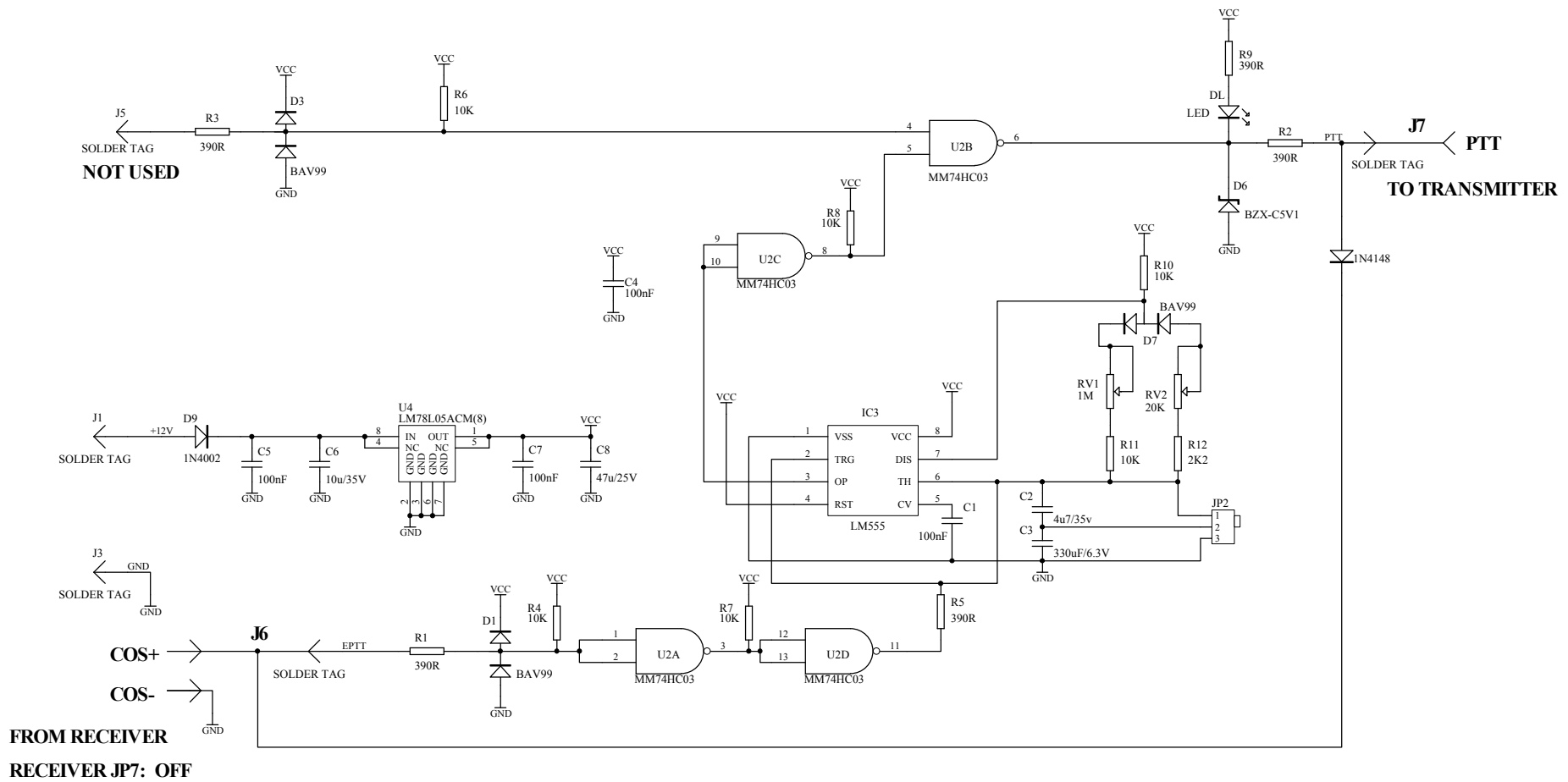


| Rev No. | ECO No. | Description of Change |
|---|---|---|
| 2 | 116 | C3 reversed, footprints for D1, D3, D7 fixed, fonts changed to 12pt - PCB files updated |

Title **HEART BEAT TIMER**

| | | | |
|---|---|---|---|
| Size: A3 | Number: 05/9152 | Revision: 2 | **RF Technology Pty Ltd** Unit 10, 8 Leighton Place Hornsby, NSW 2077 Australia |
| Print Date: 15-Aug-2002 12:44:30 | Sheet 1 of 1 | | |
| Rev. Release Date: 01/05/2000 | Originator: David Lecomte | | |

File: D:\Protel Files\Copies from Crocodile&Wambat\HBTIMER - CIRCUITS.DDB - Documents\MODIFIED HBTIMER - schemv2.SCH

30/9152/0001