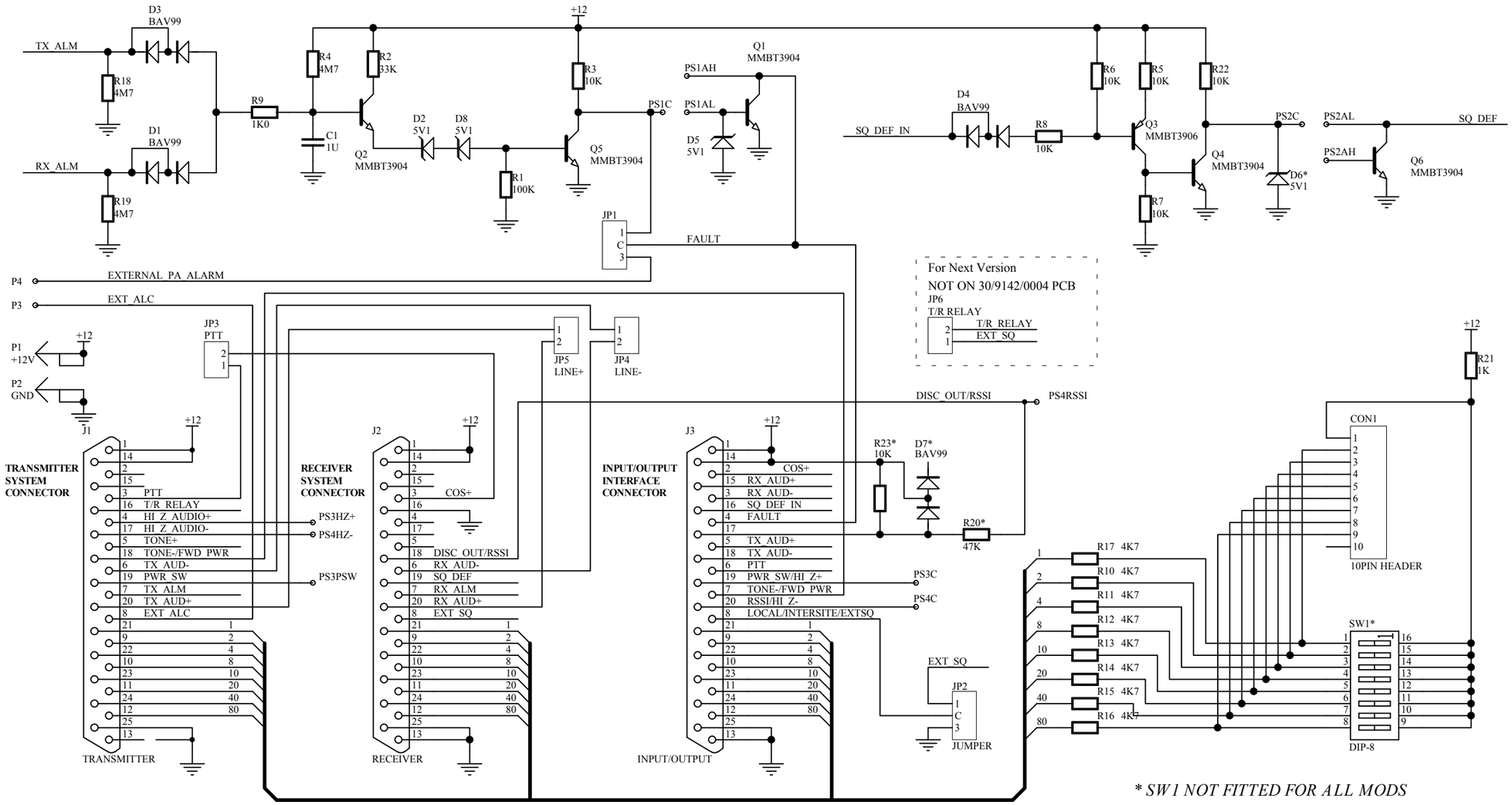

** SW1 NOT FITTED FOR ALL MODS*

STD ALARM MODS:
D6, D7, R23, R20, JP1: NOT FITTED
PS1, PS2 DEPENDING ON REQUIREMENT
RX; DB25 PIN 7 CUT O/T, CONNECT TO R151
DB25 PIN 19 CUT O/T, CONNECT TO R113
REMOVE JP7, JP8, JP9.
TX: DB25 PIN 7 CUT O/T, CONNECT TO R86
REMOVE JP9, JP10, JP11

EXTRA MODS
FIT: D6, D7, R23
PS3C: CONNECTED TO PSW
PS4C: CONNECTED TO RSSI
JP2C: CONNECTED TO 1 (EXT_SQ)
RX; DB25 PIN 18 CUT O/T, CONNECT TO DB9 PIN7 (RSSI)
TX: DB25 PIN 18 CUT O/T, CONNECT TO DB9 PIN8 (FWD PWR)
DB25 PIN 19 CUT O/T, CONNECT TO C19 AS SHOWN

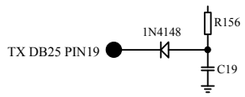

TRUNKING MODS
FIT: R20
PS1C: CONNECTED TO AH
PS2C: CONNECTED TO AL
PS3C: CONNECTED TO HZ+
PS4C: CONNECTED TO HZ-
JP1C: CONNECTED TO 1 OR 3
DEPENDING ON REQUIREMENT
JP2C: CONNECTED TO 3 OR LEFT OPEN
DEPENDING ON REQUIREMENT

REPEATER MODS
JP4: ON
JP5: ON
JP3: DEPENDING ON APPLICATION

Rev No.	ECO No.	Description of Change
4	0163	"ALARM ON" when no TX or RX plugged in; (Add R18, R19and D8; change R4 tp 4M7, C1 to 1u)
3	0161	Add jumpers for different application

Title **ALARM/TRUNKING INTERFACE**

Size: A3	Number: 11/9142 R7	Revision: 4
Print Date: 16-Dec-2002 13:24:41	Sheet 1 of 1	
Rev. Release Date: 22/07/2002	Originator: **G. LOU**	
File: D:\Protel Files\Work Files\9142_4.ddb - Documents\9142_4.sch		

RF Technology Pty Ltd.
Unit 10, 8 Leighton Place
Hornsby, NSW 2077
Australia