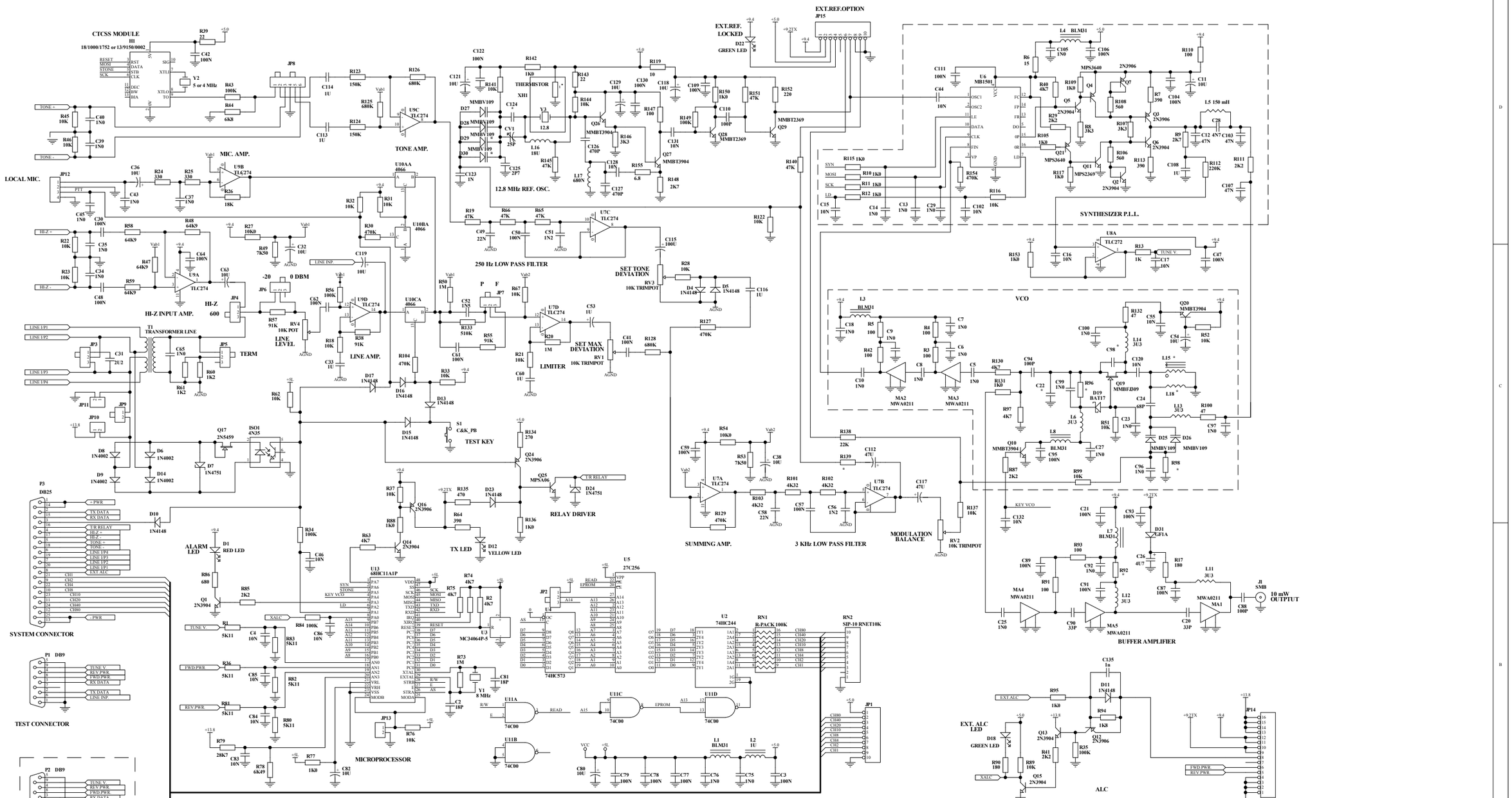

* COMPONENT VALUE TABLE

FREQUENCY RANGE	C22	C98	C124			D29	D30			L15	L18			R92	R96	R98	R139	
66 - 88 MHz	4P7	15P	75P			NO	NO			2T	NO			270	270	33	1K0	
136 - 154 MHz	15P	4P7	47P			YES	NO			1T	NO			180	100	22	4K7	
148 - 174 MHz	15P	4P7	47P			YES	NO			1T	NO			180	100	22	4K7	

Title	RF Technolgy Pty Ltd 10/8 Leighton Place, Hornsby, Australia, 2077
Size A1	Number 05/9116/ R7 T70, T150 Exciter
	Revision 2
Date:	18-Nov-2002
Sheet of	1
File:	D:\Protel Files\Work Files\VHF\MANU.ddb
Drawn By	JBS