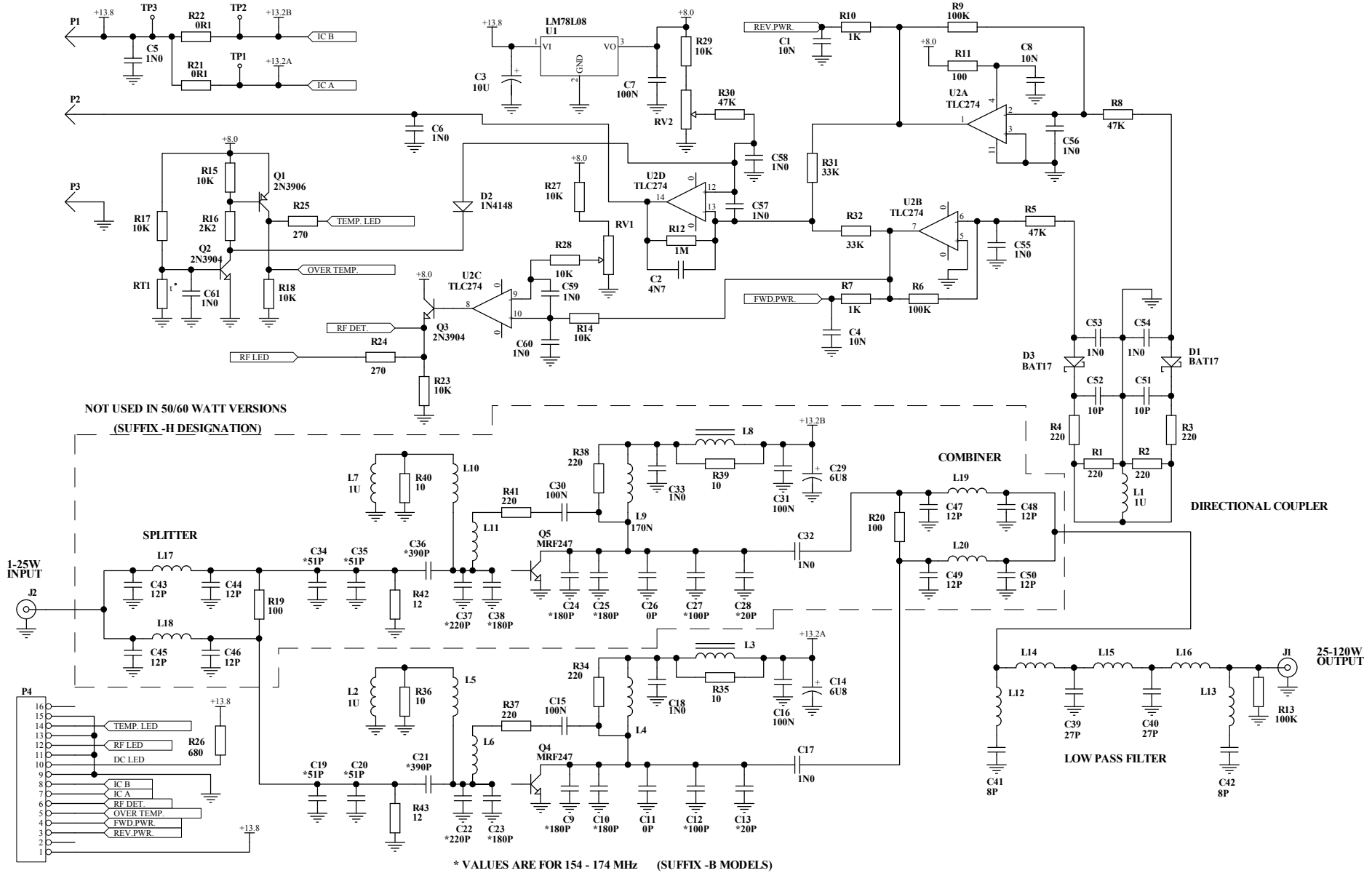

* VALUES ARE FOR 154 - 174 MHz (SUFFIX -B MODELS)

	C19 C34	C20 C35	C21 C36	C22 C37	C23 C38	C9 C24	C10 C25	C12 C27	C13 C28	C39 C40	C41	C42
136-154MHz (SUFFIX -A MODELS)	68P	68P	510P	330P	270P	160P	160P	120P	27P	39P	10P	12P

C11/C26 MAY BE FITTED ON SOME MODELS

Title	RF TECHNOLOGY PTY. LTD. UNIT 17, 8 LEIGHTON PLACE, HORNSBY, 2077, AUSTRALIA	
Size A3	Number 9118 VHF PA (MODELS PA150A, -B, -AH, -BH)	Revision Rev 5
Date: 26-Nov-2002	Sheet 1 of 3	
File: D:\Protel Files\Work Files\VHFMANU.ddb	Drawn By: JBS	