REALISTIC®

Service Manual

19-1120

HTX-202

2-Meter Amateur VHF·FM Transceiver

Catalog Number: 19-1120

Contents

Specifications 2
Disassembly Instructions 4
Block Diagram 7
Theory of Operation 11
Alignment Instructions 17
Troubleshooting Hints 22
Error Display 23
Wiring Diagram 24
Printed Circuit Board Views (Top and Bottom) 25
Exploded View 36
Exploded View Parts List 37
Electrical Parts List 40
Semiconductor Voltage Chart 55
Semiconductor Lead Identification 59
IC Internal Connection 63
Schematic Diagrams 69

© 1992 Tandy Corporation.
All Rights Reserved.
Realistic is a registered trademark used by Tandy Corporation.

Transmitter ..... PLL synthesizer, Frequency Modulation
Receiver ..... PLL synthesizer, superheterodyne system
Communication Frequency Range ..... 144~148MHz (5KHz step)
Operating Voltage ..... 6~14V DC (negative ground)
Temperature and Humidity range ..... 14°F~140°F (−10°C~+60°C) and 10%~90%
Transmitter/Receiver switching ..... Electrical

Standard Test Conditions

Battery supply voltage ..... 7.2V DC
Modulation 3KHz
Receiver output impedance ..... 8 ohms, non-inductive
ANT. load impedance of transmitter ..... 50 ohms, non-inductive
Ambient conditions:
  Temperature ..... 63°F~91°F (17°C~33°C)
  Humidity ..... 40%~70%

Receiver

Description	Nominal	Limit
Intermediate Frequency		
1st IF	21.4MHz	
2nd IF	455 KHz	
Sensitivity:		
12 dB SINAD	0.2μV	0.25μV
20 dB NQ.	0.35μV	0.4μV
Squelch Sensitivity:		
Threshold	0.1μV	0.2μV
Tight	2μV	4~1μV
Spurious Response Attenuation	80dB	60dB
Intermodulation Attenuation	70dB	60dB
Adjacent Channel Rejection (25KHz)	70dB	60dB
Modulation Acceptance Bandwidth	8KHz	7.5KHz
Hum and Noise	50dB	40dB
Audio Output Power (10% THD):		
7.2V DC	0.3W	0.25W
9V DC	0.5W	0.4W
12V DC	1W	0.7W
Audio Distortion	2%	10%
Audio Response	−6dB/oct	+1/−3dB, −6dB/oct
Current Drain:		
Stand-by without Power Save	35mA	45mA
Stand-by Power Save	[illegible]	[illegible]

ansmitter

scription	Nominal	L
Power output:		
.2V DC	2.2W	
V DC	3.5W	
2V DC	6W	
3.8V DC	7.5W	
ximum deviation	4.5KHz	5
n and Noise	42dB	4
dio distortion	0.5%	
dio response	+6dB/oct	+1/−3dB, +6dB
rious and Harmonics emission	70dB	6
quency error	±0.0005%	±0.00
. Sensitivity	4mVrms	10mV
CSS Tone deviation	0.7KHz	0.5~1
MF Tone deviation	3.5KHz	3~4
rent drain:		
.2V DC	0.8A	
V DC	0.95A	1
2V DC	1.4A	1.
3.8V DC	1.55A	1
ower Power	0.46A	0
bility variation against antenna impedance	Satisfactory when dummy antenna is varied from 40 ohms to 200 ohms.	

ner Items

ieral power requirement ..... 6~14V

ensions without battery ..... (W)2 9/16''(65mm)×(H)4 5/8''(117mm)×(D)1 7/16'' (37r

ght ..... 1 lbs 3 ozs (54

e: Nominal specs represent the design specs. All units should be able to approximate these-s
exceed and some may drop slightly below these specs. Limit specs represent the absolute w
dition that still might be considered acceptable; in no case should a unit fail to meet limit sp

DISASSEMBLY INSTRUCTIONS

1. To remove the belt clip, remove two screws(A).

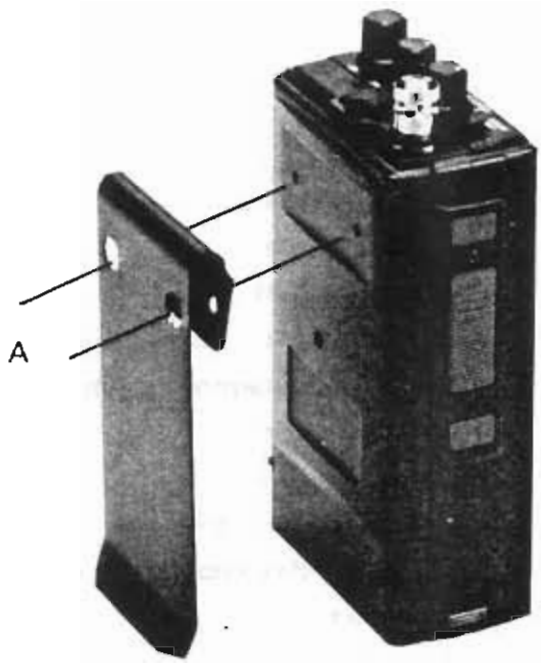

2. To remove the battery ground plate:
   A: Remove the battery pack.
   B: Remove four screws (A) from the battery ground plate.
   This also release the latch mechanism.
   Note the position of the latch plate in the latch button.
   Then, remove the latch mechanism and button.

3. To access the RF board, remove five screws(A) from the back cover, and lift off the back cover. Then, pull the RF section out from the top, and lift it out of the case. Take care not to pull the ribbon trace from either assembly when you remove the RF section.

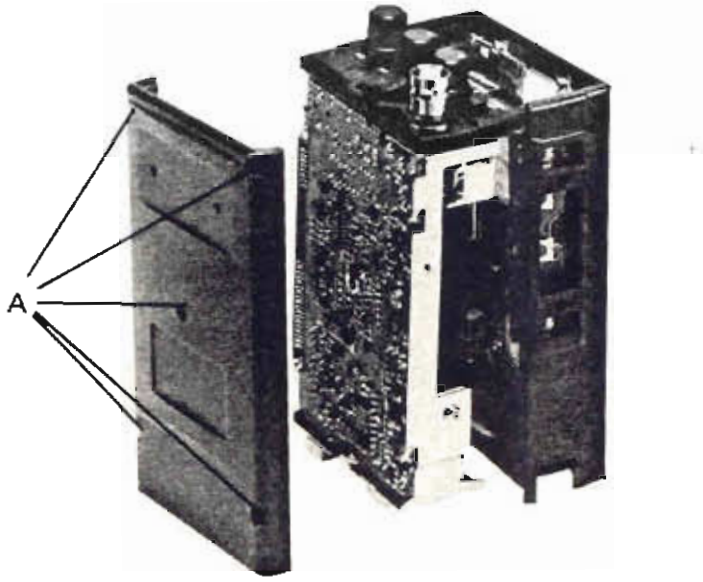

4. To access the Digital board:
   A. Remove two screws (A) from the PTT button.
   B. Then, remove five screws (B) from the shield plate.
   C. Desolder the lithium battery from the shield plate.
   D. Solder the lithium battery to ground on the RF board for testing.

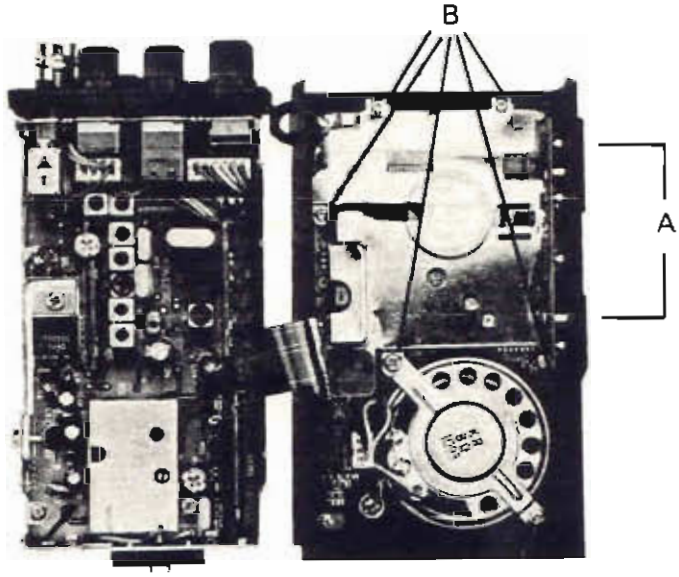

5. To reassemble, reverse the above steps.

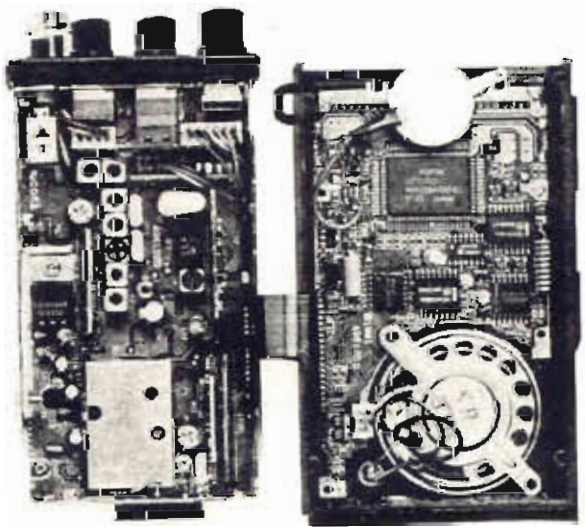

BLOCK DIAGRAM

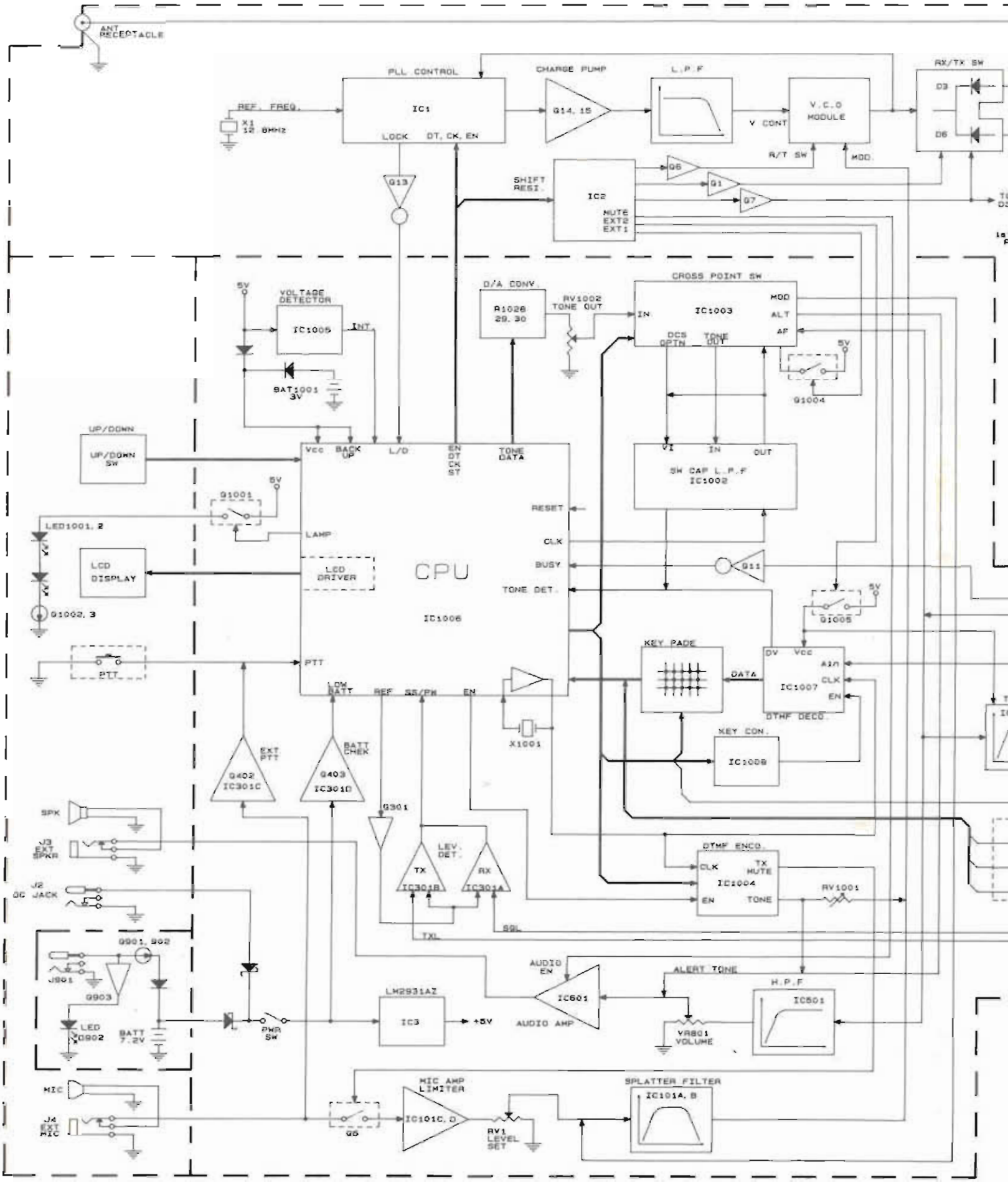

BLOCK DIAGRAM

Cat. No.: 19-1120

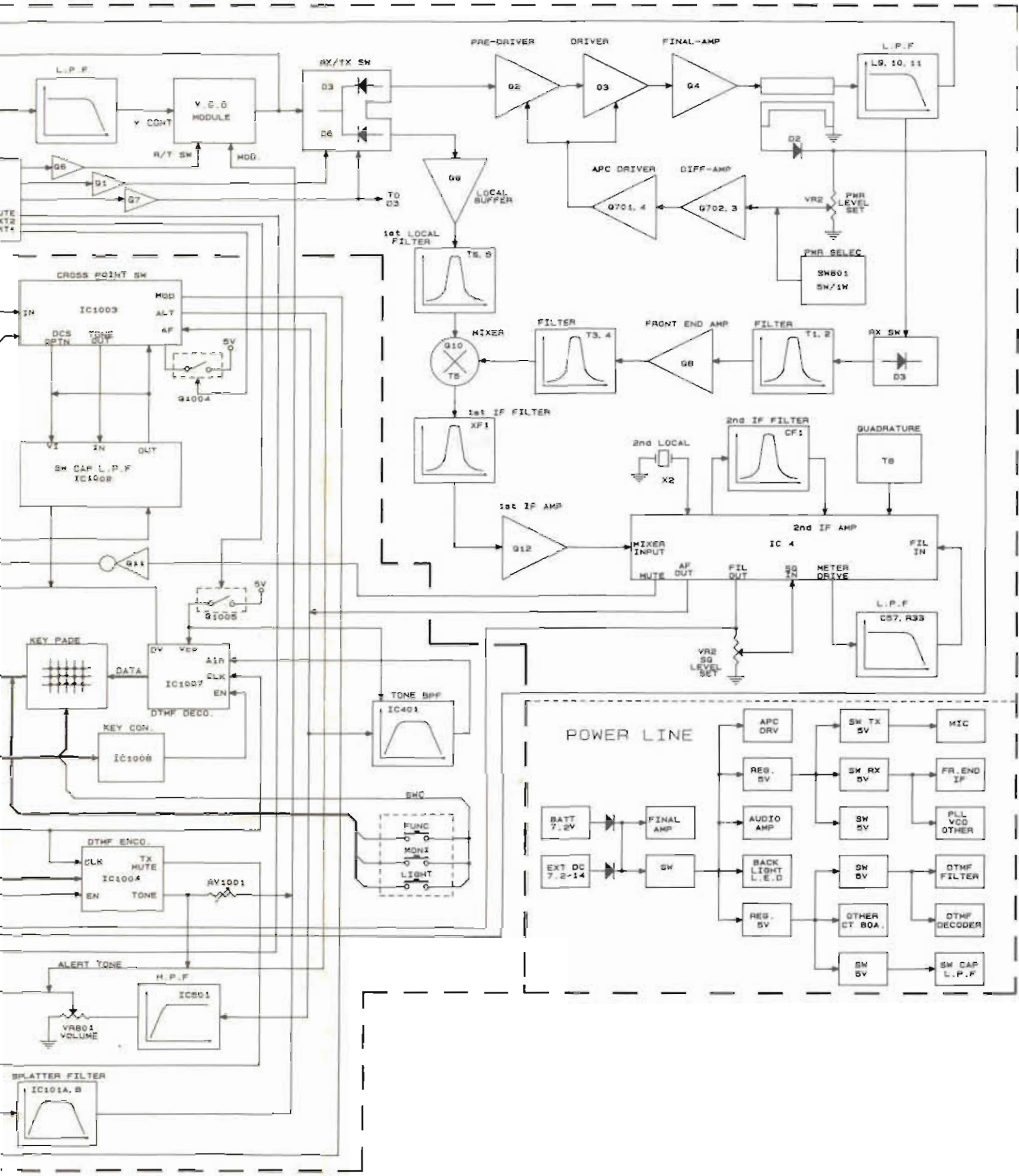

THEORY OF OPERATION

The 19-1120 radios are comprised of two main populated PCBs (an RF PCB and a Control PCB). The RF PCB contains the Transmitter and Receiver circuits. The control PCB contains the Microprocessor controller and associated digital circuits and the Keypad PCB.

TRANSMITTER

The transmitter is comprised of:

a Microphone Audio Circuit
a Transmitter Stage and Harmonic Filter
an automatic Power Control
and a Frequency Synthesizer Circuit

Microphone audio circuit

The audio signals from the microphone (via CON1001, pin3) or the external microphone via Mic jack J4, flexible pin 2 are amplified, pre-emphasized, and limited by IC101 and associated components. The AF microphone signal is applied to MIC module to produce an amplified and pre-emphasized audio signal. The signal is limited by IC101C/D and applied via VR1 to a lowpass filter (IC1-1A/B). The lowpass filter rejects frequencies above 3kHz (outside the voice spectrum). The filtered signal is applied to the VCO pin 7 (within the frequency synthesizer circuit). RV1 is used to adjust voice deviation.

Transmitter stage and harmonic filter

The power amplifier contains transistors Q2 to Q4. When in transmit mode of operation diode D1 is forward biased enabling the RF signal to pass to the input buffer Q2. The buffered RF signal is further amplified by power amplifier driver transistor Q3. C3 couples Q2 to Q3. L3, C3 and C6 are configured to provide filtering with impedance matching. The output from Q3 is impedance matched by C7, C8, L6 and C11 and passed to the power amplifier Q4. Diode D3 is reverse biased inhibiting the TX signal through the receiver stage. The amplified RF signal passes through the stripline coupler and is fed to the harmonic lowpass filter comprising C17 and L10, C22, L11, C23, and then to the antenna connector (ANT).

The coupler provides a sample of the RF signal for the automatic power control.

Automatic power control

The automatic power control is modulized as the combination of Q701 to Q704 and contains the stripline coupler, diode D2 and variable resistor VR2, two comparators (Q703 and Q702) and transistors Q704 and Q701. The RF signal present in the coupler is rectified by D2, to produce a DC voltage that is passed to VR2. The DC voltage is also applied to pin 3 of Q703 via VR2. The voltage TX 5V is applied to the base of Q702 via a potential divider. Q702 and Q703 determines the RF power level by producing a difference signal. The difference signal is passed to Q701 and Q704 to produce a constant power output to the antenna connector ANT. VR2 is used to adjust the RF power level.

Frequency synthesizer circuit

With data received from the microprocessor (IC1006), the frequency synthesizer circuit controls and produces the RF carrier frequency for the transmitter during transmit and the local oscillator frequency for the receiver.

The frequency synthesizer circuit is comprised of

- a RX and TX Voltage controlled Oscillator Module
- a Loop Filter
- a PLL frequency synthesizer & prescaler chip

RX and TX voltage controlled oscillator module

A VCO module produces carrier frequencies during transmit and the local oscillator frequency during receive. The module also has a power line filter.

RX and TX power line filter

Transistor Q201 is configured as 5V (module, pin 1) power supply ripple filter.

RX VCO

The RX VCO is comprised of JFET Q204,coil L202 and varactor D202 and is configured as a Colpits oscillator. D202 produces a change in frequency with a change in DC voltage and is controlled by the phase detector signal (via module pin 6) present at the anode. The local oscillator signal at the drain of Q204 is applied to pin 4 of the module, when diode D1 is reverse biased and D6 is forward biased. L202 is used for PLL alignment.

TX VCO

The TX VCO is comprised of JFET Q204, coil L202 and varactor D202 and trimmer capacitor TC202 and is configured as a Colpits oscillator. The AF signal at Mic Amp. module pin 6 is applied to the anode of D202 via pin 3 of the module. The control voltage from the loop filter is applied to the cathode of D202 (vid a module pin 6). The TX RF modulated signal produced at the drain of Q204 (module, pin 4) is passed to the power amplifier and harmonic filter via the buffer amplifier (Q2), when diode D1 is forward biased and D6 is reverse biased. TC201 is used for PLL alignment.

Loop filter

Transistors Q14 and Q15 and resistors R46 to R51 and capacitors C79 to C82 form the loop filter. The phase detector from pin 13 of IC1 is filtered to remove any reference frequency harmonics and then applied to the RX and TX voltage controlled oscillator module, pin6.

PLL frequency synthesizer

The PLL frequency synthesizer contains an oscillator for the reference crystal, a reference divider, a programmable divider, a phase/frequency comparator, an out of lock detector and a prescaler.

Reference oscillator

The reference oscillator of IC1 along with a 12.8MHz crystal X1, TC1, C76, C77 produces a 12.8MHz reference signal at pin 1 & 2 of IC1.

IC1 has two dividers, a data programmable divider and a programmable reference divider.

Phase detector

The phase detector (pin13) produces negative pulses when Fv<Fr and positive pulses when Fv> Fr. When Fv=Fr and phase is the same the phase detector presents a high impedance at pin 13. The signal at pin 13 is applied to the VCO via the loop filter.

Out of lock detector

The out of lock detector produces a high logic level when Fr and Fv are in the same phase and frequency, or low logic level pulses when the loop is out of lock at pin 11 of IC1. The signals at pin 11 of IC1 are buffered by Q13 then integrated by R45 and C78. The product of the integrating circuit is fed to flexible PCB 22.

Prescaler

The internal prescaler divides the VCO frequency by 16 or 17.

RECEIVER

The Receiver uses dual-conversion superheterodyne techniques and comprised of:

- an RF Amplifier
- a First Mixer and First IF Amplifier
- a Second Mixer, Second IF Amplifier and FM Detector
- a Receiver Audio circuit
- a Mute (Squelch) circuit

RF amplifier

The receiver RF amplifier contains coils T1 to T4 and MOS FET Q8. Coils T1 to T4 are T3, T4 are configured as 2-pole bandpass filter. The RF signal passes through the tuned circuit T1 and T2, RF amplifier Q8 and T3 and T4, enabling the RF signal at the operating frequency to pass to the first mixer.

First mixer and first IF amplifier

FET Q9, Q10 and crystal filter XF1 and coils T5 to T7 from the First IF amplifier. The VCO local oscillator signal, via buffer transistor Q9, is filtered by T6 and T7. Q10 produces a difference frequency of 21.4 MHz at the drain connection, from the filtered RF signal at the gate connection and the filtered VCO local oscillator signal at the source connection. The 21.4MHz difference frequency is filtered by the 2-pole crystal filter XF1. The tuned circuit T5 and associated components provide matching of the crystal filter to insure good passband response and sensitivity. The IF signal is amplified by Q12 and passed to the second mixer, second IF, and FM detector.

Second mixer, second IF, and FM detector

A single conversion FM receiver integrated chip, IC4 contains the second mixer, second IF, and FM detector functions. The second local oscillator frequency is determined by the crystal X2 connected to pin 1 of IC4. The IF signal is received at pin 16 of IC4 via R38 and coupling capacitor C60. The second IF frequency of 455 KHz is produced when the difference frequency is applied to the mixer via pin 6. The output of the second mixer via pin 3 is applied to a 455 KHz bandpass filter, CF1. The output of CF1 is passed to a high gain IF amplifier (limiter) in IC4 via pin 5. The amplified signal is coupled to the adjustable quadrature detector T8. Any detected signal is produced at pin 9 of IC4 and applied to the receiver audio circuit.

Receiver audio circuit

The receiver audio circuit is comprised of an audio and a high pass filter module and de-emphasis circuit on the RX/TX PCB.

High pass filter module

CTCSS signals from the recovered audio signal is removed by the high pass filter. The high pass filter is a 8-pole active filter that is comprised of IC501 and associated components. The de-emphasis is provided by resistor R42 and capacitor C70. The de-emphasized audio signal at CON2, connection 6 is fed to the audio amplfier on the RX/TX PCB, via the volume PCB's VR801.

Audio amplifier module

IC601 is the audio amplifier. The audio signal at CON2, pin5 is passed to IC601, pin3 via variable resistor VR801 (located on the front panel). The gain of the amplifier is set by resistor R603 and C602. The amplified audio signal at pin 5 of IC601 is applied to the internal speaker SPKR by flexible PCB (pin 5). The external speaker connection is via the connector JACK 3.

Mute (squelch) circuit

The squelch circuit switches off the audio power amplifier in the absence of RF signals. The squelch circuit is comprised of internal carrier detector, squelch control and VR802.

Internal detector circuit

The carrier signal is detected by IC4 pin 13 and regulated by C57 and R33, and then DC amplified by the internal amplifier circuit via IC4, pin 10. The amplified signal is applied to IC4 pin 12 via SQ VR802 and then is converted to Logic Level by internal comparator of IC4. The output level is buffered and reverse phased by Q12 and is applied as the busy signal to the microprocessor by flexible PCB pin 10.

MICROPROCESSOR CONTROLLER

The default of all functions in the radio is preset by the internal programmed microprocessor and any other user's options including the frequencies of Receive and Transmit are available by the microprocessor and associated interfacing circuit.

Microprocessor

The microprocessor is a high speed Hitachi HD404808 4K-byte ROM with 4-bit access. It contains the LCD Driver, I/O Controller, Voltage Comparator. When the radio turns on, the microprocessor is power-on reset by C1021 of pin 78 to operate in the preset order in the masked ROM. When the radio turns off, the data in RAM are kept stored by the backup battery with about 2μA current from BAT1001 to pin 13.

POWER SWITCHING CIRCUIT

When the PTT switch is pressed, the enable and clock data are forwarded by the microprocessor to IC1 pin 5, 6, 7, and to IC2 pin 1, 2, 3. When IC2 receives the enable and clock data, it holds pin 2 low, causing Q1 to turn on, and holds pin 14 high, causing Q7 to turn off. It reverses this in receive mode.

CTCSS/DTMF ENCODE AND DECODE CIRCUIT

CTCSS Receive

The detected audio signal is applied to IC1003 pin 11 for being switched out to pin 12, and then applied to pin 8 to compare with OP AMP and passed to pin 3 to be applied to pin 13 through C1005 and R1005. It is further amplified and referenced by OP AMP to be passed to pin 14. Again by the same procedure it is forwarded in to pin 1 and out to pin 2 to apply to the microprocessor pin 31 for the microprocessor control.

CTCSS Transmit

The data received from the microprocessor pin 17, 18, and 19 are applied to IC1003, pin 10 via R1028, R1029, R1030, and RV1002 for being switched at IC1003. The signal received at IC1002 pin 8 via pin 12 is filtered to pass to pin 3 and then to pin 14 for being switched to transmit by flexible PCB pin 26 via pin 25.

DTMF Decoding circuit

The audio detection output supplied to the Control Board is also applied to the bandpass filter pin 5 and passed to the DTMF Decoding IC (IC1007, pin 8) through the 8th active filter. With a data received from IC1008 it is forwarded to pin 14 to apply to the microprocessor pin 31 for the microprocessor control.

DTMF Encoding circuit

When transmit DTMF is selected, the microprocessor pin 21, 22, 23, 24, and 24 send out the data which is forwarded into IC1004. The cross point switching IC (IC1003) forwards the switched data to IC1004 pin 14 to transmit the DTMF signal through flexible PCB pin 26 via RV1001, C1025 and R1038.

External PTT control circuit

When the external microphone is connected at the MIC Jack on the front panel, the internal microphone is disable and converted to the external microphone by MIC AMP Jack, which is applied to VCO via C61 and also applied to the level PCB pin 1, to output to the level PCB pin 2. Then the microprocessor pin 11, being pulled as logic high via R1036, becomes logic low to enable it to operate like the internal PTT circuit.

Channel select circuit

The channel switch encodes the channel number selected into binary word. The binary word is passed through RF flexible PCB and top panel PCB to the microprocessor pin 12, 13 for microprocessor control.

Signal level indicator

The received signal is applied to IC4, pin 11 to compare with the reference level via R32 and is passed to the level PCB pin 8 for the input to the microprocessor. The microprocessor then displays the TX level.

TX level indicator

The transmitted signal is applied to the level PCB IC301 B via a direction coupler D2, RV3 and R31 to compare with the reference TX level and is passed to the level PCB pin 8 for the input to the microprocessor. The Microprocessor then enables the TX level indicated on the display.

Battery low indicator circuit

In case the battery voltage drops below 6V approximately (it may depend on the voltage of the battery or power supply), the voltage comparator is applied to the level PCB pin 4 via R308 to compare with the reference and is passed to the level PCB pin 3. The microprocessor then enables BATT

ALIGNMENT INSTRUCTIONS

1. Alignment Test Point and Parts Locations

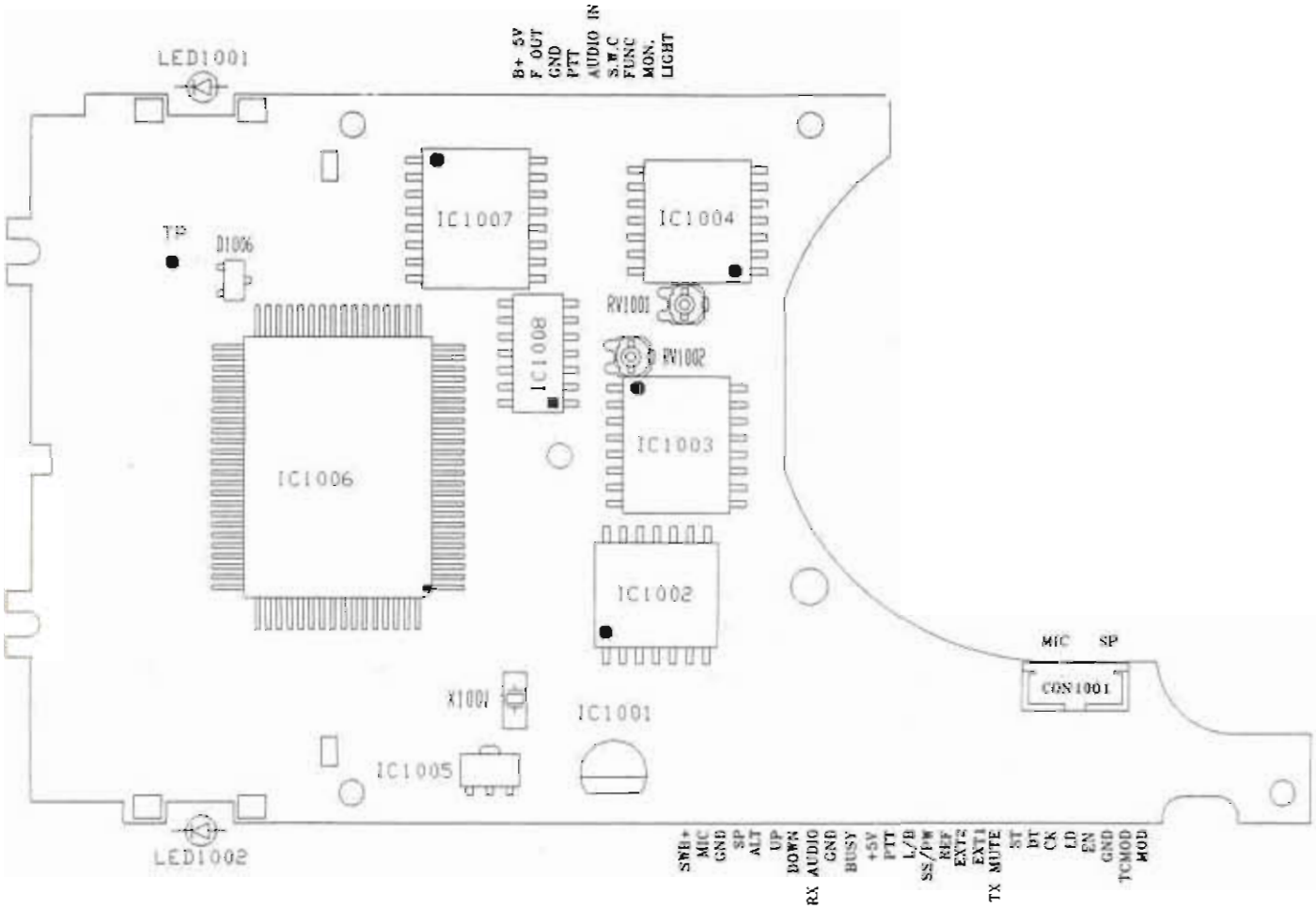

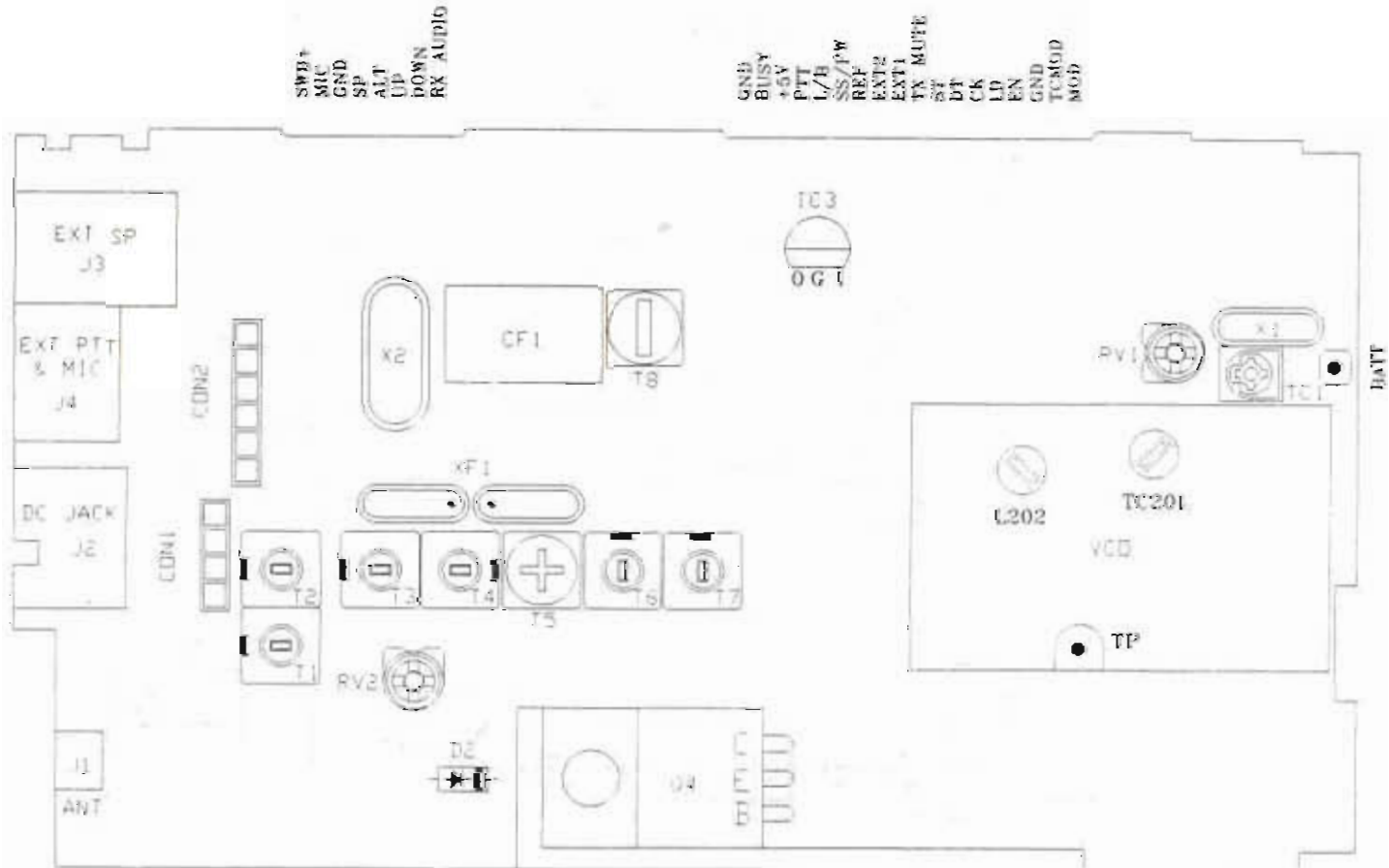

2. Phase Locked Loop and CPU Section

A. Test Equipment Required

a. Frequency Counter

b. DC Power Supply

c. DC Voltmeter (Input Impedance 10 ohms)

d. RF attenuator (20dB, Impedance 50 ohms)

B. Allignment Procedure

Step	Setting	Connection	Adjust	Adjust for
1	RX VCO Voltage adjustment Frequency : 144.200 MHz MIC : Receive Function : None Volume : Optional Squelch : Optional	DC Voltmeter to pin 6 of VCO (figure 1-1)	L202	1.6-1.8V DC
2	TX VCO Voltage adjustment Frequency : 144.200 MHz MIC : Transmit (unmodulation) Function : None Volume : Optional Squelch : Optional	DC Voltmeter to pin 6 of VCO (figure 1-1)	TC201	1.8-2V DC
3	Frequency adjustment Frequency : 146.000MHz MIC : Transmit (unmodulation) Function : None Volume : Optional Squelch : Optional	ANT. to frequency counter, through attenuator (figure 1-2)	TC1	1.7V DC (1.6-1.8V DC) and 1.9V DC (1.8-2V DC)

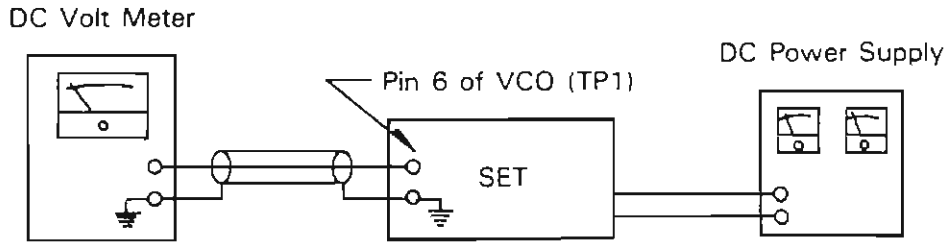

(Figure 1-1)

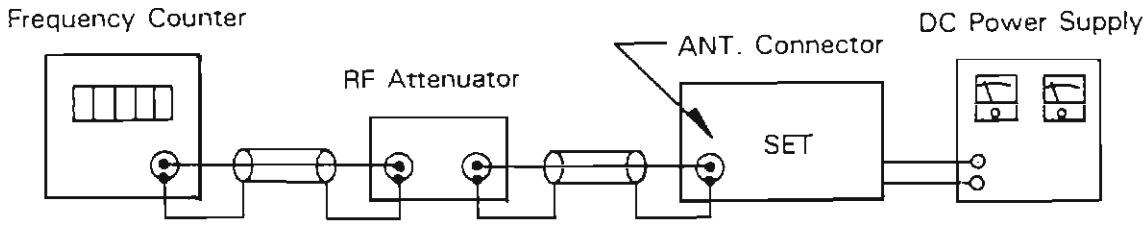

(Figure 1-2)

3. Transmitter Section

A. Test Equipment Required

a. RF Power meter (RF SSVM)
b. 50 ohm dummy load (non-inductive)
c. RF Attenuator (50 ohms: non-inductive)
d. Oscilloscope
e. Audio Generator
f. DC Power Supply
g. Spectrum Analyzer
h. Frequency Counter
i. Coupler
j. Modulation meter (FM)

B. Alignment Procedure

Step	Setting	Connection	Adjust	Adjust for
1	AF. Modulation adjustment Frequency : 146.000MHz MIC : Transmit Function : None Volume : Optional Squelch : Optional RF Power selection : High	Connect the audio generator (Set to 1KHz) to the microphone jack. Connect the modulation meter through the RF attenuator to the ANT jack. Adjust the audio signal level to obtain 3KHz deviation. When you increase the audio signal by 20dB, the deviation should not exceed 5KHz deviation (Figure 2-1)	RV1	3.8KHz (3.5 ~ 4K)
2	CTCSS modulation adjustment Frequency : 146.000MHz MIC : Transmit Function : Tone squelch mode (CTCSS: 100Hz) Volume : Optional Squelch : Optional RF power selection: High	Connect the short plug to microphone jack. Connect modulation meter through RF attenuator. Connect RF power meter to EXT-ANT jack on the set. (Figure 2-2)	RV1002	0.7KHz (500 ~ 1KHz)
3	DTMF modulation adjustment Frequency : 146.000MHz MIC : Transmit Function : DTMF squelch mode Volume : Optional Squelch : Optional RF power selection: High	Connect the short plug to microphone jack. Connect modulation meter through RF attenuator to EXT-ANT jack on the set. Press a number botton on the set. (Figure 2-2)	RV1001	3.8KHz (3.5 ~ 4K)

4	Low power adjustment Frequency : 146.000MHz MIC : Transmit Function : None Volume : Optional Squelch : Optional RF power selection: Low	Connect the short plug to microphone jack. Connect the dummy load to EXT-ANT jack on the set through RF power meter. (Figure 2-3)	RV2	1W (0.8~1.2W)

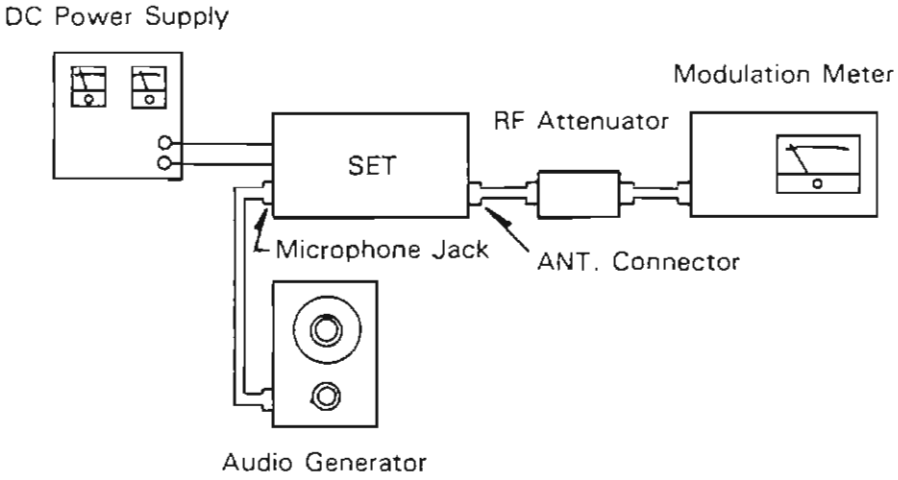

(Figure 2-1)

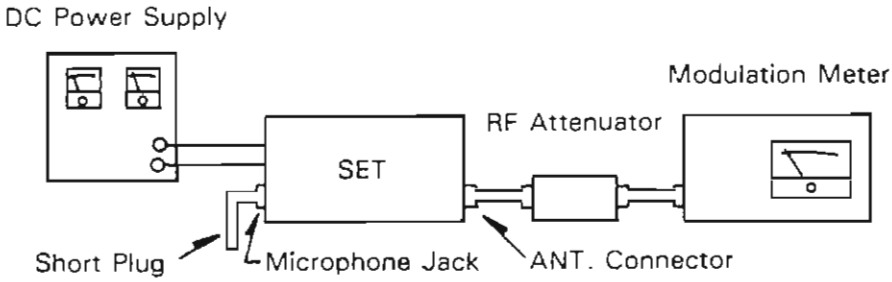

(Figure 2-2)

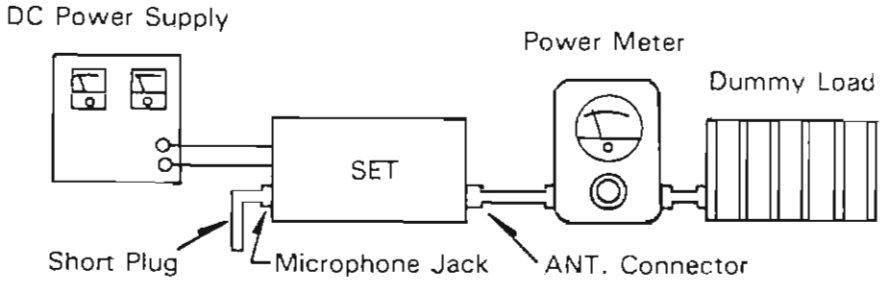

(Figure 2-3)

4. Receiver Section

A. Test Equipment Required

a. Standard Signal Generator (SSG)

b. AC Level meter

c. Distortion meter

d. DC Power Supply

e. 12dB Sinadder meter

B. Alignment ProcedureA

Step	Setting	Connection	Adjust	Adjust for
1	RX sensitivity adjustment Frequency : 144MHz-148MHz MIC : Receive Function : None Volume : Adjust for 1V on the level meter. Squelch : Turn fully counterclockwise SSG: Audio 1KHz Modulation 3KHz	Connect standard signal generator to EXT-ANT jack. Connect AC volt level meter, distortion meter and sinadder meter across EXT speaker jack with 8 ohm dummy load. (Figure 3-1).	T8 T7 T6 T4 T3 T2 T1	Maximum indication on AC level meter. Maximum sensitivity indication on 12dB sinadder meter. In the above condition, sensitivity is flat for 144 - 148MHz
2	Distortion adjustment Frequency : 146.100MHz MIC : Receive Function : None Volume : Adjust for 1V on the AC level meter Squelch : Turn to counterclockwise SSG: Audio 1KHz Modulation 3KHz	Connect standard signal generator to EXT-ANT jack. Connect AC volt level meter, distortion meter across EXT speaker jack with 8 ohm dummy load. (Figure 3-1)	T5	Maximum indication on distortion meter.

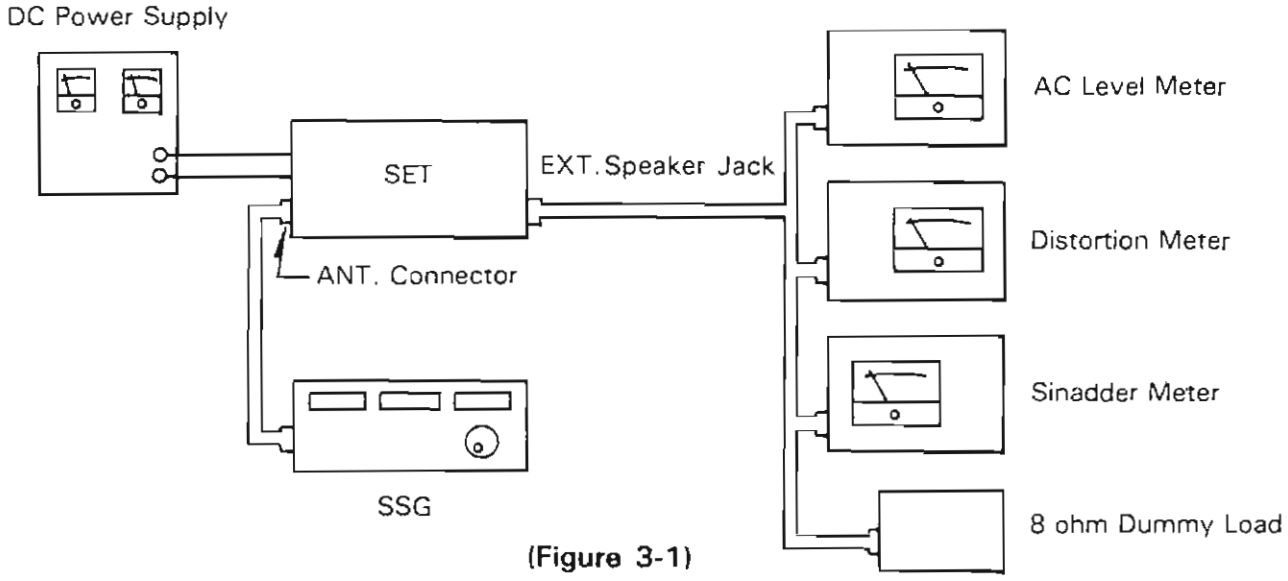

(Figure 3-1)

TROUBLESHOOTING HINTS

Symptom	Probable Cause	Remedy
Unit does not work at all	1. Defective power switch VR801 2. Defective Diode D4, D5 3. Broken DC power cord	1. Replace 2. Replace defective component (s) 3. Replace
No output from speaker at all	1. Defective external speaker jack 2. Poor connection on microphone Connector 3. Measure all the voltage of sub board of audio PCB 4. Defective internal speaker	1. Repair or Replace 2. Repair or Replace 3. Repair or Replace 4. Replace
No noise on speaker	1. Measure all the voltage of audio PCB. 2. Defective squelch circuit components. (VR802, C57, C58, R28, R29, R30, R33, R34, R36, R1022, Q11, pin 9 of IC1006) Compare with the voltage chart	1. Repair or Replace 2. Replace defective component (s)
Squelch does not work	1. Defective squelch circuit components (VR802, C57, C58, R28, R29, R30, R33, R34, R36, R1022, Q11 pin 9 of IC1006) Compare with the voltage chart	1. Replace defective component (s)
No modulation	1. Defective microphone 2. Measure all the voltage of sub board of MIC PCB 3. Defective TX mute circuit components (Q5, R3 pin 8 of IC1004) compare with the voltage chart.	1. Replace 2. Replace 3. Replace defective component (s)
LCD Display does not work	1. Measure all the voltage of IC1005, D1001, X1001 (pin 77 of IC1006)	1. Replace defective component (s)
Back light does not work	1. Defective the components of LED1001, LED1002, Q1001, Q1002, Q1003.	1. Replace

1. Internal RAM Error: Er1

Er1 indicates an internal RAM error. It appears when the memory backup battery is dead or when something else has caused the memory contents to become corrupt. To clear the error, turn on the unit while holding down the function button and D. This clears the memory.

If the error returns after you disconnect power, check the following components:

Lithium Battery

Dual-diode RB417E (D1002)

and check for cold solder joints.

2. PLL Unlock Error: Er2

Er2 indicates the PLL has unlocked. Check the following:

A. PLL alignment (from page 17).

B. Check for 5V at Q13, Q14, and VCO pin 1.

C. Confirm that X1 is oscillating. If not, check the connections to IC1, pins 1 and 2.
If the connection is good, check for 5V at IC1, pin16. If 5V not present, check connections to L16 and power.

D. Confirm 5KHz signal at IC1, pin11. If not, check connections to pin 5 (DT), pin 6 (EN), and pin 7 (CK).

E. See if Q13 is in normal condition.

WIRING DIAGRAM

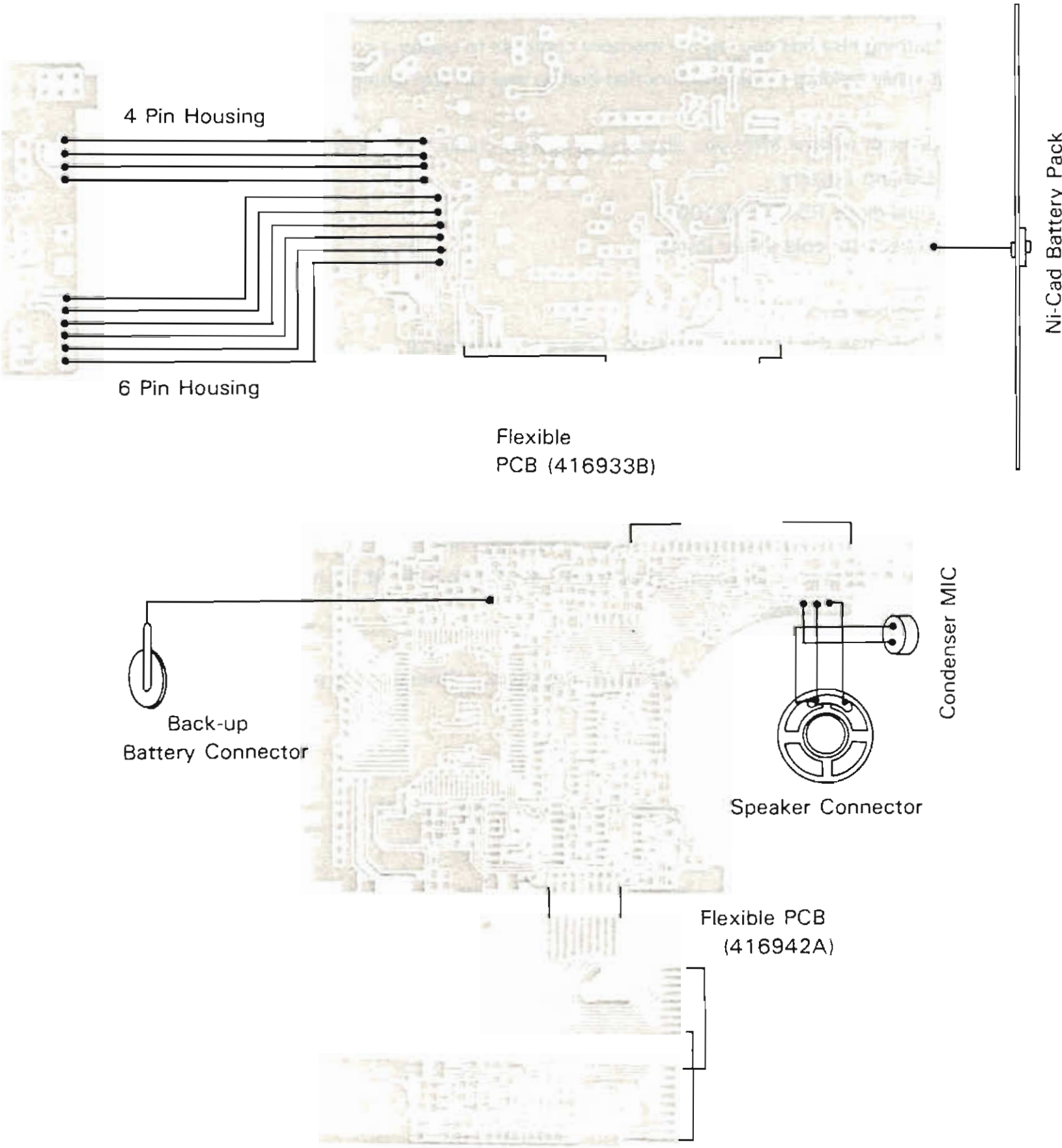

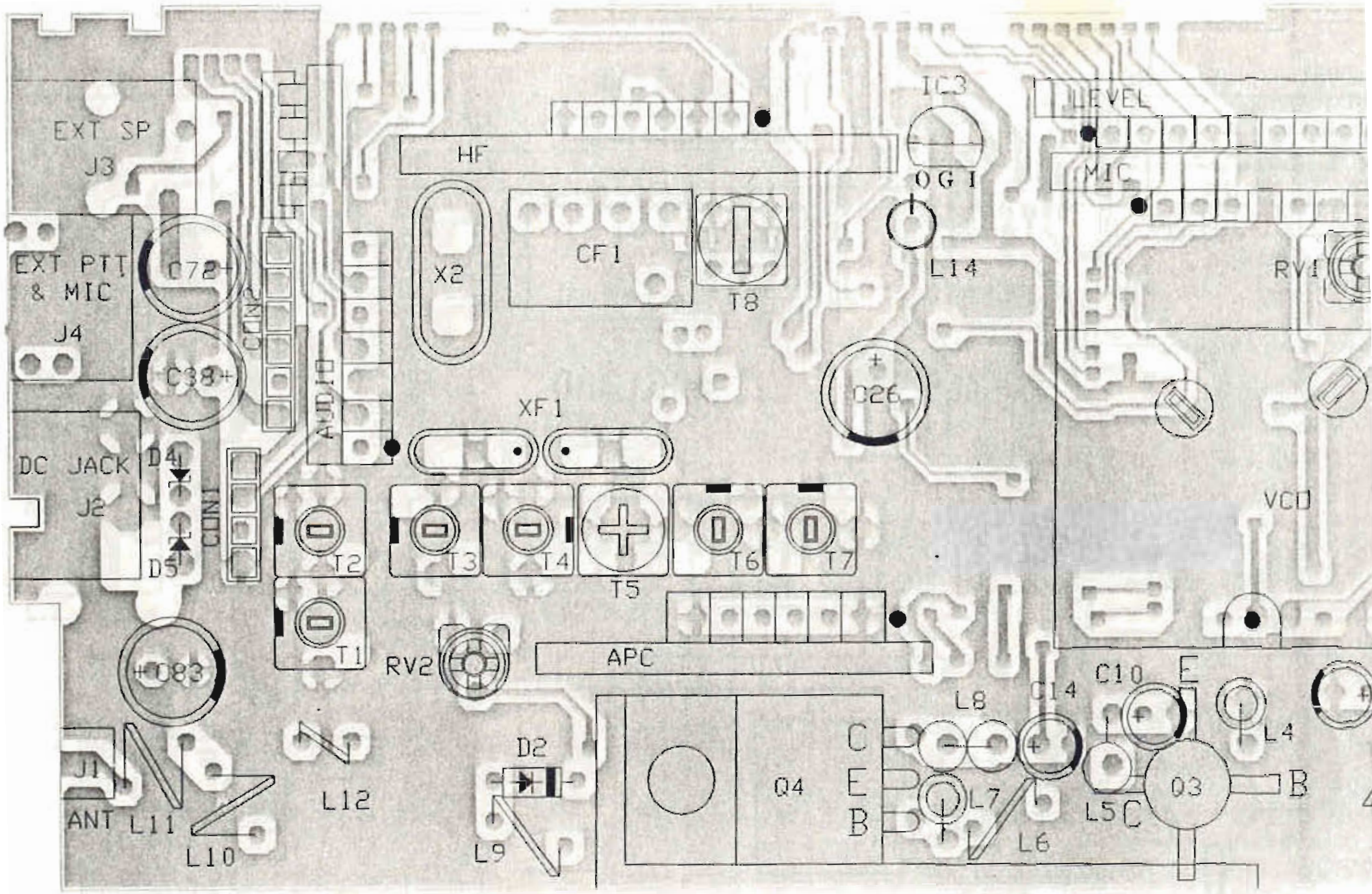
EXT SP
J3
EXT PTT
& MIC
J4
DC JACK
J2
C72
C38
D4
D5
CON2
CON1
AUDIO
X2
HF
CF1
T8
IC3
O G I
L14
LEVEL
MIC
RV1
C26
XF1
T2
T3
T4
T5
T6
T7
T1
VCO
RV2
APC
C83
J1
ANT
L11
L10
L12
D2
L9
Q4
C
E
B
L8
C14
L7
L6
C10
E
L5
C
Q3
B
L4

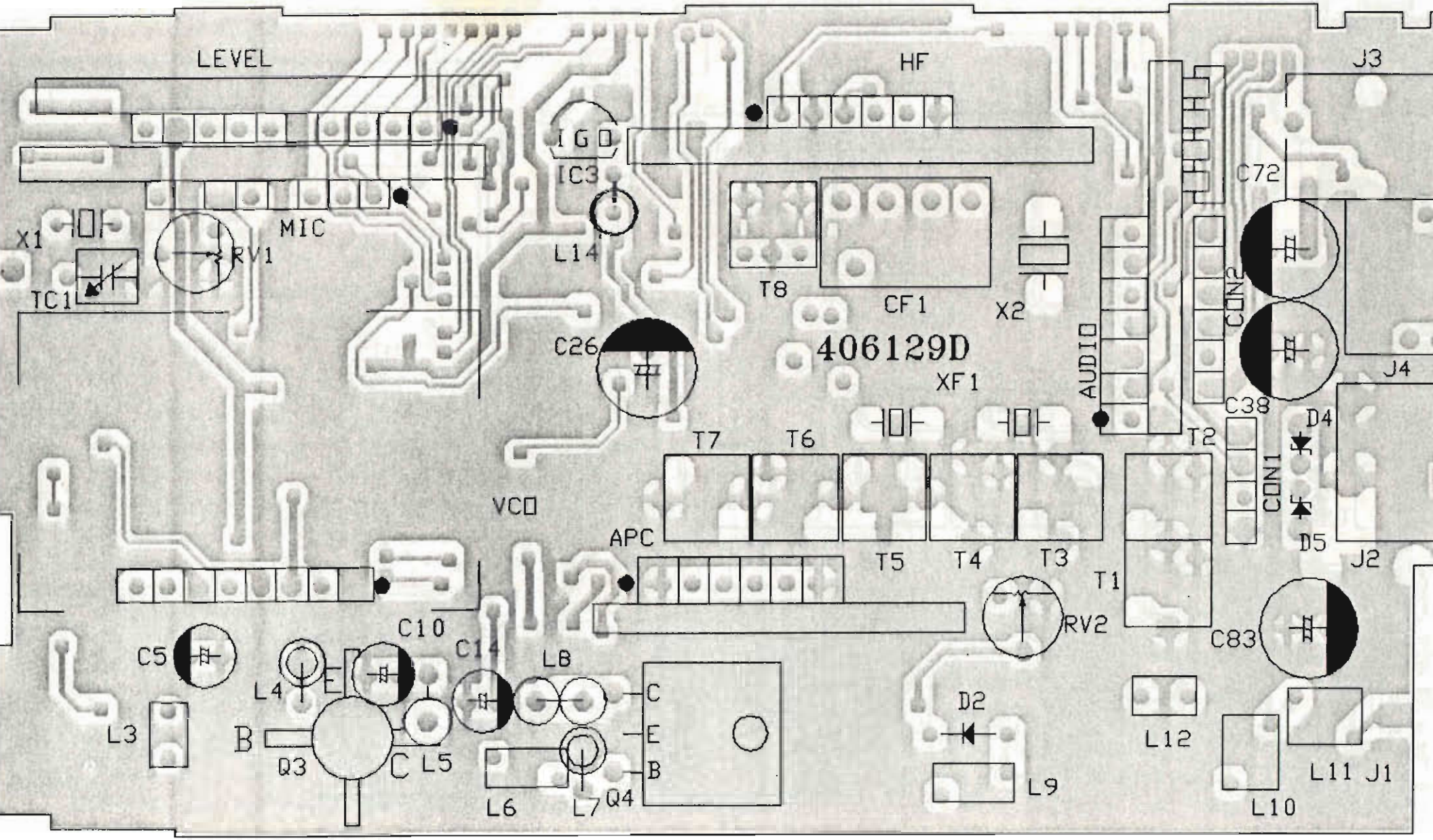
LEVEL
HF
J3
IGD
IC3
C72
MIC
X1
RV1
L14
TC1
T8
CF1
X2
CON2
C26
406129D
AUDIO
J4
XF1
C38
D4
T7
T6
T2
CON1
VCO
D5
APC
T5
T4
T3
J2
T1
RV2
C10
C83
C5
C14
L8
L4
E
C
D2
L3
B
Q3
C
L5
E
L12
B
L9
L11
J1
L6
L7
Q4
L10

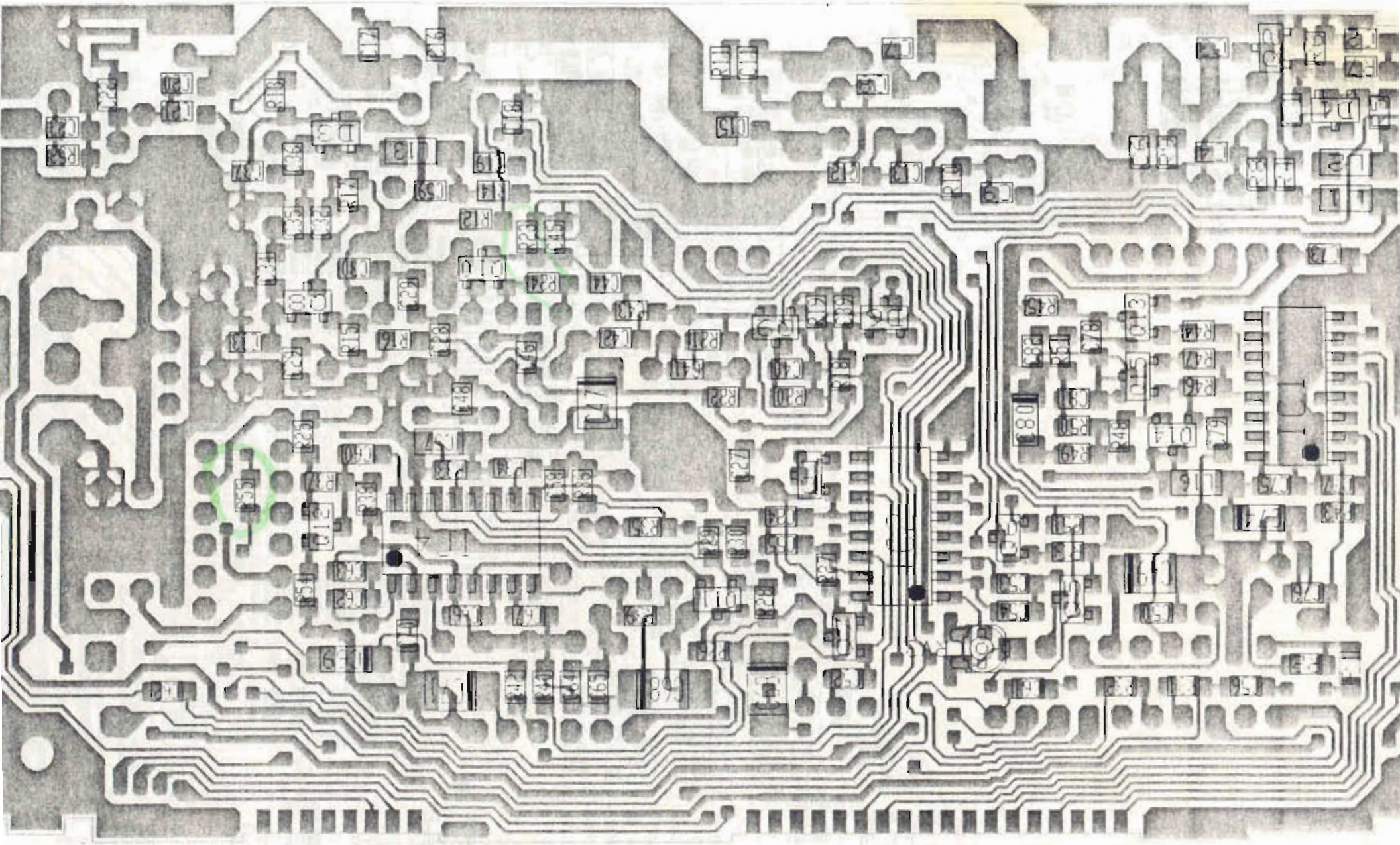

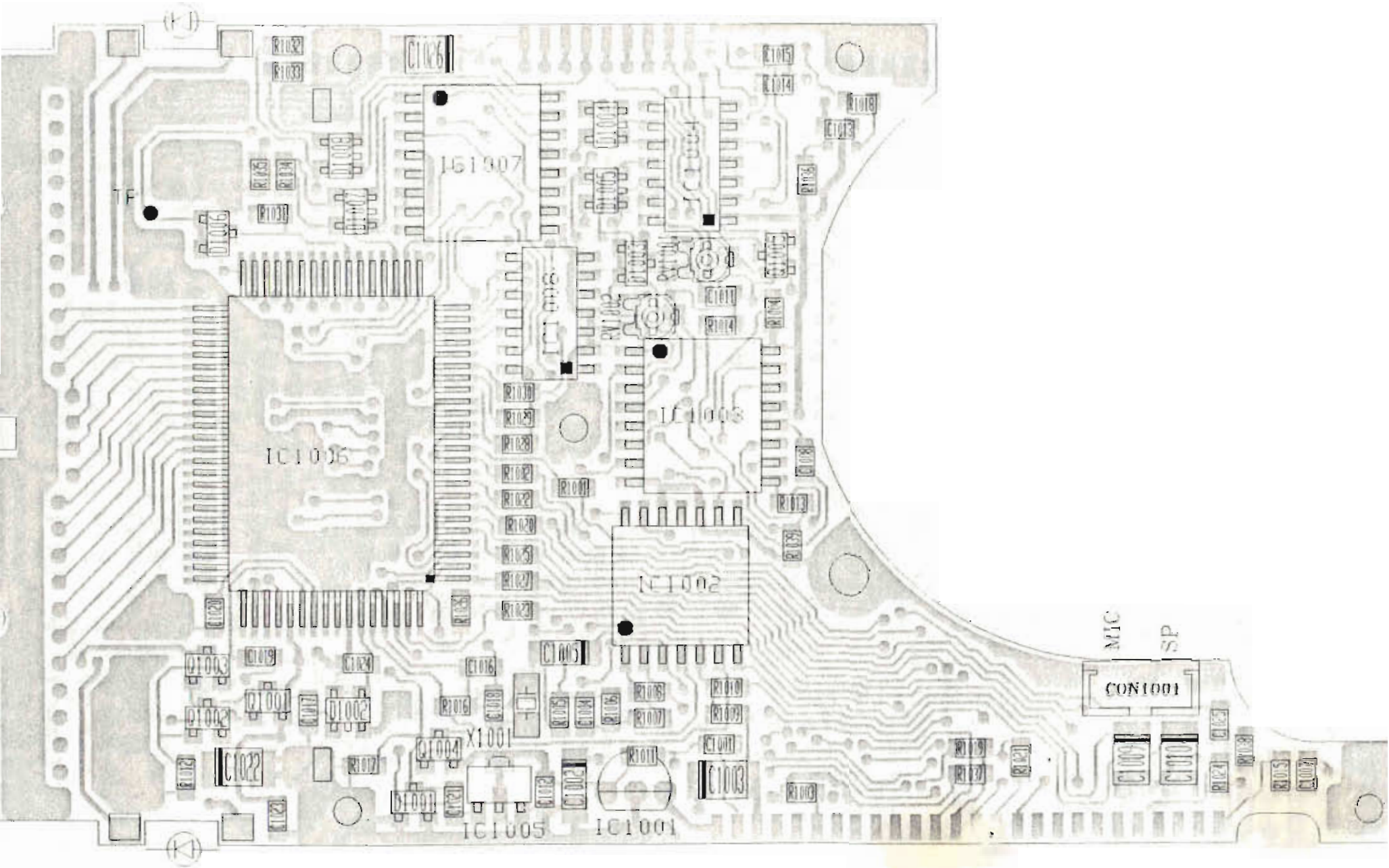
TF
IC1007
IC1004
IC1006
IC1003
IC1002
IC1005
IC1001
X1001
RV1002
MIC
SP
CON1001

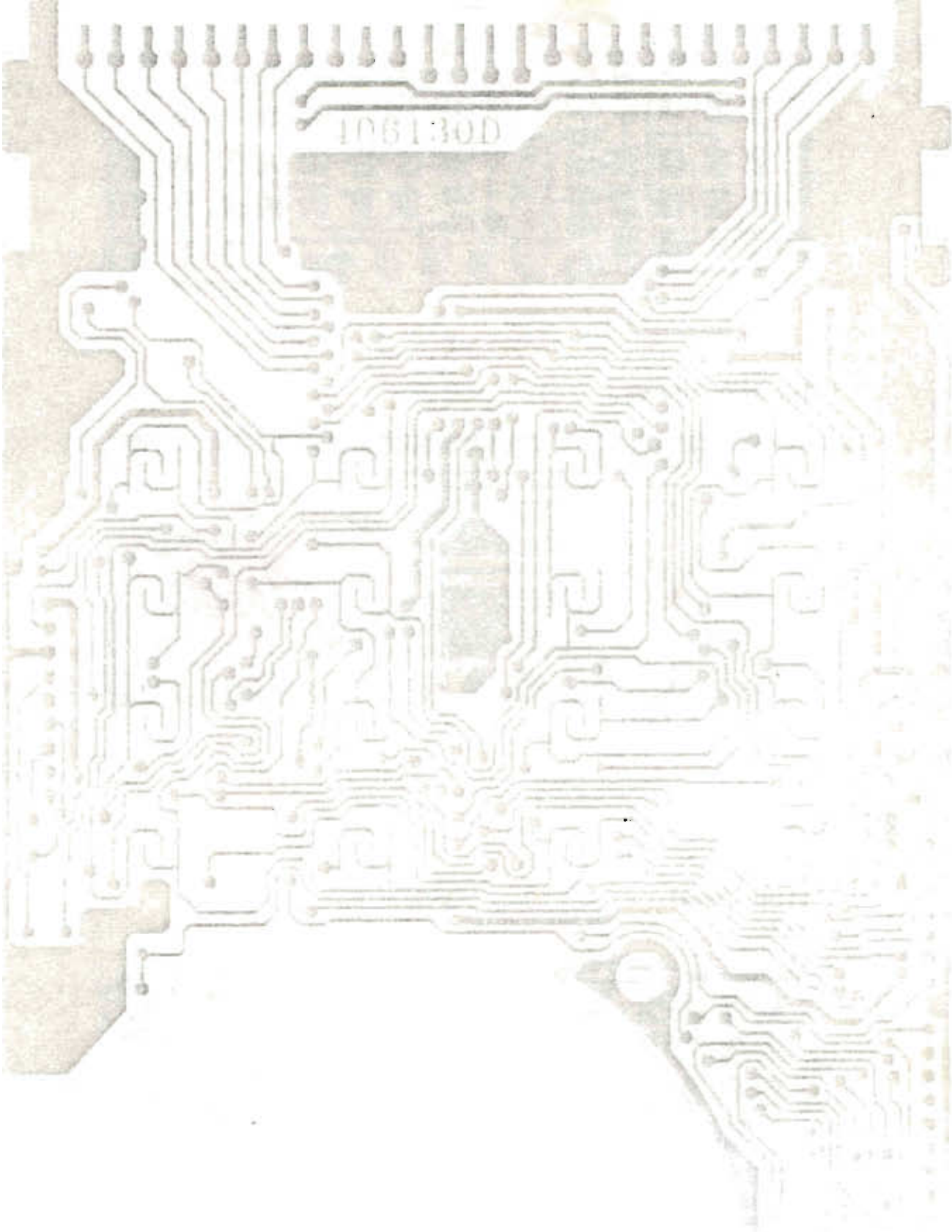
1061130D

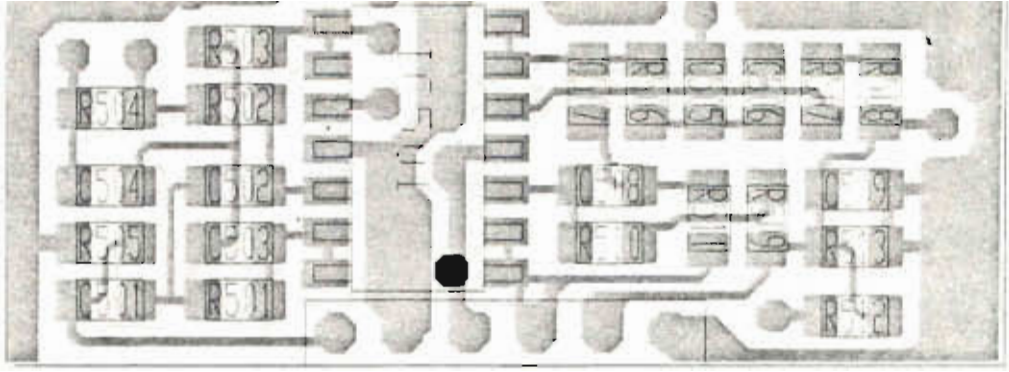

(Bottom View)

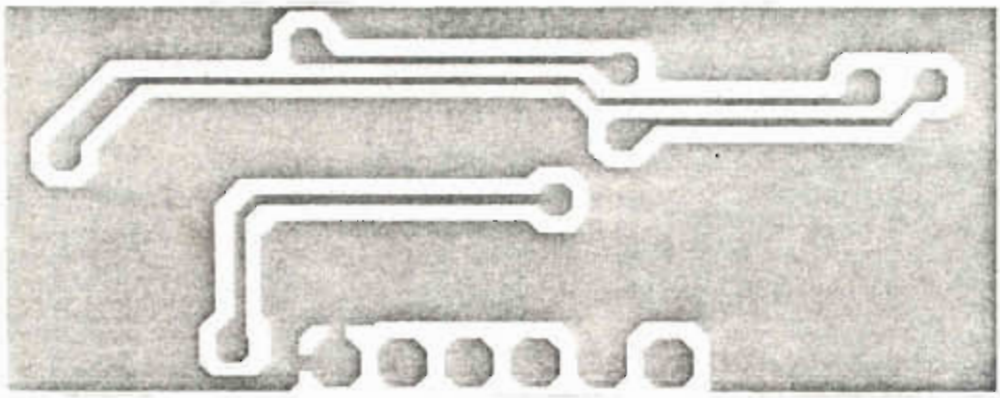

MIC PCB:

(Top View)

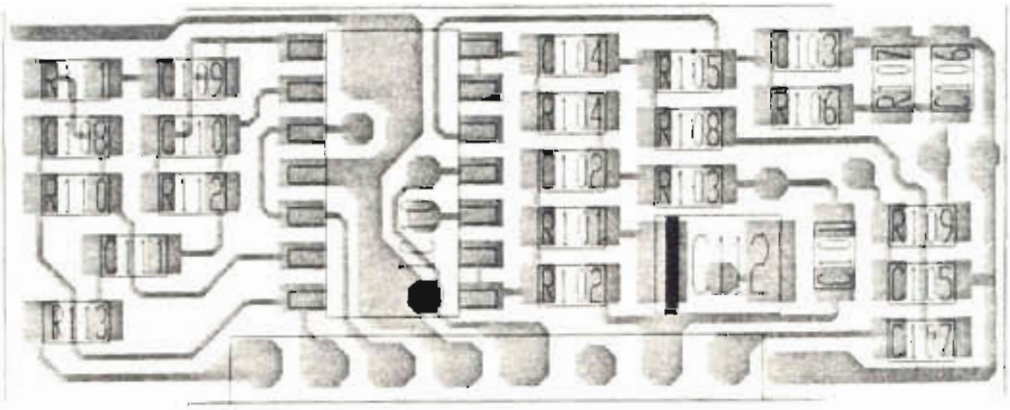

(Bottom View)

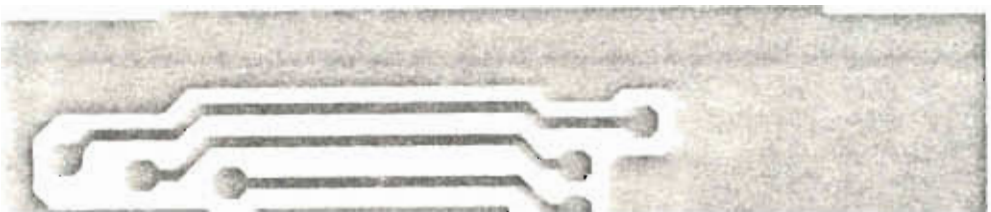

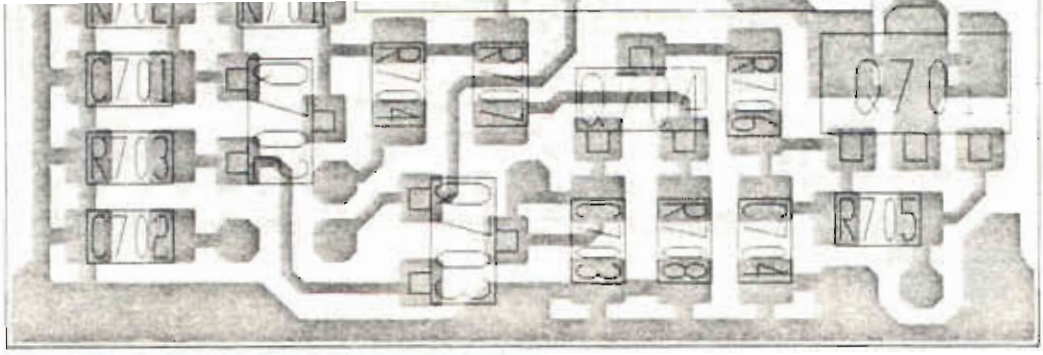

(Bottom View)

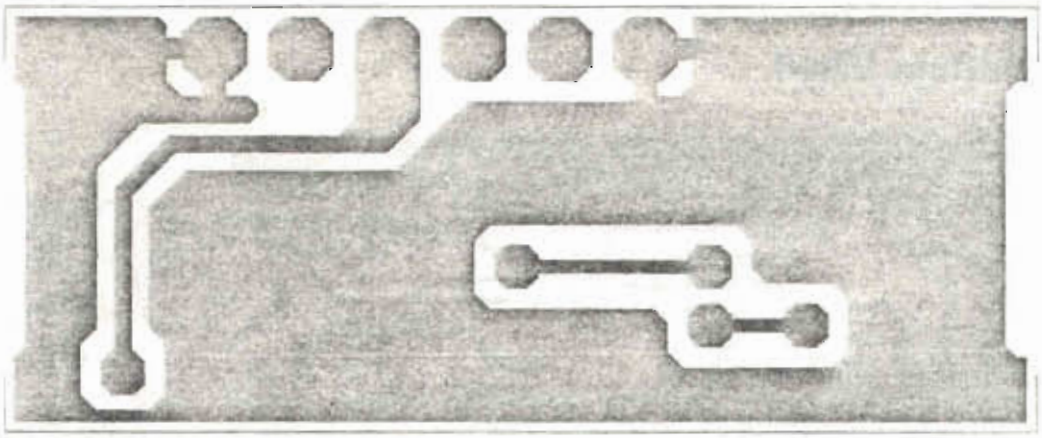

PTT PCB:

(Top View)

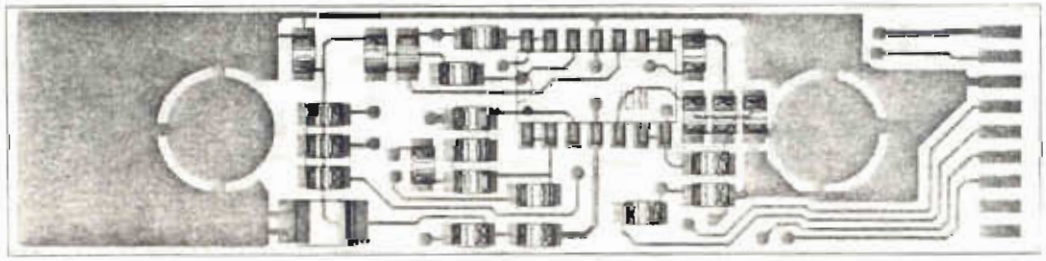

(Bottom View)

(Bottom View)

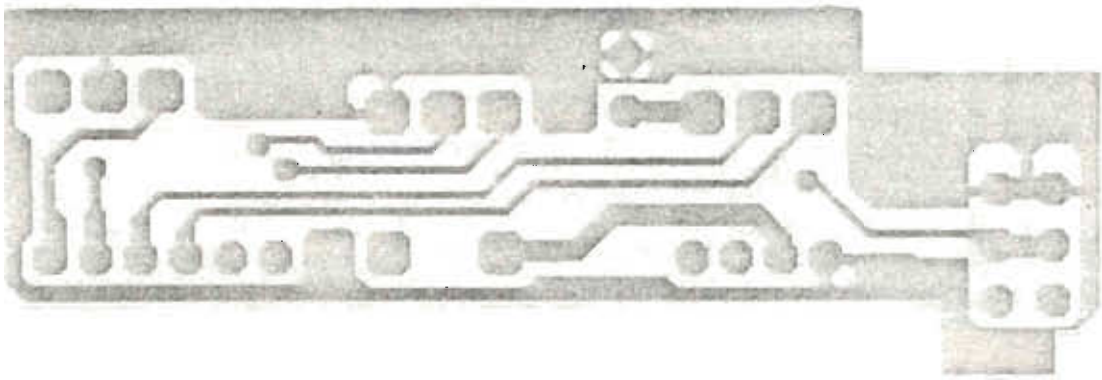

(Top View)

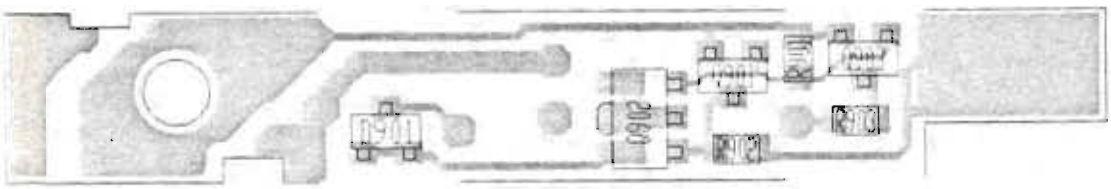

(Bottom View)

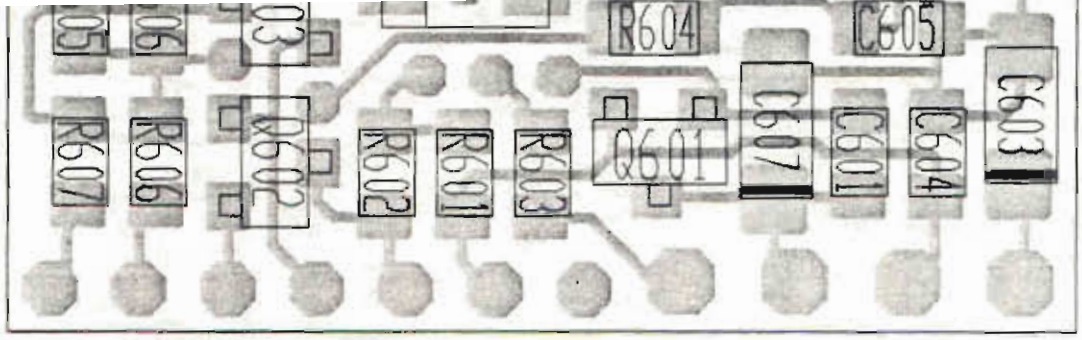

(Bottom View)

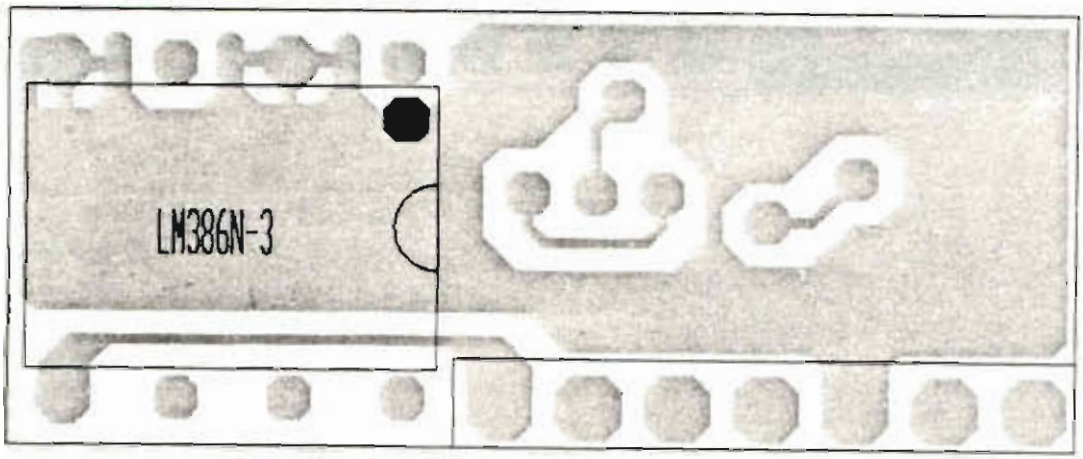

Level PCB:

(Top View)

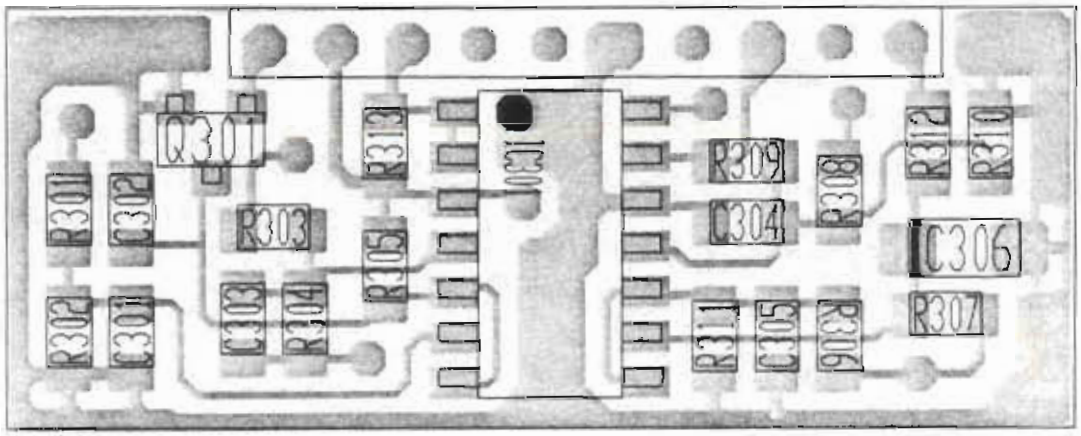

(Bottom View)

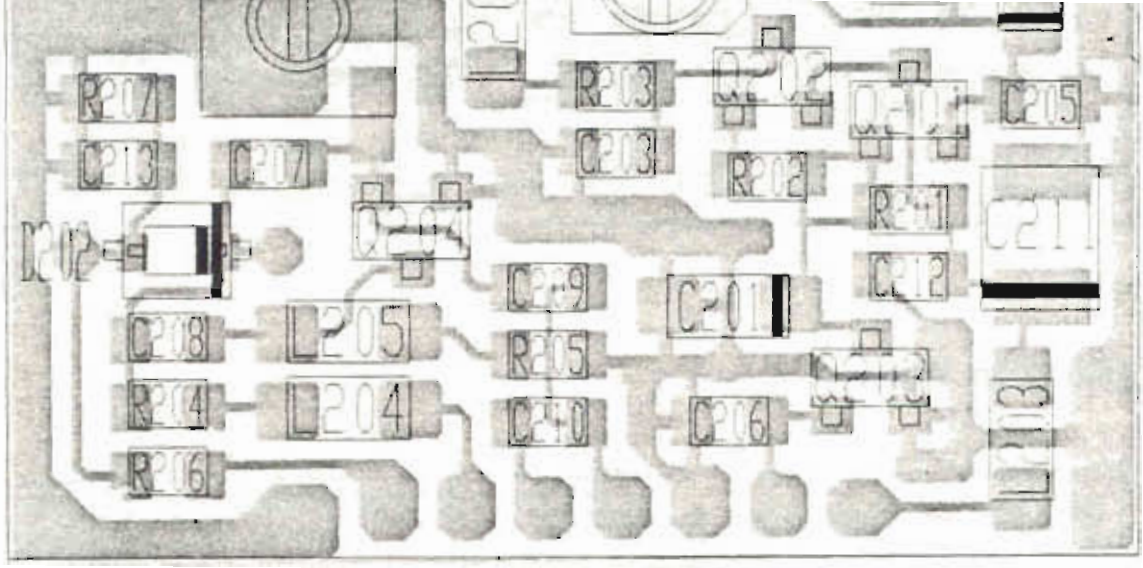
R207
C213
C207
D202
Q204
C208
L205
R204
L204
R206
R203
Q202
Q201
C205
C203
R202
R201
C211
C209
C201
C212
R205
Q203
C210
C206
L208

(Bottom View)

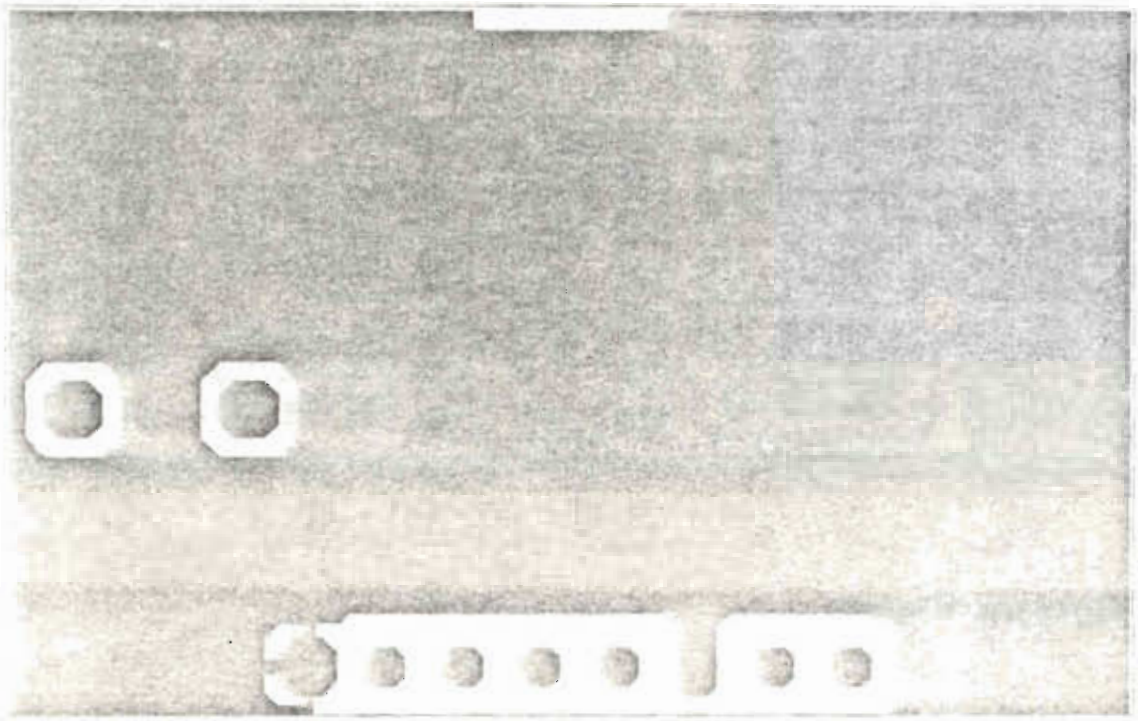

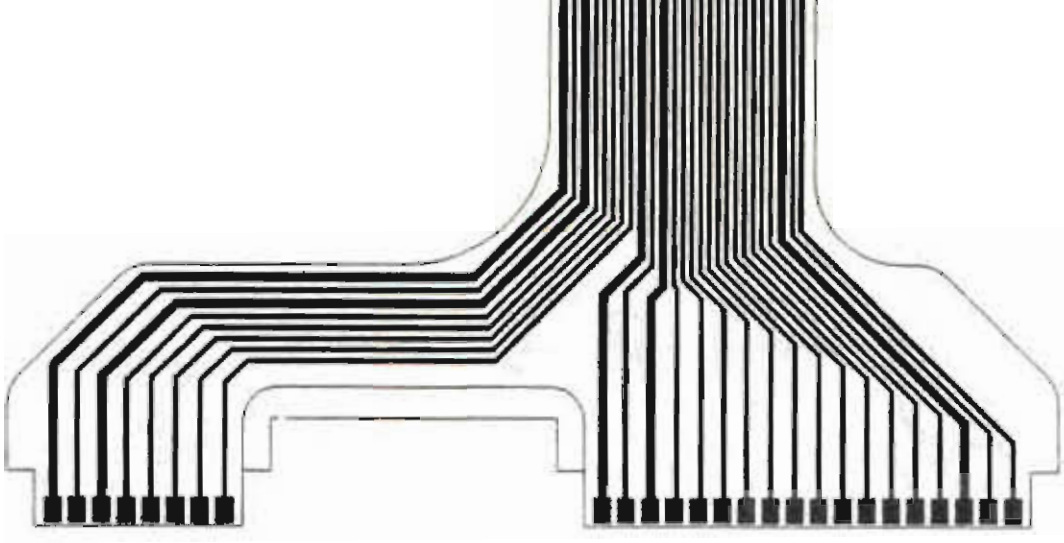

Flexible PCB: (PTT VS DIGITAL)

EXPLODED VIEW

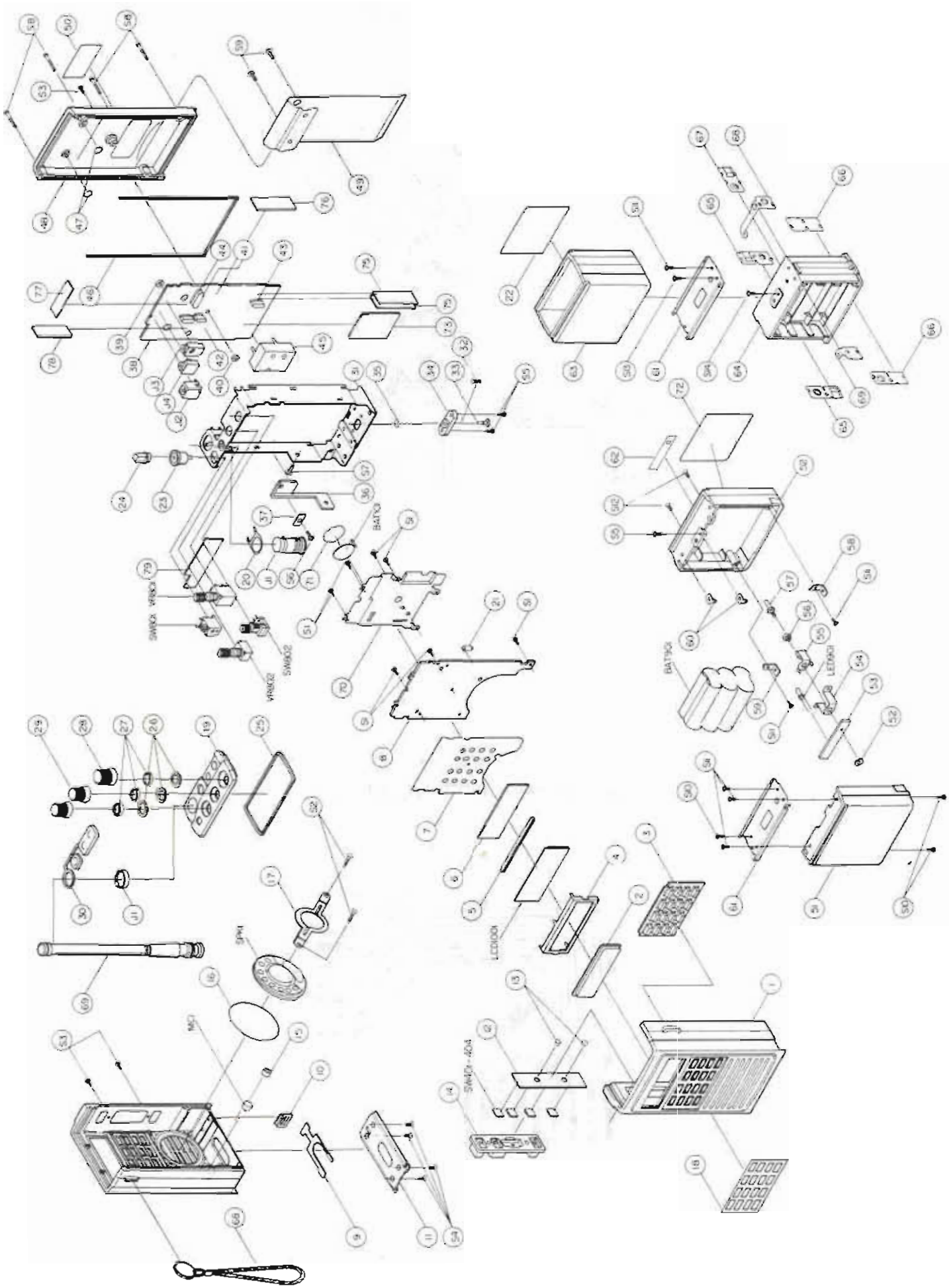

EXPLODED VIEW PARTS LIST

Ref. No.	Description	RS Part No.	MFR's Part No.
1	Cover Upper Lexan141 70022		718-358
2	Lens Acryl, 60 × 17 × 2.6t, Clear		813-765
3	Pad Key, Silicon Rubber, 52.5 × 32 × 6.4, Gray		894-641
4	Holder LCD, SPTE 52.6 × 20.7, White		732-751
5	Zebra, LCD, YS-0.18, 52 × 2.6 × 1.9		422-390-2
6	Plate Illuminator, Acryl, 52 × 17, Clear/White Silk Screen		795-177
7	Sticker, Silver Paper, 70 × 52, Silver		906-335
8	Ass'y, Digital PCB		593-160
9	Stopper, Sus, 41.6 × 18 × t0.8 Natural		752-544
10	Latch, PC, 10.8 × 13 × 3, Black		825-755
11	Plate Guide, Sus, 57 × 24.5 × 0.8t, Natural		771-934
12	Ass'y, PTT PCB		593-166
13	Bushing, BsBM, D4 × 4.4, Sn-Plating, White		852-979
14	Pad PTT, Silicon Rubber, 57 × 14 × 7.7, Gray		894-640
15	Bushing Mic, NBR Rubber, D7 × 5, Black		850-924
16	Filter Speaker, Felt, D36.5 × 0.1t, Black		906-336
17	Holder Speaker, SPC, D24.5 × 48 × 0.8t, Ni-Plating, White		732-702
18	Overlay (KEY), PVC, 51 × 33.5 × 0.5t, Black		795-176
19	Panel Top PC, 60 × 30 × 5.7, Black		702-307
20	Washer Ground, SPTE d14.5 × 0.3t, Natural		660-996
21	Holder Rubber, Silicon, D4 × 9.5, Gray		894-722
22	Label		
23	Packing (RF Power), Silicon Rubber, D10 × 11.5, Gray		894-642
24	Knob-RF Power, ABS D6.6 × 11.4, Black		852-758
25	Packing Jacks, Silicon Rubber, Black		894-643
26	Ring, Silicon Rubber, D10 × 0.8t, Black		894-650
27	Nut Ring, BsBM, D9.5 × 2, Brown		650-330
28	Knob-Channel, ABS D12 × 12, Black		852-757
29	Knob-Volume, ABS D11 × 11, Black		852-756
30	Dust Cap, Neporene Rubber, Black		830-899
31	Frame, SPTE, 96 × 55 × 24, Ni-Plating, White		718-362
32	Spring Coil, Sus, D3.5 × 6, Natural		881-504
33	Pin Contact, BsBM, D4.9 × 10, Ni-Plating, White		860-130
34	Holder Battery Contact, ABS 21 × 8 × 5		732-751
35	"E" Ring, D1.5, Black		655-018
36	Heat Sink, Cu 41 × 12, Sn-Plating, White		761-725
37	Washer, Cu-Plate, 9.8 × 6 × 2.5t, Brown		660-900
38	Ass'y, RF PCB		593-159
39	Bushing, BsBM, D4.7 × 2.6, Sn-Plating, White		852-994

Ref. No.	Description	RS Part No.	MFR's Part No.
40	Bushing, BsBM, D4 × 3, Ni-Plating, White		853-026
41	Rubber Cap, Silicon, 11 × 4.4 × 4.3, Clear		894-785
42	Rubber Cap, Silicon, 7.5 × 2.9 × 8.5, Clear		894-786
43	Rubber Holder, Silicon, 9.6 × 4.2, Clear		894-787
44	Rubber Holder, Silicon, 7 × 2.8, Clear		894-788
45	Shield Can, BsP 30 × 20 × 9, Sn-Plating, White		772-010
46	Gasket, Silicon Rubber, 270mm, Black		891-370
47	Insulator, Felt, D6 × 0.3, Black		906-335
48	Cover Bottom A1, 107 × 63 × 10.4, Black		718-359
49	Belt Hook, Sus 304, Black		721-821
50	Label Name, Polyester, 35 × 18, Black		958-944-A
51	Upper Cover (Battery), PC, 67 × 60 × 18, Black		718-361
52	Bottom Cover (Battery), PC, 67 × 60 × 18 ×, Black		718-370
53	Ass'y, Battery PCB		593-170
54	Bracket, SPC, 20 × 6 × 12, Ni-Plating, White		723-741
55	Spring Flat PBsP 6 × 9 × 11, Ni-Plating, White		881-529
56	Bushing, Acetal, D6 × 2, White		853-025
57	Pin Contact, BsBM, D2 × 15, Ni-Plating, White		860-136
58	Terminal (Input" + "), SPC, 10 × 5 × 7, Ni-Plating, White		752-543
59	Terminal (Input" − "), SPC, 10 × 5 × 7, Ni-Plating, White		752-545
60	Terminal (Output " + ", " − "), SPC, 6 × 5, 5 × 5, Ni-Plating, White		752-583
61	Plate Tension, Sus, 57 × 26, 5 × 2.5, Natural Color		771-935
62	Overlay, PVC, 30.9 × 8.8 × 0.5t, Black		795-414
63	Housing Battery (Dry), PC, 65 × 52 × 25, Black		718-360
64	Holder Battery (Dry), PC, 61 × 5 × 29, Black		732-753
65	Terminal "A", Sus, 27 × 11.5, Natural		752-547
66	Terminal "B", Sus, 27 × 11.5, Natural		752-546
67	Terminal "C", Sus, 24.5 × 13, Natural		752-548
68	Terminal " + ", Sus, 27 × 13 × 11.5, Natural		752-549
69	Terminal " − ", Sus, 12.7 × 11.5 Natural		752-550
70	Shield Plate, CNP3, 66 × 54 × 0.15t, White		772-009
71	Insulation Plate, Mylar, D16 × 0.3t, Clear		906-233
72	Label		
73	Ass'y, VCO PCB		593-168
74	Ass'y, MIC PCB		593-164
75	Ass'y Level PCB		593-162
76	Ass'y, High Pass Filter PCB		593-163
77	Ass'y, Audio PCB		593-161

Ref. No.	Description	RS Part No.	MFR's Part No.
78	Ass'y, Auto Power Control PCB		593-165
79	Ass'y, Top PCB		593-167
80	Insulator Clear		906-360
81	Bushing Rubber Sponge, D14.5 × 1t, Black		894-545
82	Strap Carrying With Ring, 200mm, Black		906-337
83	Nut, BsBM, M2, Hexagon, Brown		651-015
84	Antenna Rod, Flexible, Black		420-402-3
S1	Screw Tapping (PH), D1.8 × 4-2S, Ni-Plating, White		628-094
S2	Screw Tapping (PH), D2.6 × 6, Ni-Plating White		621-026
S3	Screw Machine (PH), M2 × 5, Black		612-285
S4	Screw Machine (FH), M2.6 × 7, Ni-Plating, White		611-310
S5	Screw Machine (RH), M2 × 4, Ni-Plating, White		612-286
S6	Screw Machine, M2.6 × 8, Ni-Plating White		661-077
S7	Screw Machine (PH), M2, 6 × 5, Ni-Plating, White		611-032
S8	Screw Tapping (PH), D2 × 17, Black		622-205
S9	Screw Machine (BH), M3 × 4, Black		613-536
S10	Screw Machine (PH), M2 × 4, Ni-Plating, White		612-018
S11	Screw Tapping (PH), D2 × 4-2S, Ni-Plating, White		622-204
S12	Screw machine (FH), M2 × 5, Black		612-230
S13	Screw Taptite (PH), D2 × 4, Ni-Plating, White		600-724
S14	Screw Taptite(RH), D2 × 5, Ni-Plating, white		632-002
J1	Connector, Ant., BNC-RB (M3), SW1850		421-651-3
J2	DC Power Ext., MOJ-D15		420-709-5
J3	Miniature, Speaker, HSJ0836-01-50		420-706-2
J4	Miniature, Mike, HSJ1102-01-510		420-709-6
SW801	Push Lock, SPPJ422BP011, RF Power Sw		432-027-8
SW802	Rotary, EC09P20-04, Channel Sw		430-063-0
VR801	Variable, 20KA, Audio Volume/Switch		450-523-5
VR802	Variable, 20KB, Squelch Volume		450-524-6
SPK1	Speaker, 8 ohm, 0.5W, 40mm		420-164-5
MC1	Mike, Condensor WH-063T, 6DIA		420-206-0
SW401	Switch, Tact, Chip, SKHUPF 7.2 × 8.5		436-030-0
SW402	Switch, Tact, Chip, SKHUPF 7.2 × 8.5		436-030-0
SW403	Switch, Tact, Chip, SKHUPF 7.2 × 8.5		436-030-0
SW404	Switch, Tact, Chip, SKHUPF 7.2 × 8.5		436-030-0
LCD1001	LCD, LE-0802A, Display		252-092-0
LCD901	LED Lamp, KRA124, Red		251-007-9
BAT1001	Battery, Lithium, 3V, 3.8 × 15mm		420-564-3
BAT901	Battery, Ni-Cad, 7.2V 600mAh, 6VEAA		420-567-6

Ref. No.	Description	RS Part No.	MFR. Part No.
	Ass'y, RF PCB		
	Capacitors		
C1	Ceramic, Chip, 15pF 50V, 0805, ±5%		131-511-0
C2	Ceramic, Chip, 0.1μF 25V, 0805, +80%−20%		130-185-5
C3	Ceramic, Chip, 22pF 50V, 0805, ±5%		132-223-5
C4	Ceramic, Chip, 220pF 50V, 0805, ±5%		132-220-2
C5	Elect, 10μF 16V, 4DIAX7, ±20%		101-043-5
C6	Ceramic, Chip, 39pF 50V, 0805, ±5%		133-911-8
C7	Ceramic, Chip, 22pF 50V, 0805, ±5%		132-223-5
C8	Ceramic, Chip, 56pF 50V, 0805, ±5%		135-613-9
C9	Ceramic, Chip, 220pF 50V, 0805, ±5%		132-220-2
C10	Elect, 10μF 16V,4DIAX7, ±20%		101-043-5
C11	Ceramic, Chip, 15pF 50V, 0805, ±5%		131-511-0
C12	Ceramic, Chip, 0.1μF 25V, 0805, +80%−20%		130-185-5
C13	Ceramic, Chip, 220pF 50V, 0805, ±5%		132-220-2
C14	Elect, 10μF 16V, 4DIAX7, ±20%		101-043-5
C15	Ceramic, Chip, 0.001μF 50V, 0805, ±10%		130-184-4
C16	Ceramic, Chip, 5pF 50V, 0805, ±0.25pF		135-010-4
C17	Ceramic, Chip, 56pF 50V, 0805, ±5%		135-613-9
C18	Ceramic, Chip, 0.1μF 25V, 0805, +80%−20%		130-185-5
C19	Ceramic, Chip, 47pF 50V, 0805, ±5%		134-721-8
C20	Ceramic, Chip, 4pF 50V, 0805, ±0.25pF		134-007-7
C21	Ceramic, Chip, 0.001μF 50V, 0805, ±10%		130-184-4
C22	Ceramic, Chip, 56pF 50V, 0805, ±5%		135-613-9
C23	Ceramic, Chip, 33pF 50V, 0805, ±5%		133-314-9
C24	Ceramic, Chip, 0.01μF 50V, 0805, ±5%		130-172-2
C25	Tantalum, Chip, 10μF 10V, B, ±20%		141-046-0
C26	Elect, 220μF 10V, 6.3DIAX7, ±20%		102-288-5
C27	Ceramic, Chip, 0.01μF 50V, 0805, ±10%		130-172-2
C28	Ceramic, Chip, 15pF 50V, 0805, ±5%		131-511-0
C29	Ceramic, Chip, 1pF 50V, 0805, ±0.25pF		131-030-2
C30	Ceramic, Chip, 12pF 50V, 0805, ±5%		131-208-7
C31	Ceramic, Chip, 0.001μF 50V, 0805, ±10%		130-184-4
C32	Ceramic, Chip, 0.001μF 50V, 0805, ±10%		130-184-4
C33	Ceramic, Chip, 15pF 50V, 0805, ±5%		131-511-0
C34	Ceramic, Chip, 1.5pF 50V, 0805, ±0.25pF		131-559-4
C35	Ceramic, Chip, 20pF 50V, 0805, ±5%		132-012-1
C36	Ceramic, Chip, 15pF 50V, 0805, ±5%		131-511-0
C37	Ceramic, Chip, 75pF 50V, 0805, ±5%		137-504-4

Ref. No.	Description	RS Part No.	MFR. Part No.
C38	Elect, 100μF 16V, 6.3DIAX7, ±20%		101-093-0
C39	Ceramic, Chip, 22pF 50V, 0805, ±5%		132-223-5
C40	Ceramic, Chip, 0.001μF 50V, 0805, ±10%		130-184-4
C41	Ceramic, Chip, 0.001μF 50V, 0805, ±5%		130-184-4
C42	Ceramic, Chip, 15pF 50V, 0805, ±5%		131-511-0
C43	Ceramic, Chip, 1.5pF 50V, 0805, ±0.25pF		131-559-4
C44	Ceramic, Chip, 33pF 50V, 0805, ±5%		133-314-9
C45	Ceramic, Chip, 33pF 50V, 0805, ±5%		133-314-9
C46	Ceramic, Chip, 0.001μF 50V, 0805, ±10%		130-184-4
C47	Tantalum, Chip, 10μF 10V, B, ±20%		141-046-0
C48	Ceramic, Chip, 5pF 50V, 0805, ±0.25pF		135-010-4
C49	Tantalum, Chip, 10μF 10V, B, 20%		141-046-0
C50	Ceramic, Chip, 0.1μF 25V, 0805, +80% −20%		130-185-5
C51	Ceramic, Chip, 0.01μF 50V, 0805, ±10%		130-172-2
C52	Ceramic, Chip, 0.01μF 50V, 0805, ±10%		130-172-2
C53	Ceramic, Chip, 220pF 50V, 0805, ±5%		132-220-2
C54	Ceramic, Chip, 220pF, 220pF 50V, 0805, ±5%		132-220-2
C55	Ceramic, Chip, 0.1μF 25V, 0805, +80%-20%		130-185-5
C56	Ceramic, Chip, 0.001μF 50V, 0805, ±10%		130-184-4
C57	Ceramic, Chip, 0.1μF 50V, 1206, ±10%		130-197-5
C58	Ceramic, Chip, 0.001μF 50V, 0805, ±10%		130-184-4
C59	Ceramic, Chip, 220pF 50V, 0805, ±5%		132-220-2
C60	Ceramic, Chip, 0.0033μF 50V, 0805, ±10%		130-315-6
C61	Ceramic, Chip, 0.1μF 25V, 0805, +80% −20%		130-185-5
C62	Ceramic, Chip, 39pF 50V, 0805, ±5%		133-911-8
C63	Ceramic, Chip, 68pF, 0805, ±5%		136-816-5
C64	Ceramic, Chip, 0.1μF 25V, 0805, +80% −20%		130-185-5
C65	Ceramic, Chip, 0.01μF 50V, 0805, ±10%		130-172-2
C66	Ceramic, Chip, 0.1μF 25V, 0805,+80% −20%		130-185-5
C67	Ceramic, Chip, 0.1μF 25V, 0805, +80% −20%		130-185-5
C68	Tantalum, Chip, 10μF 10V, B, ±20%		141-046-0
C69	Tantalum, Chip, 1μF 16V, A, ±20%		141-036-1
C70	Ceramic, Chip, 0.1μF 25V, 0805, +80% −20%		130-185-5
C71	Tantalum, Chip, 10μF 10V, B, ±20%		141-046-0
C72	Elect, 100μF 16V, 6.3DIAX7, ±20%		101-093-0
C73	Ceramic, Chip, 0.1μF 25V, 0805, +80% −205		130-185-5
C74	Tantalum, Chip, 1μF 16V, A, ±20%		141-036-1
C75	Ceramic, Chip, 0.1μF 25V, 0805, +80% −20%		130-185-5
C76	Ceramic, Chip, 56pF 50V, 0805, ±5%		135-613-9

Ref. No.	Description	RS Part No.	MFR. Part No.
C77	Ceramic, Chip, 51pF 50V, 0805, ±5%		135-103-5
C78	Ceramic, Chip, 0.1μF 25V, 0805, +80%−20%		130-185-5
C79	Ceramic, Chip, 0.01μF 50V, 0805, ±10%		130-172-2
C80	Tantalum, Chip, 1μF 16V, A, ±20%		141-036-1
C81	Ceramic, Chip, 0.1μF 25V, 0805, +80%−20%		130-185-5
C82	Ceramic, Chip, 0.1μF 25V, 0805, +80%−20%		130-185-5
C83	Elect, 100μF 16V, 6.3DIAX7, ±20%		101-093-0
TC1	Trimmer, 20pF (ECR-LA020E52V),+50%−0%		172-019-0
	CONNECTORS		
CON1	Lead/Housing Ass'y, 4P, 50mm		504-808
CON2	Lead/Housing Ass'y, 6P, 50mm		504-809
	COILS		
L1	Inductor, Chip, 1μH, 01, ±20%		310-657-0
L2	Inductor, Chip, 1μH, 01, ±20%		310-657-0
L3	Choke, MK-4, 2×0.4×8t:L		310-092-9
L4	Inductor, Axial, 2.2μH, 02, ±20%		310-378-7
L5	Resistor-Choke, 1Kohm×10t		310-213-7
L6	Spring, 3×0.65×1.5t:L		310-224-2
L7	Inductor, Axial, 1μH, 02, ±20%		310-298-4
L8	Resistor-Choke, 1Kohm×10t		310-218-7
L9	Spring, 3×0.65×1.5t:L		310-224-2
L10	Spring, 2×0.4×4.5t:L		310-573-7
L11	Spring, 2×0.4×5.5t:L		310-574-8
L12	Choke,MK-4, 12×0.4×8t:L		310-092-9
L13	Inductor, Chip, 1μH, 01, ±20%		310-657-0
L14	Inductor, Axial, 100μH, 04, ±10%		310-221-9
L15	Not Used.		
L16	Inductor, Chip, 10μH, 01, ±10%		310-659-2
FB1	Bead Core, FC3×2		320-253-1
FB2	Bead Core, FC3×2		320-253-1
FB3	Bead Core, FC3×2		320-253-1
T1	Transformer, Rx Molded, 140MHz 5.5t		310-571-5
T2	Transformer, Rx Molded, 140MHz 5.5t		310-571-5
T3	Transformer, Rx Molded, 140MHz 5.5t		310-571-5
T4	Transformer, Rx Molded, 140MHz 5.5t		310-571-5
T5	Transformer, Rx Mixer, 21.4MHz		320-597-2
T6	Transformer, Rx Molded, 130MHz 6.5t		310-572-6
T7	Transformer, Rx Molded, 130MHz 6.5t		310-572-6
T8	Transformer, Detector 455KHz		320-232-2

Ref. No.	Description	RS Part No.	MFR. Part No.
	CRYSTALS		
X1	12.8MHz, 5PPM, Nr-2B		262-256-5
X2	21.855MHz, 30PPM, HC39/T		262-213-6
	DIODES		
D1	MMBV3401(4D), SOT-23, Pin		243-012-0
D2	1SS97, Axial, Schottky Detector		243-026-3
D3	MMBV3401(4D), SOT-23, Pin		243-012-0
D4	IN5819, Axial, Rectifier		245-024-1
D5	IN5819, Axial, Rectifier		245-024-1
D6	MMBV3401(4D), SOT-23Pin		243-012-0
	FILTERS		
CF1	Ceramic, CFW455F, 455KHz		270-027-8
XF1	Crystal, 21M15BU, 21.4MHz		271-002-0
	IC'S		
IC1	MC145170DR2, SO-16, PLL		223-422-1
IC2	MC14094BD, SO-16, SHIFT-RESISTOR		223-233-7
IC3	LM2931AZ, TO-226AA, 5V REGULATOR		231-024-9
IC4	MC3371DR2, SO-16, FM IF		223-421-0
	JACKS		
J2	DC Power, Ext., MOJ-D15		420-709-5
J3	Miniature, Speaker, HSJ0836-01-50		420-706-2
J4	Miniature, Mike, HSJ1102-01-510		420-709-6
	RESISTORS CARBON		
R1	Chip, 10K ohm, 1/10W, 0805, ±5%		060-103-8
R2	Chip, 10K ohm, 1/10W, 0805, ±5%		060-103-8
R3	Chip, 10K ohm, 1/10W, 0805, ±5%		060-103-8
R4	Chip, 470 ohm, 1/10W, 0805, ±5%		060-471-0
R5	Chip, 470 ohm, 1/10W, 0805, ±5%		060-471-0
R6	Chip, 2.2Kohm, 1/10W, 0805, ±5%		060-222-2
R7	Chip, 10K ohm, 1/10W, 0805, ±5%		060-103-8
R8	Chip, 10 ohm, 1/10W, 0805, ±5%		060-100-5
R9	Chip, 100 ohm, 1/10W, 0805, ±5%		060-101-6
R10	Chip, 22 ohm, 1/10W, 0805, ±5%		060-229-9
R11	Chip, 100 ohm, 1/10W, 0805, ±5%		060-101-6
R12	Chip, 1K ohm, 1/10W, 0805, ±5%		060-102-7
R13	Chip, 1K ohm, 1/10W, 0805, ±5%		060-102-7
R14	Chip, 330 ohm, 1/10W, 0805, ±5%		060-331-7
R15	Chip, 3.3K ohm, 1/10W, 0805, ±5%		060-332-8
R16	Chip, 10 ohm, 1/10W, 0805, ±5%		060-100-5

Ref. No.	Description	RS Part No.	MFR. Part No.
R17	Chip, 330 ohm, 1/10W, 0805, ±5%		060-331-7
R18	Chip, 4.7K ohm, 1/10W, 0805, ±5%		060-472-1
R19	Chip, 47K ohm, 1/10W, 0805, ±5%		060-473-2
R20	Chip, 470 ohm, 1/10W, 0805, ±5%		060-471-0
R21	Chip, 2.2K ohm, 1/10W, 0805, ±5%		060-222-2
R22	Chip, 10 ohm, 1/10W, 0805, ±5%		060-100-5
R23	Chip, 1.2K ohm, 1/10W, 0805, ±5%		060-122-5
R24	Chip, 3.3K ohm, 1/10W, 0805, ±5%		060-332-8
R25	Chip, 820 ohm, 1/10W, 0805, ±5%		060-821-3
R26	Chip, 47K ohm, 1/10W, 0805, ±5%		060-473-2
R27	Chip, 470K ohm, 1/10W, 0805, ±5%		060-474-3
R28	Chip, 22K ohm, 1/10W, 0805, ±5%		060-223-3
R29	Chip, 470K ohm, 1/10W, 0805, ±5%		060-474-3
R30	Chip, 10K ohm, 1/10W, 0805, ±5%		060-103-8
R31	Chip, 82K ohm, 1/10W, 0805, ±5%		060-823-5
R32	Chip, 39K ohm, 1/10W, 0805, ±5%		060-393-3
R33	Chip, 33k ohm, 1/10W, 0805, ±5%		060-333-9
R34	Chip, 100K ohm, 1/10W, 0805, ±5%		060-104-9
R35	Chip, 270K ohm, 1/10W, 0805, ±5%		060-274-9
R36	Chip, 330K ohm, 1/10W, 0805, ±5%		060-334-0
R37	Chip, 100K ohm, 1/10W, 0805, ±5%		060-104-9
R38	Chip, 3.3K ohm, 1/10W, 0805, ±5%		060-332-6
R39	Chip, 47K ohm, 1/10W, 0805, ±5%		060-473-2
R40	Chip, 10 ohm, 1/10W, 0805, ±5%		060-100-5
R41	Chip, 1K ohm, 1/10W, 0805, ±5%		060-102-7
R42	Chip, 10K ohm, 1/10W, 0805, ±5%		060-103-8
R43	Chip, 1M ohm, 1/10W, 0805, ±5%		060-105-0
R44	Chip, 1M ohm, 1/10W, 0805, ±5%		060-105-0
R45	Chip, 10K ohm, 1/10W, 0805, ±5%		060-103-8
R46	Chip, 2.2K ohm, 1/10W, 0805, ±5%		060-222-2
R47	Chip, 15K ohm, 1/10W, 0805, ±5%		060-153-3
R48	Chip, 1.2K ohm, 1/10W, 0805, ±5%		060-122-5
R49	Chip, 4.7K ohm, 1/10W, 0805, ±5%		060-472-1
R50	Chip, 1.2K ohm, 1/10W, 0805, ±5%		060-122-5
R51	Chip, 1.2K ohm, 1/10W, 0805, ±5%		060-122-5
R52	Chip, 470K ohm, 1/10W, 0805, ±5%		060-474-3
R53	Not used		060-474-3
R54	Chip, 100 ohm, 1/10W, 0805, ±5%		060-101-6
R55	Chip, 1K ohm, 1/10W, 0805, ±5%		060-102-7
RV1	Resistor-Semifixed, 22Kb, 6Dia		071-223-1

Ref. No.	Description	RS Part No.	MFR. Part No.
RV2	Resistor-Semifixed, 22Kb, 6Dia		071-223-1
	TRANSISTORS/FET'S		
Q1	KRA110S(PK), SOT-23, PNP		202-092-5
Q2	MMBC1321(Q4), SOT-23, NPN		203-096-4
Q3	MRF581, 317-01(MACR-X), NPN		203-055-7
Q4	SRFH1900, TO-220Ab, NPN		203-043-6
Q5	KRC110S(NK), Sot-23, NPN		202-096-9
Q6	KRA110S(PK), Sot-23, PNP		202-092-5
Q7	KRA110S(PK), Sot-23, PNP		202-092-5
Q8	BF999(LB), Sot-23, N-MOSFET		213-001-3
Q9	BF999(LB), Sot-23, N-MOSFET		213-001-1
Q10	BF513(59), Sot-23, N-JFET		200-024-4
Q11	KRC110S(NK), Sot-23, NPN		202-096-9
Q12	MMBC1321(Q4), Sot-23, NPN		203-096-4
Q13	KTA1504S(ASG), Sot, 23, NPN		202-082-6
Q14	KTC3875S(ALG), Sot-23, NPN		202-083-7
Q15	KTA1504S(ASG), Sot-23, NPN		202-082-6
	End of Ass'y-RF PCB		
	Ass'y, Digital PCB		
	Capacitors		
C1001	Ceramic, Chip, 0.1μF 25V, 0805, +80% −20%		130-185-5
C1002	Tantalum, Chip, 1μF 16V, A, ±20%		141-036-1
C1003	Tantalum, Chip, 10μF 10V, B, ±20%		141-046-0
C1004	Ceramic, Chip, 470pF 50V, 0805, ±5%		134-761-4
C1005	Tantalum, Chip, 0.22μF 35V, A, ±20%		140-204-1
C1006	Not Used.		
C1007	Ceramic, Chip, 0.022μF 50V, 0805, ±5%		130-234-5
C1008	Ceramic, Chip, 0.001μF 50V, 0805, ±10%		130-184-4
C1009	Tantalum, Chip, 10μF 10V, B, ±20%		141-046-0
C1010	Tantalum, Chip, 10μF 10V, B, ±20%		141-046-0
C1011	Ceramic, Chip, 0.1μF 25V, 0805, +80% −20%		130-185-5
C1012	Ceramic, Chip, 0.1μF 25V, 0805, +80% −20%		130-185-5
C1013	Not Used.		
C1014	Ceramic, Chip, 47pF 50V, 0805, ±5%		134-721-8
C1015	Ceramic, Chip, 47pF 50V, 0805, ±5%		134-721-8
C1016	Ceramic, Chip, 20pF 50V, 0805, ±5%		130-012-2
C1017	Ceramic, Chip, 0.01μF 50V, 0805, ±10%		130-172-2
C1018	Ceramic, Chip, 20pF 50V, 0805, ±5%		130-012-1
C1019	Ceramic, Chip, 0.01μF 50V, 0805, ±10%		130-172-2

Ref. No.	Description	RS Part No.	MFR. Part No.
C1020	Ceramic, Chip, 0.01μF 50V, 0805, ±10%		130-172-2
C1021	Ceramic, Chip, 0.01μF 50V, 0805, ±10%		130-172-2
C1022	Tantalum, Chip, 10μF 10V, B, ±20%		141-046-0
C1023	Ceramic, Chip, 0.1μF 25V, 0805, +80% −20%		130-185-5
C1024	Ceramic, Chip, 0.1μF 25V, 0805, +80% −20%		130-185-5
C1025	Ceramic, Chip, 0.1μF 50V, 0805, +80% −20%		130-185-5
C1026	Tantalum, Chip, 10μF 10V, B, ±20%		141-046-0
	Connectors		
CON1001	Waffer, 8283-0312, 3pin, 2mm		422-275-2
	Film, flexible, 65.25×59.2×0.25		416-933-B
	Film, Flexible, 27×21.5×0.25		416-942-A
X1001	Crystal, 3.579545MHz, 50PPM, TC-38A		262-253-2
	Diodes		
D1001	KDS193S(F3), Sot-23, Switching		234-052-6
D1002	RB471E, FMD(DUAL), Schottky Rectifier		249-043-8
D1003	KDS193S(F3), Sot-23, Switching.		234-052-6
D1004	RB471E, FMD(DUAL), Schottky Rectifier		249-043-8
D1005	RB471E, FMD(DUAL), Schottky Rectifier		249-043-8
D1006	KDS193S(F3), Sot-23, Switching		234-052-6
D1007	RB471E, FMD(DUAL), Schottky Rectifier		249-043-8
D1008	RB471E, FMD(DUAL), Schottky Rectifier		249-043-8
	IC'S		
IC1001	LM2931AZ, TO-226AA, 5V Regulator		231-024-9
IC1002	MF6CWM-100, SO-16L, Switched Capacitor		231-073-3
IC1003	MC142100DW, SO-16L, Crosspoint Switch		223-378-5
IC1004	TP5088, SO-16L, DTMF Generator		231-069-9
IC1005	S8054ALR-LN, SOT-89, Voltage Detector		229-446-3
IC1006	HD 404808FS, FP-808, CPU, MASK ROM		227-033-3
IC1007	MC14536DW, SO-16L, DTMF Receiver		223-419-9
IC1008	MC74HC4078D, SO-14, 8-Input Nor-/Or Gate		223-420-9
LCD1001	LCD, LE-0802A, Display		252-092-0
LED1001	LED Lamp, SLP-378H, Backlight Green		251-184-5
LED1002	LED Lamp, SLP-378H, Backlight Green		251-184-5
	Resistors, Carbon		
R1001	Chip, 1K ohm, 1/10W, 0805, ±5%		060-102-7
R1002	Chip, 1K ohm, 1/10W, 0805, ±5%		060-102-7
R1003	Chip, 47K ohm, 1/10W, 0805, ±5%		060-473-2
R1004	Chip, 47K ohm, 1/10W, 0805, ±5%		060-473-2
R1005	Chip, 10K ohm, 1/10W, 0805, ±5%		060-103-8

Ref. No.	Description	RS Part No.	MFR. Part No.
R1006	Chip, 220K ohm, 1/10W, 0805, ±5%		060-224-4
R1007	Chip, 10K ohm, 1/10W, 0805, ±5%		060-103-8
R1008	Chip, 220K ohm, 1/10W, 0805, ±5%		060-224-4
R1009	Chip, 10K ohm, 1/10W, 0805, ±5%		060-103-8
R1010	Chip, 15K ohm, 1/10W, 0805, ±5%		060-153-3
R1011	Chip, 47K ohm, 1/10W, 0805, ±5%		060-473-2
R1012	Chip, 33 ohm, 1/10W, 0805, ±5%		060-330-6
R1013	Chip, 100K ohm, 1/10W, 0805, ±5%		060-104-9
R1014	Chip, 100K ohm, 1/10W, 0805, ±5%		060-104-9
R1015	Chip, 10K ohm, 1/10W, 0805, ±5%		060-103-8
R1016	Chip, 1M ohm, 1/10W, 0805, ±5%		060-105-0
R1017	Chip, 47K ohm, 1/10W, 0805, ±5%		060-473-2
R1018	Chip, 1K ohm, 1/10W, 0805, ±5%		060-102-7
R1019	Chip, 1K ohm, 1/10W, 0805, ±5%		060-102-7
R1020	Chip, 1K ohm, 1/10W, 0805, ±5%		060-102-7
R1021	Chip, 1K ohm, 1/10W, 0805, ±5%		060-102-7
R1022	Chip, 1K ohm, 1/10W, 0805, ±5%		060-102-7
R1023	Chip, 1K ohm, 1/10W, 0805, ±5%		060-102-7
R1024	Chip, 1K ohm, 1/10W, 0805, ±5%		060-102-7
R1025	Chip, 1K ohm, 1/10W, 0805, ±5%		060-102-7
R1026	Chip, 1K ohm, 1/10W, 0805, ±5%		060-102-7
R1027	Chip, 1K ohm, 1/10W, 0805, ±5%		060-102-7
R1028	Chip, 39K ohm, 1/10W, 0805, ±5%		060-393-3
R1029	Chip, 20K ohm, 1/10W, 0805, ±5%		060-203-5
R1030	Chip, 10K ohm, 1/10W, 0805, ±5%		060-103-8
R1031	Chip, 47K ohm, 1/10W, 0805, ±5%		060-473-2
R1032	Chip, 47K ohm, 1/10W, 0805, ±5%		060-473-2
R1033	Chip, 47K ohm, 1/10W, 0805, ±5%		060-473-2
R1034	Chip, 47K ohm, 1/10W, 0805, ±5%		060-473-2
R1035	Chip, 47K ohm, 1/10W, 0805, ±5%		060-473-2
R1036	Chip, 47K ohm, 1/10W, 0805, ±5%		060-473-2
R1037	Chip, 47K ohm, 1/10W, 0835, ±5%		060-473-2
R1038	Chip, 1K ohm, 1/10W, 0805, ±5%		060-102-7
R1039	Chip, 1K ohm, 1/10W, 0805, ±5%		060-102-7
RV1001	Resistor-Semifixed Chip, 1KB ohm, 4mm		067-102-2
RV1002	Resistor-Semifixed Chip, 47KB ohm, 4mm		067-473-7
	Transistors		
Q1001	KRA110S(PK), Sot-23, PNP		200-092-5
Q1002	KTC3875S(ALG), Sot-23, NPN		202-083-7

Ref. No.	Description	RS Part No.	MFR. Part No.
Q1003	KTN222S(ZB), Sot-23, NPN		202-158-2
Q1004	KRA110S(PK), Sot-23, PNP		200-092-5
Q1005	KRA110S(PK), Sot-23, PNP		200-092-5
	End of Ass'y-Digital PCB		
	Ass'y, Audio PCB		
	Resistors, Carbon		
R601	Chip, 470K ohm, 1/10W, 0805, ±5%		060-474-3
R602	Chip, 470K ohm, 1/10W, 0805, ±5%		060-474-3
R603	Chip, 100 ohm, 1/10W, 0805, ±5%		060-101-6
R604	Chip, 22K ohm, 1/10W, 0805, ±5%		060-223-3
R605	Chip, 1K ohm, 1/10W, 0805, ±5%		060-102-7
R606	Chip, 47K ohm, 1/10W, 0805, ±5%		060-473-2
R607	Chip, 10K ohm, 1/10W, 0805, ±5%		060-103-8
	Capacitors		
C601	Ceramic, Chip, 0.047μF 50V, 0805, ±10%		130-417-4
C602	Tantalum, Chip, 10μF 10V, B, ±20%		141-046-1
C603	Tantalum, Chip, 1μF 16V, A, ±20%		141-036-1
C604	Ceramic, Chip, 0.1μF 25V, 0805, +80%−20%		130-185-5
C605	Ceramic, Chip, 0.001μF 50V, 0805, ±10%		130-184-4
C606	Ceramic, Chip, 0.001μF 50V, 0805, ±10%		130-184-4
C607	Tantalum, Chip, 0.68μF 16V, A, ±20%		140-606-1
	Transistors		
Q601	KTA1504S(ASG), Sot-23, PNP		202-082-6
Q602	KRC104S(ND), Sot-23, NPN		202-095-8
Q603	KRC104S(ND), Sot-23, NPN		202-095-8
CON601	Connector Pin, Angle, 7Pin, 2mm Pitch		422-374-8
IC601	IC, LM386-N3, Dip-8, Audio Amp.		231-008-4
	End of Ass'y-Audio PCB		
	Ass'y, Level PCB		
	Capacitors		
C301	Ceramic, Chip, 0.001μF 50V, 0805, ±10%		130-184-4
C302	Ceramic, Chip, 0.01μF 50V, 0805, ±5%		130-198-6
C303	Ceramic, Chip, 0.001μF 50V, 0805, ±10%		130-184-4
C304	Ceramic, Chip, 0.1μF 25V, 0805, +80%−20%		130-185-5
C305	Ceramic, Chip, 0.1μF 25V, 0805, +80%−20%		130-185-5
C306	Tantalum, Chip, 1μF 16V, A, ±20%		141-036-1
	Resistors Carbon		
R301	Chip, 39K ohm, 1/10W, 0805, ±5%		060-393-3

Ref. No.	Description	RS Part No.	MFR. Part No.
R302	Chip, 39K ohm, 1/10W, 0805, ±5%		060-393-3
R303	Chip, 39K ohm, 1/10W, 0805, ±5%		060-393-3
R304	Chip, 39K ohm, 1/10W, 0805, ±5%		060-393-3
R305	Chip, 100K ohm, 1/10W, 0805, ±5%		060-104-9
R306	Chip, 82K ohm, 1/10W, 0805, ±5%		060-823-5
R307	Chip, 27K ohm, 1/10W, 0805, ±5%		060-273-8
R308	Chip, 56K ohm, 1/10W, 0805, ±5%		060-563-0
R309	Chip, 1M ohm, 1/10W, 0805, ±5%		060-105-0
R310	Chip, 12K ohm, 1/10W, 0805, ±5%		060-123-6
R311	Chip, 22K ohm, 1/10W, 0805, ±5%		060-223-3
R312	Chip, 2.2K ohm, 1/10W, 0805, ±5%		060-222-2
R313	Chip, 39K ohm, 1/10W, 0805, ±5%		060-393-3
CON301	Connector Pin, Angle, 10Pin, 2mm Pitch		422-373-7
IC301	IC, LM339M, So-14, Quad Comparator		228-029-5
Q301	Transistor, KRC110S(ND), NPN		202-095-8
	End of Ass'y-Level PCB		
	Ass'y, High Pass Filter PCB		
	Capacitors		
C501	Ceramic, Chip, 0.047μF 25V, 0805 ±5%		130-425-1
C502	Ceramic, Chip, 0.047μF 25V, 0805, ±5%		130-425-1
C503	Ceramic, Chip, 0.047μF 25V, 0805, ±5%		130-425-1
C504	Ceramic, Chip, 0.047μF 25V, 0805, ±5%		130-425-1
C505	Ceramic, Chip, 0.047μF 25V, 0805, ±5%		130-425-1
C506	Ceramic, Chip, 0.047μF 25V, 0805, ±5%		130-425-1
C507	Ceramic, Chip, 0.047μF 25V, 0805, ±5%		130-425-1
C508	Ceramic, Chip, 0.047μF 25V, 0805, ±5%		130-425-1
C509	Ceramic, Chip, 0.01μF 50V, 0805, ±10%		130-172-2
	Resistors Carbon		
R501	Chip, 2.7K ohm, 1/10W, 0805, ±5%		060-272-7
R502	Chip, 4.7K ohm, 1/10W, 0805, ±5%		060-472-1
R503	Chip, 2.2K ohm, 1/10W, 0805, ±5%		060-222-2
R504	Chip, 22K ohm, 1/10W, 0805, ±5%		060-223-3
R505	Chip, 3.3K ohm, 1/10W, 0805, ±5%		060-332-8
R506	Chip, 1.5K ohm, 1/10W, 0805, ±5%		060-152-2
R507	Chip, 56K ohm, 1/10W, 0805, ±5%		060-563-0
R508	Chip, 12K ohm, 1/10W, 0805, ±5%		060-123-6
R509	Chip, 180K ohm, 1/10W, 0805, ±5%		060-184-1
R510	Chip, 15K ohm, 1/10W, 0805, ±5%		060-153-3

Ref. No.	Description	RS Part No.	MFR. Part No.
R511	Chip, 680 ohm, 1/10W, 0805, ±5%		060-681-3
R512	Chip, 10K ohm, 1/10W, 0805, ±5%		060-103-8
R513	Chip, 10K ohm, 1/10W, 0805, ±5%		060-103-8
CON501	Connector Pin, Angle, 6Pin, 2mm Pitch		422-371-5
IC501	IC, LM2902M, So-14, Quad Op Amp		231-082-0
	End of Ass'y-High Pass Filter PCB		
	Ass'y, Mic PCB		
	Capacitors		
C101	Ceramic, Chip, 0.0018μF 50V, 0805, ±10%		130-A22-0
C102	Ceramic, Chip, 0.022μF 50V, 0805, ±10%		130-234-5
C103	Ceramic, Chip, 0.0038μF 50V, 0805, ±10%		130-329-8
C104	Ceramic, Chip, 0.0056μF 50V, 0805, ±10%		130-513-7
C105	Ceramic, Chip, 0.1μF 25V, 0805, +80% −20%		130-185-5
C106	Ceramic, Chip, 0.01μF 50V, 0805, ±10%		130-172-2
C107	Ceramic, Chip, 0.1μF 25V, 0805, +80% −20%		130-185-5
C108	Chramic, Chip, 56pF 50V, 0805, ±5%		135-613-9
C109	Ceramic, Chip, 0.022μF 50V, 0805, ±10%		130-234-5
C110	Ceramic, Chip, 56pF 50V, 50V, 0805, ±5%		135-613-9
C111	Ceramic, Chip, 0.1μF 25V, 0805, +80% −20%		130-185-5
C112	Tantalum, Chip, 10μF 10V, B, ±20%		141-046-0
	Resistors Carbon		
R101	Chip, 1K ohm, 1/10W, 0805, ±5%		060-102-7
R102	Chip, 10K ohm, 1/10W, 0805, ±5%		060-103-8
R103	Chip, 8.2K ohm, 1/10W, 0805, ±5%		060-822-4
R104	Chip, 6.8K ohm, 1/10W, 0805, ±5%		060-682-4
R105	Chip, 15K ohm, 1/10W, 0805, ±5%		060-153-3
R106	Chip, 100K ohm, 1/10W, 0805, ±5%		060-104-9
R107	Chip, 22K ohm, 1/10W, 0805, ±5%		060-223-3
R108	Chip, 10K ohm, 1/10W, 0805, ±5%		060-103-8
R109	Chip, 33K ohm, 1/10W, 0805, ±5%		060-333-9
R110	Chip, 180K ohm, 1/10W, 0805, ±5%		060-184-1
R111	Chip, 1.8K ohm, 1/10W, 0805, ±5%		060-182-9
R112	Chip, 270K ohm, 1/10W, 0805, ±5%		060-274-9
R113	Chip, 6.8K ohm, 1/10W, 0805, ±5%		060-662-A
CON101	Connector Pin, Angle, 8 Pin, 2mm Pitch		422-372-6
IC101	IC, LM2902M, So-14, Quad Op Amp		060-103-8
	End of Ass'y-MIC PCB		

Ref. No.	Description	RS Part No.	MFR Part No.
	Ass'y, Auto Power Control PCB		
C701	Capacitors, Ceramic, Chip, 220pF 50V, 0805, ±5%		132-220-2
C702	Capacitors, Ceramic, Chip, 220pF 50V, 0805, ±5%		132-220-2
C703	Capacitors, Ceramic, Chip, 220pF 50V, 0805, ±5%		132-220-2
C704	Capacitors, Ceramic, Chip, 220pF 50V, 0805, ±5%		132-220-2
	Resistors Carbon		
R701	Chip, 47K ohm, 1/10W, 0805, ±5%		060-473-2
R702	Chip, 10K ohm, 1/10W, 0805, ±5%		060-103-8
R703	Chip, 1K ohm, 1/10W, 0805, ±5%		060-102-7
R704	Chip, 10K ohm, 1/10W, 0805, ±5%		231-082-0
R705	Chip, 10K ohm, 1/10W, 0805, ±5%		060-103-8
R706	Chip, 1K ohm, 1/10W, 0805, ±5%		060-102-7
R707	Chip, 10K ohm, 1/10W, 0805, ±5%		060-103-8
R708	Chip, 1K ohm, 1/10W, 0805, ±5%		060-102-7
CON701	Connector Pin. Angle, 6 Pin, 2mm Pitch		422-371-5
	Transistors		
Q701	KTA1663(HO), Sot-89, PNP		202-163-6
Q702	KTC3875S(ALG), Sot-23, NPN		202-083-7
Q703	KTC3875S(ALG), Sot-23, NPN		202-083-7
Q704	KTC3875S(ALG), Sot-23, NPN		202-083-7
	End of Ass'y-Auto Power Control PCB		
	Ass'y, PTT PCB		
	Capacitors		
C401	Ceramic, Chip, 0.01μF 50V, 0805, ±10%		130-172-2
C402	Ceramic, Chip, 0.1μF 25V, 0805, +80−20%		130-185-5
C403	Ceramic, Chip, 0.015μF 50V, 0805, ±5%		130-A143
C404	Ceramic, Chip, 0.015μF 50V, 0805, ±5%		130-A14-3
C405	Ceramic, Chip, 0.015μF 50V, 0805, ±5%		130-A14-3
C406	Ceramic, Chip, 0.015μF 50V, 0805, ±5%		130-A14-3
C407	Not Used		130-328-7
C408	Ceramic, Chip, 0.0033μF 50V, 0805, ±5%		130-328-7
C409	Ceramic, Chip, 0.0022μF 50V, 0805, ±5%		130-237-8
C410	Ceramic, Chip, 0.0082μF 50V, 0805, ±5%		130-805-1
C411	Ceramic, Chip, 470pF 50V, 0805, ±5%		134-726-3
C412	Ceramic, Chip, 0.1μF 25V, 0805, +80%−20%		130-185-5
C413	Tantalum, Chip, 10μF 10V, B, ±20%		141-046-0
	Resistors Carbon		
R401	Chip, 2K ohm, 1/10W, 0805, ±5%		060-202-4

Ref. No.	Description	RS Part No.	MFR. Part No.
R402	Chip, 20K ohm, 1/10W, 0805, ±5%		060-203-5
R403	Chip, 33K ohm, 1/10W, 0805, ±5%		060-333-9
R404	Chip, 8.2K ohm, 1/10W, 0805, ±5%		060-822-4
R405	Chip, 15K ohm, 1/10W, 0805, ±5%		060-153-3
R406	Chip, 3.9K ohm, 1/10W, 0805, ±5%		060-392-2
R407	Chip, 75K ohm, 1/10W, 0805, ±5%		060-753-5
R408	Chip, 47K ohm, 1/10W, 0805, ±5%		060-473-2
R409	Chip, 47K ohm, 1/10W, 0805, ±5%		060-473-2
R411	Chip, 47K ohm, 1/10W, 0805, ±5%		060-473-2
R412	Chip, 47K ohm, 1/10W, 0805, ±5%		060-473-2
IC401	IC, LM2902M, So-14, Quad Op Amp		231-082-0
SW401	Switch, Tact, Chip, SKHUPF, 7.2×8.5		436-030-0
SW402	Switch, Tact, Chip, SKHUPF, 7.2×8.5		436-030-0
SW403	Switch, Tact, Chip, SKHUPF, 7.2×8.5		436-030-0
SW404	Switch, Tact, Chip, SKHUPF, 7.2×8.5		436-030-0
	End of Ass'y-PTT PCB		
	Ass'y, Top PCB		
	Resistors		
R802	Fixed, Metalfilm, 6.6K ohm, 1/8W, ±5%		001-682-1
VR801	Variable, 20KA, Audio Volum/Switch		450-523-5
VR802	Variable, 20KB, Squelch Volume		450-524-6
	Connectors		
CON801	Waffer, 8263-0412, 4 Pin, 2mm Pitch		422-265-3
CON802	Waffer, 8283-0612, 6 Pin, 2mm pitch		422-266-4
	Switchs		
SW801	Push Lock, SPPJ422BP011, RF Power SW		432-027-8
SW802	Rotary, EC09P20-04, Channel SW		430-063-0
	End of Ass'y-Top PCB		
	Ass'y, VCO PCB		
	Capacitors		
C201	Tantalum, Chip, 1μF 16V, A, ±20%		141-036-1
C202	Ceramic, Chip, 33pF 50V, 0805, ±5%		133-314-9
C203	Ceramic, Chip, 0.001μF 25V, 0805, ±10%		130-184-4
C204	Tantalum, Chip, 1μF 16V, A, ±20%		141-036-1
C205	Ceramic, Chip, 0.001μF 25V, 0805, ±10%		130-184-4
C206	Ceramic, Chip, 0.001μF 25V, 0805, ±10%		130-184-4
C207	Ceramic, Chip, 15pF(N750) 50V, 0805, ±5%		131-567-1

Ref. No.	Description	RS Part No.	MFR. Part No.
C208	Ceramic, Chip, 100pF 50V, 0805, ±5%		131-027-0
C209	Ceramic, Chip, 2pF 50V, 0805, ±5%		132-011-0
C210	Ceramic, Chip, 2pF 50V, 0805, ±5%		132-011-0
C211	Trintalum, Chip, 10μF 10V, B, ±20%		141-046-0
C212	Ceramic, Chip, 0.1μF 25V, 0805, +80% −20%		130-185-5
C213	Ceramic, Chip, 0.001μF 25V, 0805, ±10%		130-184-4
TC201	Trimmer, Chip, 6pF, Blue, 3.2×4.5		176-012-3
	Coils		
L201	Inductor, Chip, 1μH, 01, ±20%		310-657-0
L202	Transformer Molded, Chip, 6.5t		320-840-1
L203	Inductor, Chip, 10μH, 01, ±10%		310-659-2
L204	Inductor, Chip, 1μH, 01, ±20%		310-657-0
L205	Inductor, Chip, 1μH, 01, ±20%		310-657-0
CON201	Connector Pin, Straight, 8 Pin, 2mm Pitch		422-391-3
	Diodes		
D201	Pin, 1SS241, R/TX Switching		243-073-5
D202	Varicap, 1SV50, OSC		243-025-2
	Resistors Carbon		
R201	Chip, 2.7K ohm, 1/10W, 0805, ±5%		060-272-7
R202	Chip, 2.7K ohm, 1/10W, 0805, ±5%		060-272-7
R203	Chip, 47 ohm, 1/10W, 0805, ±5%		060-470-9
R204	Chip, 47 ohm, 1/10W, 0805, ±5%		060-470-9
R205	Chip, 47 ohm, 1/10W, 0805, ±5%		060-470-9
R206	Chip, 2.7K ohm, 1/10W, 0805, ±5%		060-272-7
R207	Chip, 33 ohm, 1/10W, 0805, ±5%		060-330-6
	Transistor/FET		
Q201	BC848C(1L), Sot-23, NPN		200-001-3
Q202	BC858B(3K), Sot-20, PNP		200-002-4
Q203	KRC110S(NK), NPN		202-096-9
Q204	BF513(S9), N-JFET		200-024-4
	End of Ass'y-Vco PCB		
	Ass'y, Pack Ni-Cad		
	Ass'y, Battery PCB		
D901	Diode, KDS193S(F3), Sot-23, Switching		243-052-6
LED901	LED Lamp, KRA124, Red		251-007-9
	Resistors Carbon		
R901	Chip, 10 ohm, 1/10W, 0805, ±5%		060-100-5
R902	Chip, 4.7K ohm, 1/10W, 0805, ±5%		060-472-1

Ref. No.	Description	RS Part No.	MFR. Part N
903	Chip, 2.2K ohm, 1/10W, 0805, ±5%		060-222-2
	Transistors		
901	KTA1504S(ASG), Sot-23, PNP		202-082-6
902	KTA1663(HD), Sot-89, PNP		202-163-6
303	KTA1504S(ASG), Sot-23, PNP		202-082-6
	End of Ass'y-Battery PCB		
AT901	Battery, Ni-Cad, 7.2V, 600m AH, 6VEAA		420-567-6
	End of Ass'y-Pack Ni-Cad		
	Miscellaneous		
	Capacitors		
2001	Ceramic, Chip, 470pF 50V, 0805, ±10%		134-726-3
2002	Ceramic, 470pF 50V, ±10%		134-710-6
ON2001	Connector, Lead, Housing, 3P, 5mm Speaker		504-807
PK1	Speaker, 8 ohm, 0.5W, 40mm		420-164-5
IIC1	Mike, Condenser, WH-063T, 6 Dia		420-206-0
AT1001	Battery, Lithium, 3V, 3.8×15mm		420-564-3
	End of Miscellaneous		

SEMICONDUCTOR VOLTAGE CHART

- Frequency : 146.100MHz
- Power Supply : 7.2V DC
- Unit : Volts (average)

1. Normal Function

Transistor

Ref. No.	Receive			Transmit		
	E	B	C	E	B	C
Q1	4.95	4.95	0.00	4.93	0.32	4.79
Q2	0.00	0.00	0.00	2.80	2.80	2.00
Q3	0.00	0.00	0.00	0.00	0.02	6.32
Q4	0.00	0.00	6.93	0.00	0.00	6.40
Q6	4.95	4.95	0.00	4.92	0.32	4.89
Q7	4.95	0.32	4.85	4.93	4.93	0.00
Q12	0.10	0.80	1.73	0.00	0.00	0.00
Q13	4.95	4.85	0.00	4.92	4.83	0.00
Q14	2.57	2.57	4.95	2.90	2.90	4.92
Q15	2.57	2.57	0.00	2.90	2.90	0.00

JET

Ref. No.	Receive			Transmit		
	S	G	D	S	G	D
Q8	0.68	0.00	4.83	0.00	0.00	0.00
Q9	0.83	0.00	4.83	0.00	0.00	0.00
Q10	2.20	0.00	4.85	0.00	0.00	0.00

IC

Pin No.	Receive				Transmit			
	IC1	IC2	IC3	IC4	IC1	IC2	IC3	IC4
1	2.37	0.00	6.95	4.78	2.37	0.00	6.80	0.00
2	2.43	4.70	0.00	4.18	2.42	4.70	0.00	0.00
3	0.00	0.00	5.00	3.93	0.00	0.00	5.00	0.00
4	2.58	4.95	–	4.80	2.68	4.92	–	0.00
5	4.70	4.95	–	3.83	4.70	4.92	–	0.00
6	4.70	4.95	–	3.82	4.70	4.92	–	0.00
7	0.00	4.95	–	3.82	0.00	4.92	–	0.00
8	0.10	0.00	–	4.10	0.10	0.00	–	0.00
9	0.00	4.95	–	2.30	0.00	4.92	–	0.00
10	0.00	4.95	–	0.63	0.00	4.92	–	0.00
11	4.92	4.88	–	2.50	4.90	4.86	–	0.00
12	0.00	4.95	–	1.28	0.00	0.33	–	0.00
13	2.71	4.95	–	0.51	2.90	0.33	–	0.00
14	4.93	0.32	–	1.34	4.90	4.92	–	0.00
15	4.93	4.72	–	0.00	4.90	4.70	–	0.00
16	4.93	4.92	–	1.71	4.90	4.92	–	0.00

Diode

Ref. No.	Receive		Transmit	
	A	C	A	C
D1	0.00	0.40	2.80	2.00
D2	0.00	0.00	0.84	0.00
D3	7.20	6.98	7.20	6.80
D4	7.20	6.98	7.20	6.80
D5	1.13	0.37	0.00	2.00

Transistor

Ref. No.	Unsquelch			Squelch		
	E	B	C	E	B	C
Q11	0.00	0.00	4.92	0.00	1.34	0.00

IC

Pin No.	Unsquelch	Squelch
IC2 of 11	0.00	4.88

2. Tone Squelch Function

CTCSS Tone : 100Hz, Only T-SQL ON, Squelch volume must be turned counterclockwise

MIC : Receive (SSG: AF 100Hz, Modulation 700Hz, RF level 1000μV)
Transmit (Unmodulation)

IC

Pin No.	Receive				Transmit	
	Without Tone		With Tone			
	IC1002	IC1003	IC1002	IC1003	IC1002	IC1003
1	1.98	0.11	1.98	0.07	1.98	1.53
2	2.00	4.70	1.96	4.70	1.96	4.70
3	1.55	4.70	1.52	4.70	1.53	4.70
4	1.98	4.70	1.98	4.70	1.98	4.70
5	1.98	4.70	1.98	4.70	1.98	4.70
6	4.89	4.70	4.89	4.70	4.98	4.70
7	1.98	0.00	1.98	0.00	1.98	0.00
8	0.84	0.00	0.28	0.00	0.40	0.00
9	4.85	0.00	4.58	0.00	4.58	0.00
10	0.00	0.98	0.00	0.98	0.00	0.76
11	0.12	2.23	0.12	2.13	0.12	0.00
12	0.00	2.23	0.00	2.12	0.00	0.75
13	1.98	0.14	1.98	0.09	1.98	0.14
14	1.98	1.58	1.98	1.52	1.98	1.53
15	–	0.00	–	0.00	–	1.53
16	–	4.93	–	4.93	–	4.93

Transistor

Ref. No.	T-SQL OFF			T-SQL ON		
	E	B	C	E	B	C
Q1004	4.93	4.95	0.00	4.93	0.33	4.89

3. DTMF Squelch Function

DTMF Tone : Only D-SQL ON, squelch volume must be turned counterclockwise

MIC : Receive (SSG: AF1 69Hz, AF2 1209Hz, Modulation 3.5KHz, RF level 0.25μVpd)

Transmit (Press a button of number "1" continuously)

Transistor

Ref. No.	Receive						Ref. No.	Transmit					
	D-SQL OFF			D-SQL ON				Normal			With DTMF		
	E	B	C	E	B	C		E	B	C	E	B	C
Q1005	4.93	4.95	0.00	4.92	0.31	4.85	Q5	0.00	0.00	0.00	4.95	4.90	0.00

Diode (Receive)

Ref. No.	D-SQL OFF		D-SQL ON	
	A	C	A	C
D1006	0.23	0.00	4.00	3.54

IC/PTT PCB (Band Pass Filter)

Pin No.	Receive				Transmit	
	D-SQL OFF		D-SQL ON		Normal	With DTMF
	IC1007	PTT PCB	IC1007	PTT PCB	IC1004	IC1004
1	0.08	0.000	0.00	4.85	4.93	4.93
2	0.08	0.00	0.00	0.00	0.00	4.70
3	0.00	0.00	4.68	2.10	4.90	4.90
4	0.00	–	4.85	0.00	4.90	4.90
5	0.31	2.10	4.03	2.10	0.00	0.00
6	0.17	–	0.00	–	0.02	2.23
7	0.00	–	4.58	–	4.93	1.97
8	0.00	–	0.00	–	0.08	1.95
9	0.00	–	0.00	–	4.70	4.55
10	0.15	–	1.00	–	4.70	4.56
11	0.03	–	0.36	–	4.70	4.49
12	0.24	–	2.02	–	4.70	4.49
13	0.00	–	0.00	–	0.00	0.00
14	0.24	–	4.00	–	0.00	2.04
15	0.08	–	0.00	–	–	–
16	0.20	–	0.17	–	–	–

k Light Function

istor

Back Light OFF			Back Light ON		
E	B	C	E	B	C
4.93	4.70	0.05	4.92	0.05	1.42
0.00	0.00	0.05	0.00	0.76	1.44
0.00	0.05	4.12	0.75	1.42	2.75

Diode

Ref. No.	Back Light OFF		Back Light ON	
	A	B	A	C
D1001	5.63	4.12	4.89	2.75
D1002	7.16	5.63	7.10	4.89

Board PCB

ction : Normal
: Receive (Squelch)
Transmit (Unmodulation)

CB's

Receive							Transmit					
APC	Audio		HPF	Level	MIC	VCO	APC		Audio	HPF	Level	MIC
	UnSQ.	SQ.					High	Low				
.00	0.00	0.00	2.24	4.93	0.00	4.95	0.00	0.00	0.00	0.00	0.17	0.00
.20	0.00	0.00	0.00	4.90	0.00	0.00	6.75	4.44	0.00	0.00	0.00	1.96
.94	0.00	0.00	4.95	0.00	0.00	0.00	6.82	6.80	0.00	4.93	4.15	1.96
.00	0.00	4.88	2.48	7.10	0.00	0.37	0.23	0.94	4.86	2.47	6.84	0.00
.00	6.36	0.00	2.47	0.00	0.00	2.58	4.79	4.79	0.00	2.47	0.00	4.89
.00	6.95	7.14	0.00	1.65	0.00	2.70	0.00	0.00	6.85	0.00	0.00	0.00
—	3.52	1.30	—	0.00	0.00	0.00	—	—	1.29	—	1.00	0.00
—	—	—	—	0.00	0.00	0.00	—	—	—	—	0.00	0.68
—	—	—	—	4.95	—	—	—	—	—	—	4.92	—
—	—	—	—	4.57	—	—	—	—	—	—	4.57	—

Base Diagram	Manufacturer's NBR	Schematic Ref NBR	
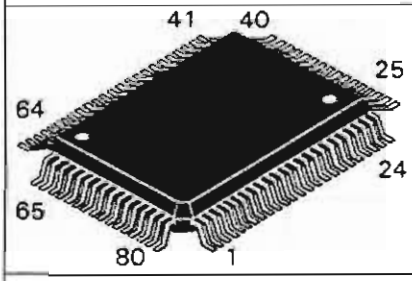	HD404808FS	IC1006	CPU Mask ROM
	MC145170DR2	IC1	PLL
	MC14094BD	IC2	Shift Registor
	MC3371DR2	IC4	IF
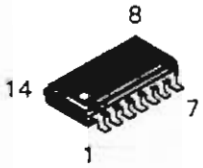	LM339M	IC301	Quad Comparator
	MC74HC4078D	IC1008	8 Input Nor Gate
	LM2902	IC101, IC401, IC501	Quad OP Amp
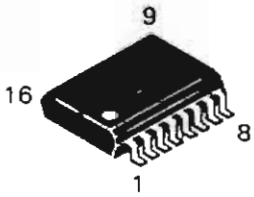	MC142100DW	IC1003	Cross Point Switch
	MC145436DW	IC1007	DTMF Receiver
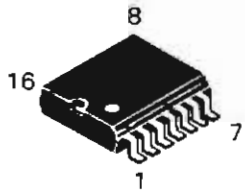	MF6CWM-100	IC1002	Switched Capacitor
	TP5088	IC1004	DTMF Generator
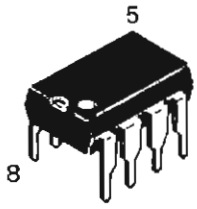	LM386N3	IC601	Audio Amp
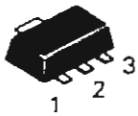 1: OUT 2: V_{DD} 3: V_{SS}	S8054ALR-LN (LN)	IC1005	Voltage Detector
1: OUT 2: GND 3: IN	LM2931AZ	IC3, IC1001	5V Regulator

Base Diagram	Manufactur's NBR	Schematic Ref NBR	
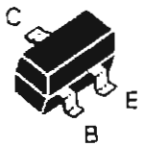	KTA1504S (ASG)	Q13,Q15,Q601,Q901,Q903	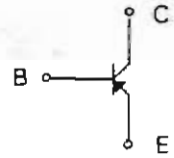
	BC858 (3K)	Q202	
	MMBC1321 (Q4)	Q2,Q12	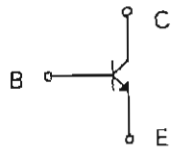
	KTC3875S (ALG)	Q14,Q702,Q703,Q704,Q1002	
	KTN2222S (ZB)	Q1003	
	BC848 (1L)	Q201	
	KRA110S (PK)	Q1,Q6,Q7,Q1001,Q1004, Q1005	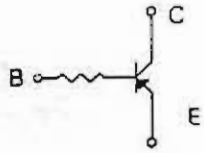
	KRC110S (NK)	Q5,Q11,Q203	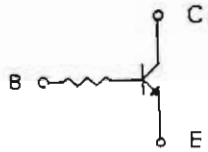
	KRC104S (ND)	Q301,Q602,Q603	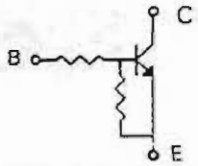
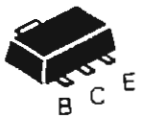	KTA1663 (HO)	Q701,Q902	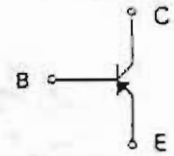
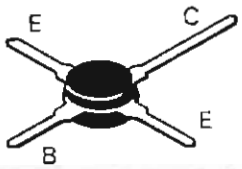	MRF581	Q3	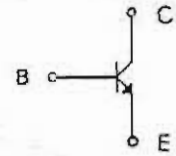
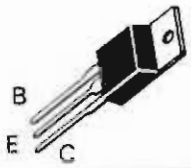	SRFH1900	Q4	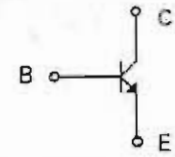
	BF513 (S9)	Q10,Q203	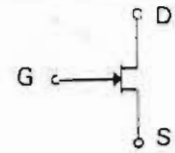
	BF999 (LB)	Q8,Q9	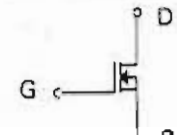

node B: Cathode
No Connection

Base Diagram	Manufactur's NBR	Schematic REF NBR	
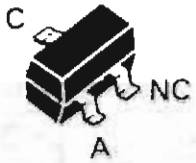	MMBV3401 (4D)	D1,D3,D6	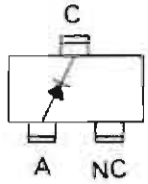
	KDS193S (F3)	D901,D1001,D1003,D1006	
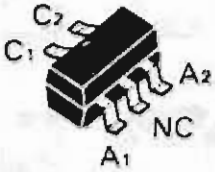	RB471E (D3G)	D1002,D1004,D1005,D1007 D1008	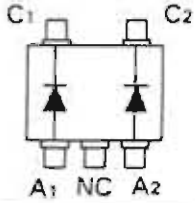
	1SS241 (TY)	D201	
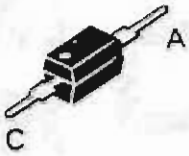	1SV50	D202	
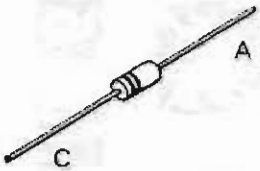	1SS97	D2	
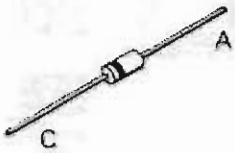	1N5819	D4,D5	
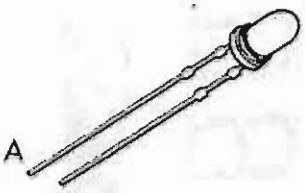	KLR124	D902	
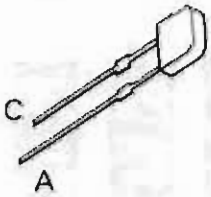	SLP-378H	LED1001, LED1002	

2	3	4	5	6	7	8	9	10	11	12	13	14	15	16	17	18	19	20	21	22	23	24
–	–	V-SC	T X	–	1A	–	2A	–	3A	–	4A	–	5A	–	6A	–	7A	–	8A	–	com1	–
LOCK	+	SAVE	BUSY	M-CH	1F	1B	2F	2B	3F	3B	4F	4B	5F	5B	6F	6B	7F	7B	8F	8B	–	com2
DTMF	–	P1	BATT	INH	1G	1C	2G	2C	3G	3C	4G	4C	5G	5C	6G	6C	7G	7C	8G	8C	–	–
9	T-SQL	P2	FUNC	CALL	1E	1D	2E	2D	3E	3D	4E	4D	5E	5D	6E	6D	7E	7D	8E	8D	–	–

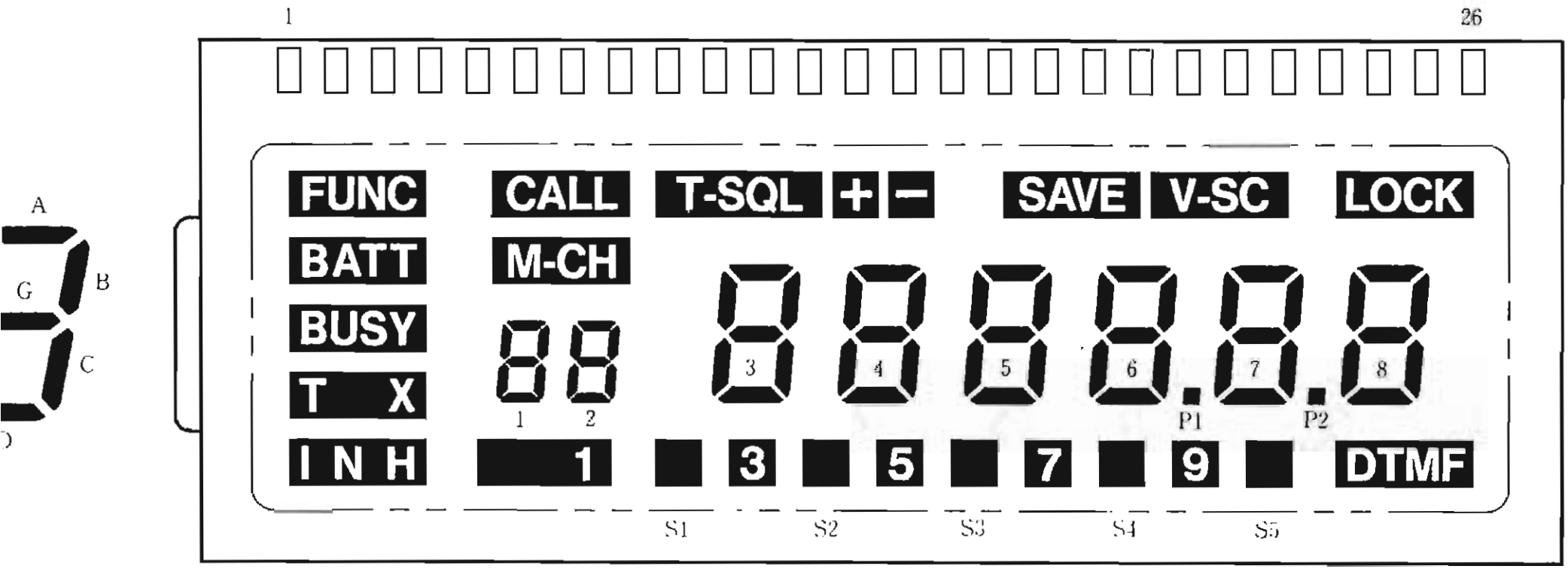

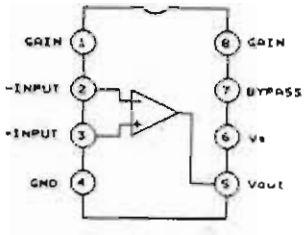

LM386-N3

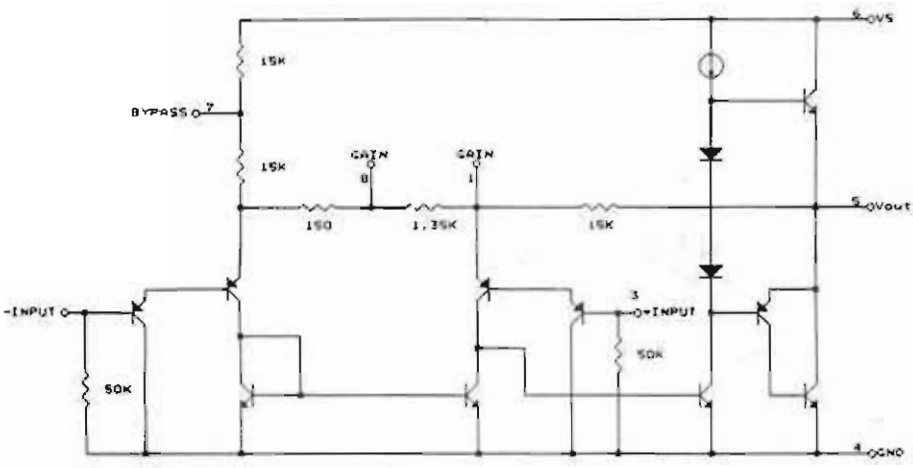

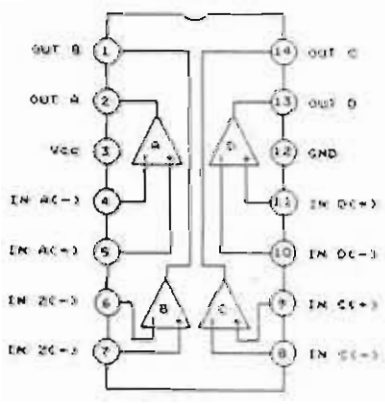

LM339M

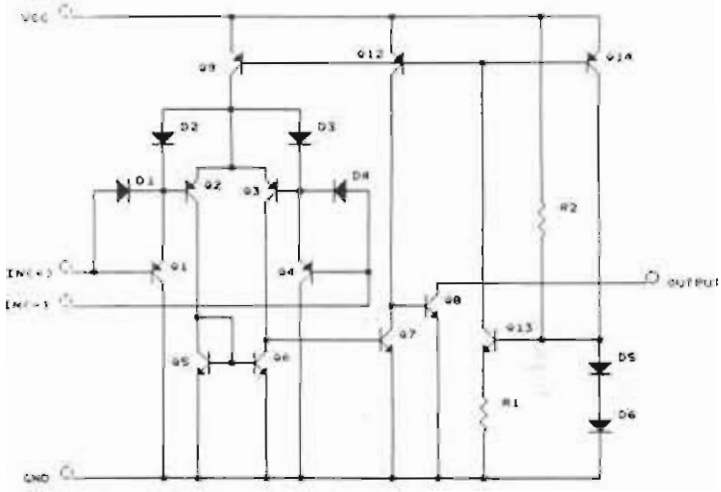

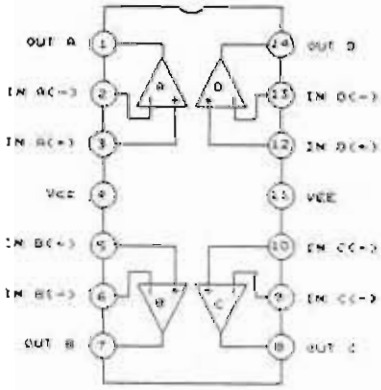

LM2902M

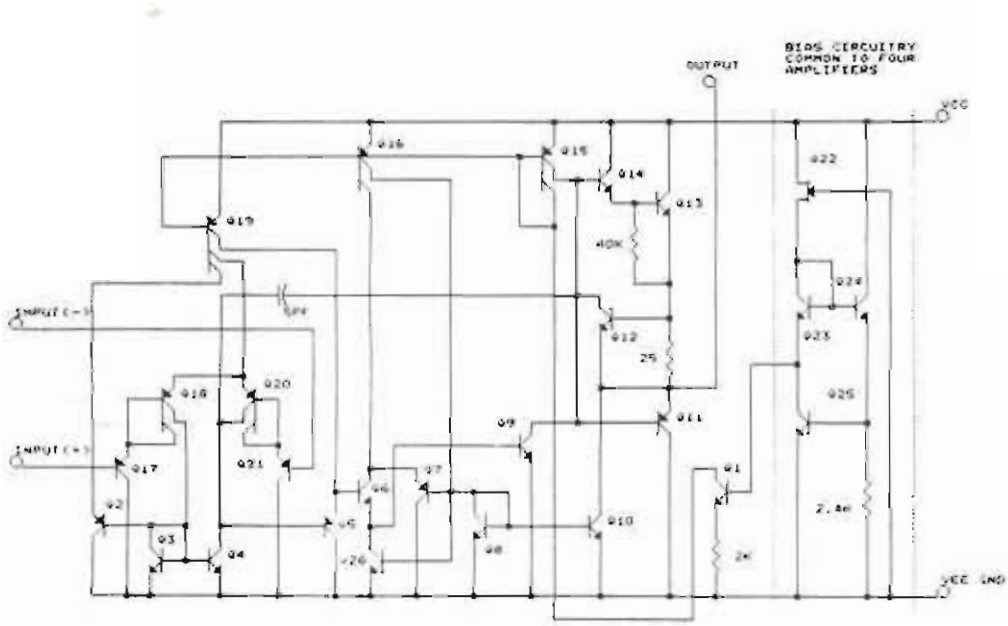

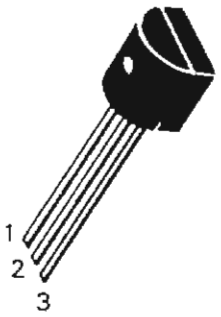

1: OUT
2: GND
3: IN

LM2931AZ

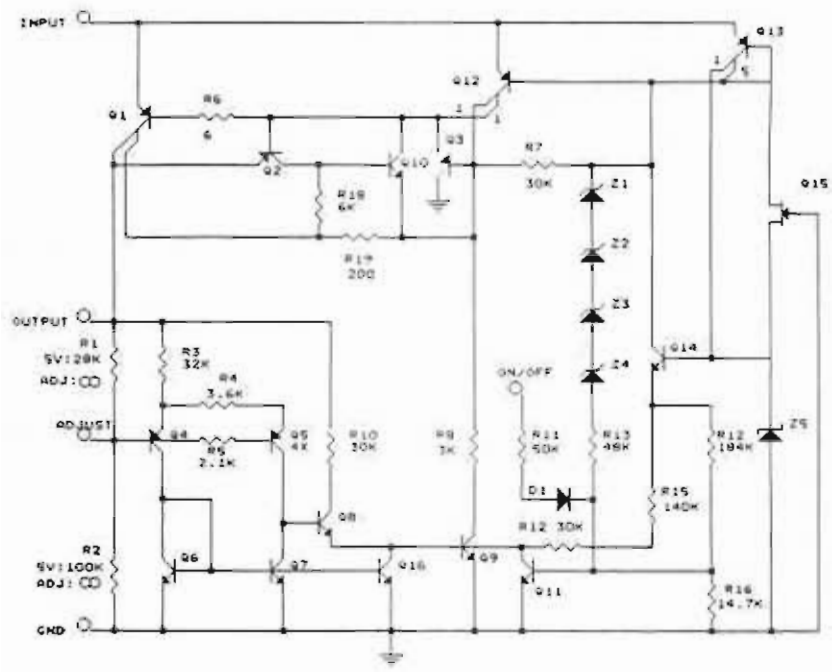

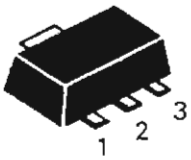

1: OUT
2: V_{DD}
3: Vss

S80554ALR-LN

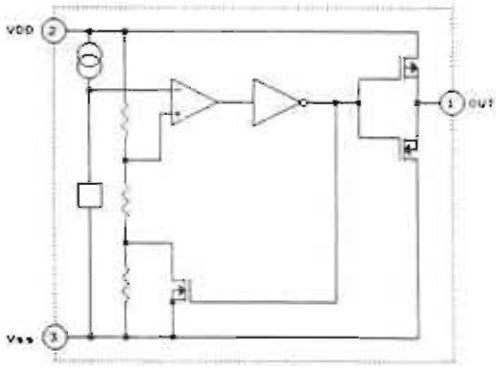

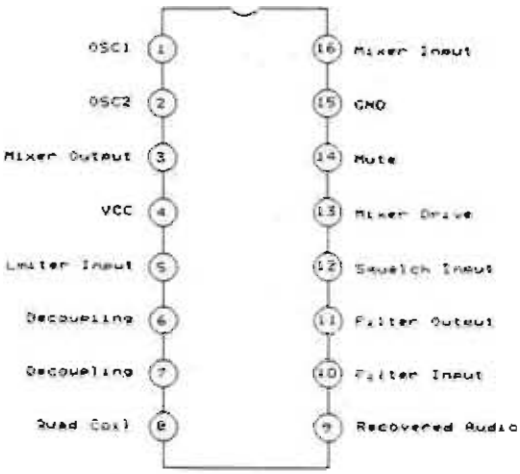

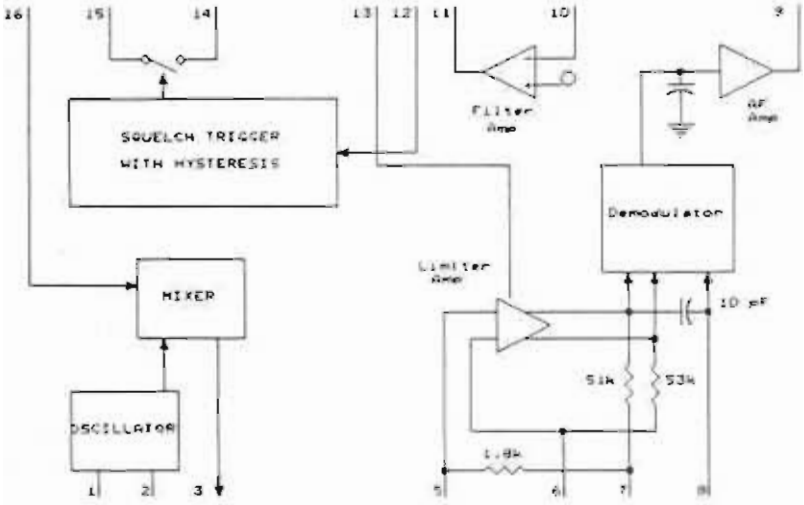

MC3371DR2

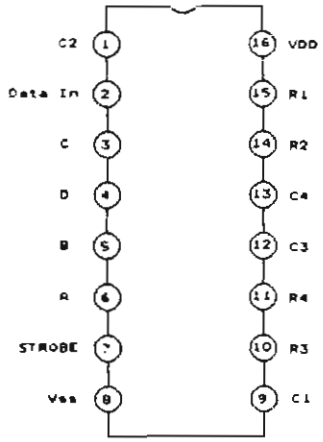

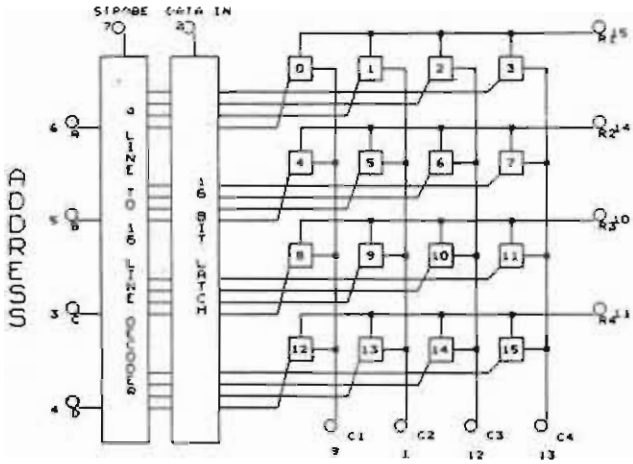

MC142100DW

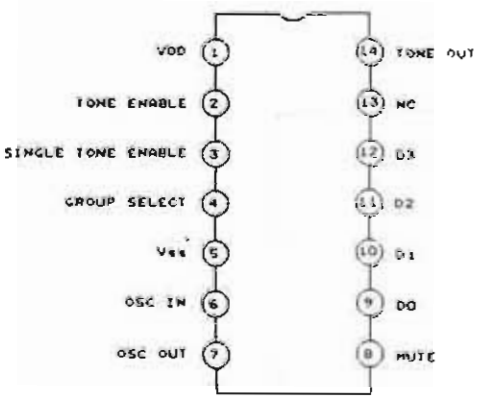

TP5088

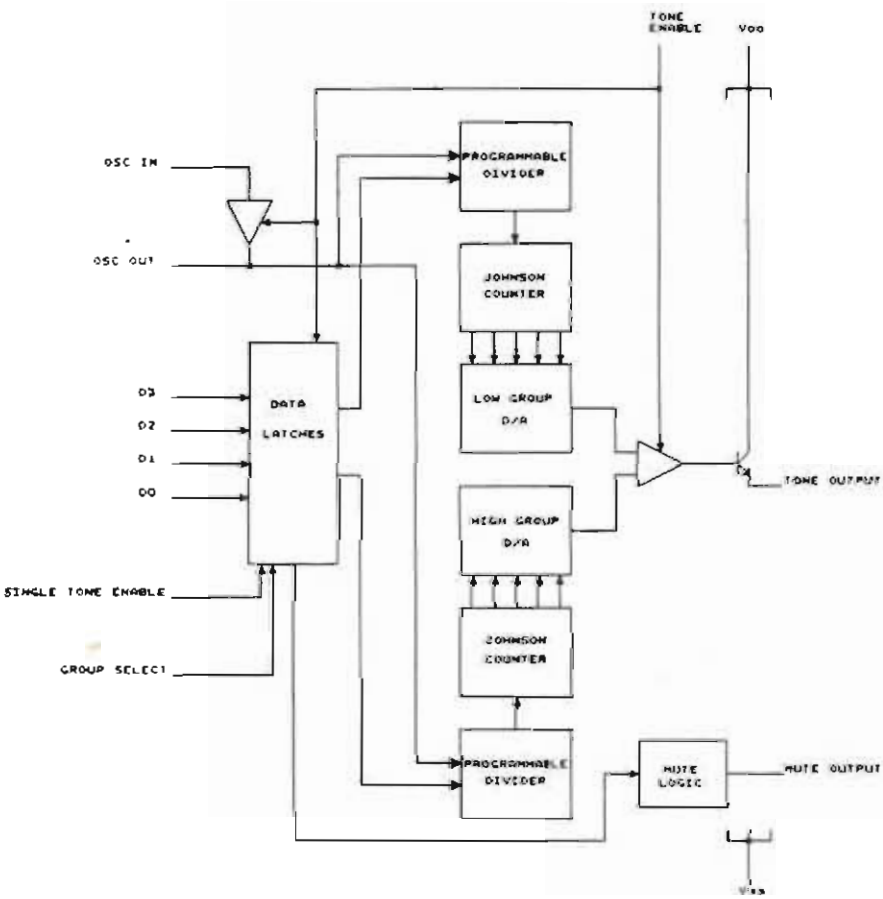

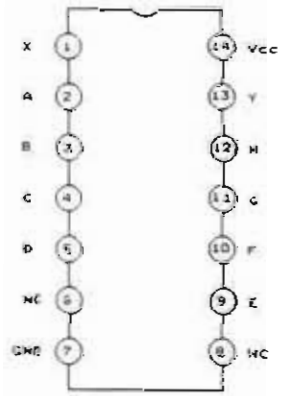

MC74HC4078D

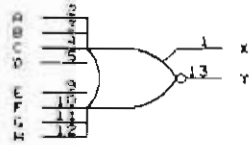

Y=A+B+C+D+E+F+G+H

X=A+B+C+D+E+F+G+H

PIN 14 = Vcc
PIN 7 = GND
PINS 6,8 = NO CONNECTION

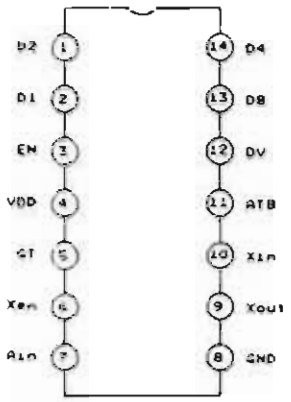

MC145436DW

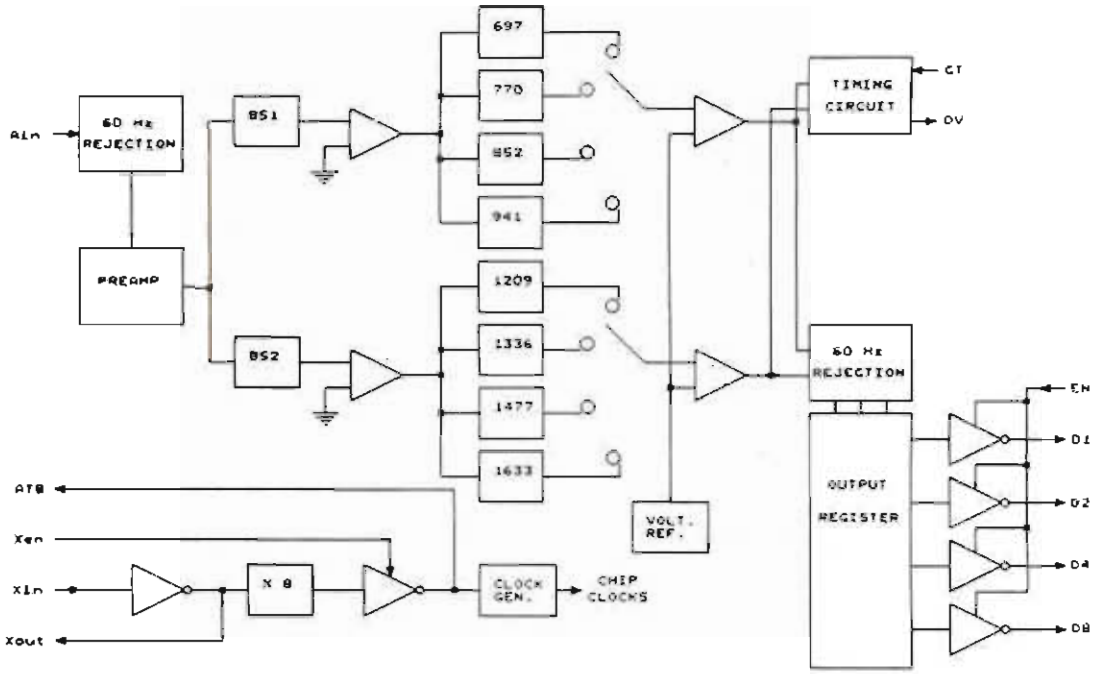

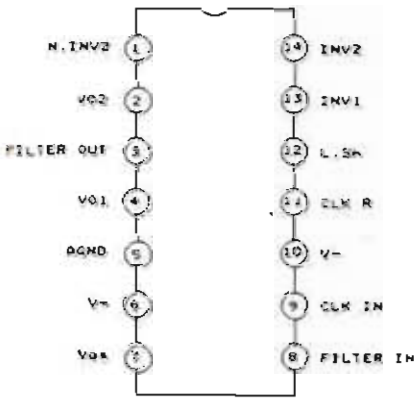

MF6CWM-100

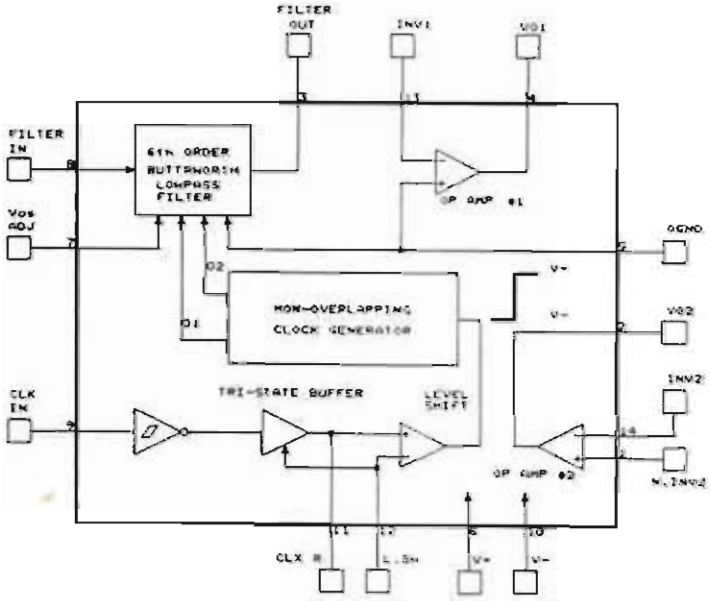

Hexadecimal Codes

DIGIT	OUTPUT CODE			
	D8	D4	D2	D1
1	0	0	0	0
2	0	0	1	0
3	0	0	1	1
4	0	1	0	0
5	0	1	0	1
6	0	1	1	0
7	0	1	1	1
8	1	0	0	0
9	1	0	0	1
0	1	0	1	0
*	1	0	1	1
#	1	1	0	0
A	1	1	1	0
B	1	1	1	0
C	1	1	1	1
D	0	0	0	0

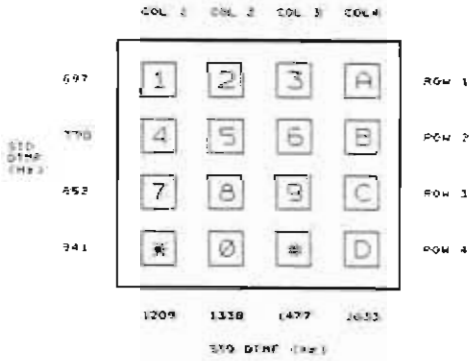

4 × 4 Keyboard Matrix

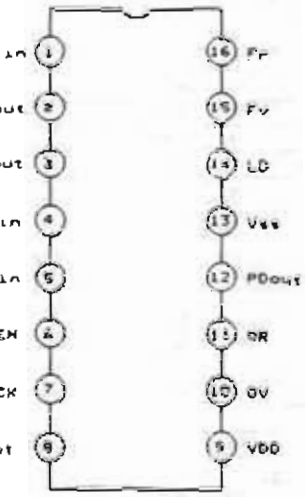

MC145170DR2

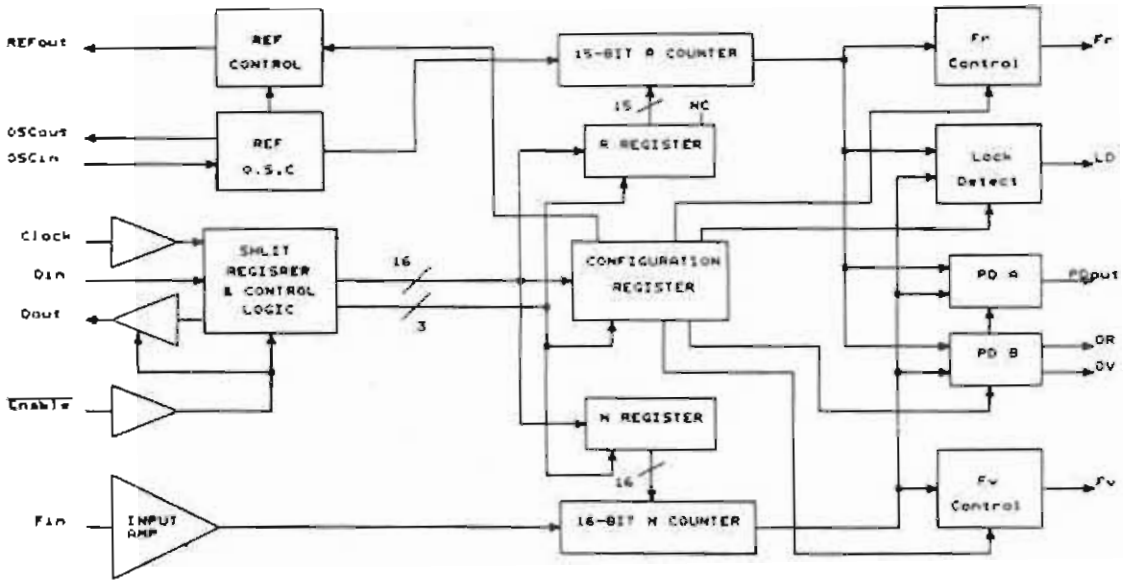

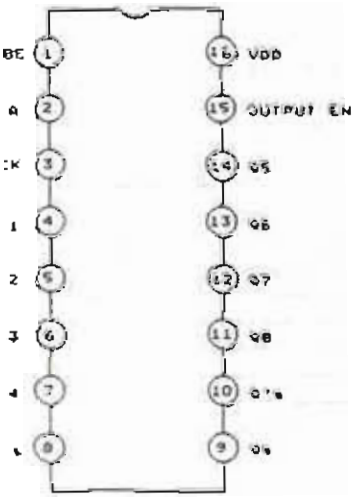

MC14094BD

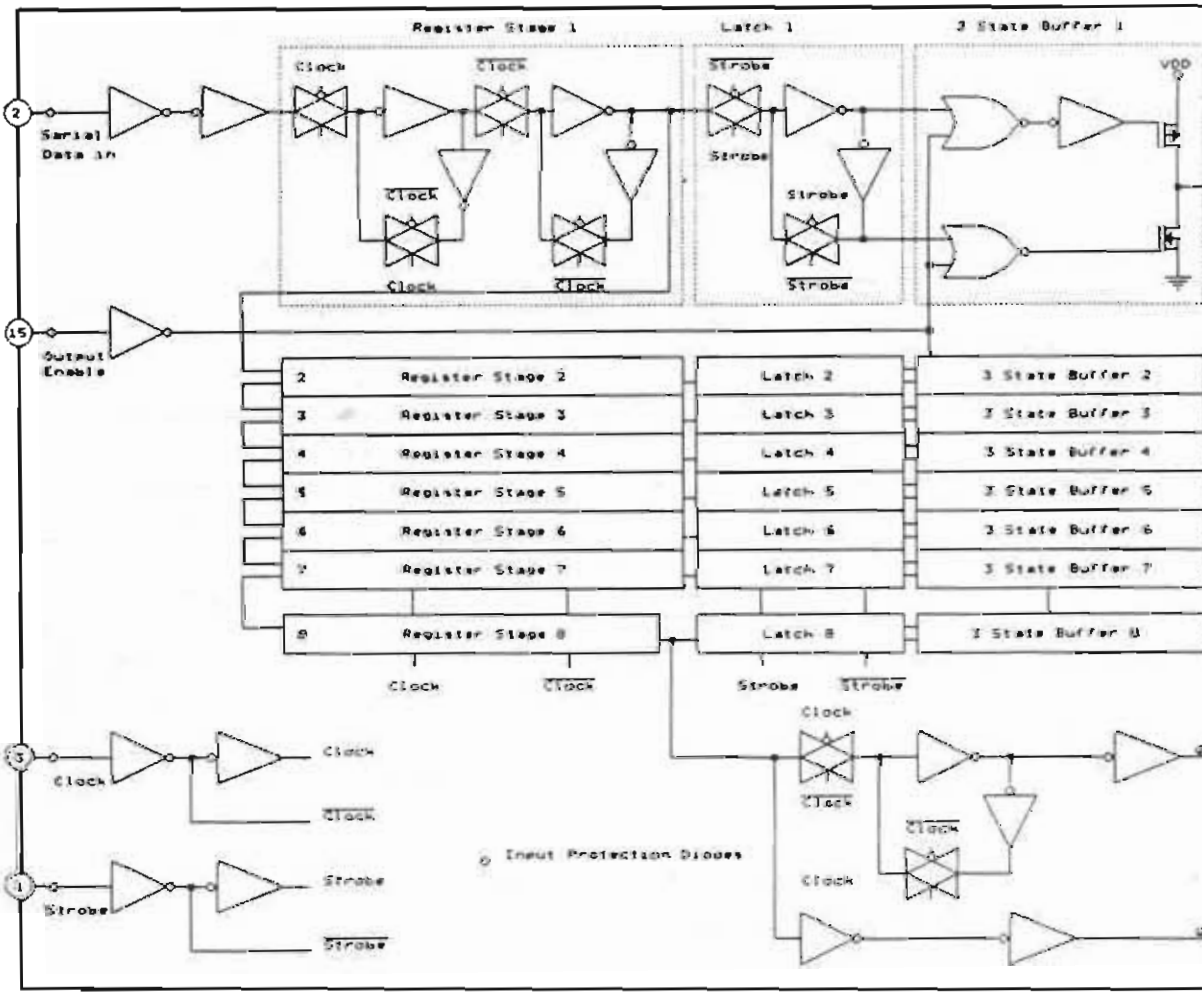

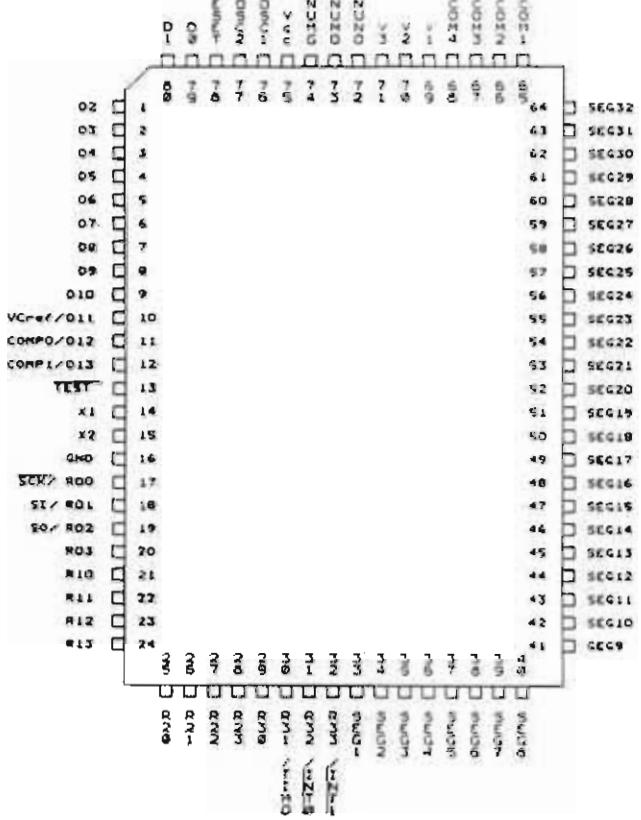

HD404808FS

NO.			NO.		
1	D2	I/O	41	SEG9	O
2	D3	I/O	42	SEG10	O
3	D4	I/O	43	SEG11	O
4	D5	I/O	44	SEG12	O
5	D6	I/O	45	SEG13	O
6	D7	I/O	46	SEG14	O
7	D8	I/O	47	SEG15	O
8	D9	I/O	48	SEG16	O
9	D10	I	49	SEG17	O
10	D11 /VCref		50	SEG18	O
11	D12 /COMPO		51	SEG19	O
12	D13 /COMP1		52	SEG20	O
13	TEST		53	SEG21	O
14	X1		54	SEG22	O
15	X2	O	55	SEG23	O
16	GND		56	SEG24	O
17	R00 /SCK	I/O	57	SEG25	O
18	R01 /SI	I/O	58	SEG26	O
19	R02 /SO	I/O	59	SEG27	O
20	R03	I/O	60	SEG28	O
21	R10	I/O	61	SEG29	O
22	R11	I/O	62	SEG30	O
23	R12	I/O	63	SEG31	O
24	R13	I/O	64	SEG32	O
25	R20	I/O	65	COM1	O
26	R21	I/O	66	COM2	O
27	R22	I/O	67	COM3	O
28	R23	I/O	68	COM4	O
29	R30	I/O	69	V1	
30	R31 /TIMO	I/O	70	V2	
31	R32 /INT0	I/O	71	V3	
32	R33 /INT1	I/O	72	NUMO	
33	SEG1	O	73	NUMO	
34	SEG2	O	74	NUMG	
35	SEG3	O	75	Vcc	
36	SEG4	O	76	OSC1	I
37	SEG5	O	77	OSC2	O
38	SEG6	O	78	RESET	I
39	SEG7	O	79	D0	I/O
40	SEG8	O	80	D1	I/O

I : INPUT PIN
O : OUTPUT PIN
NUMO : OPEN
NUMG : GND

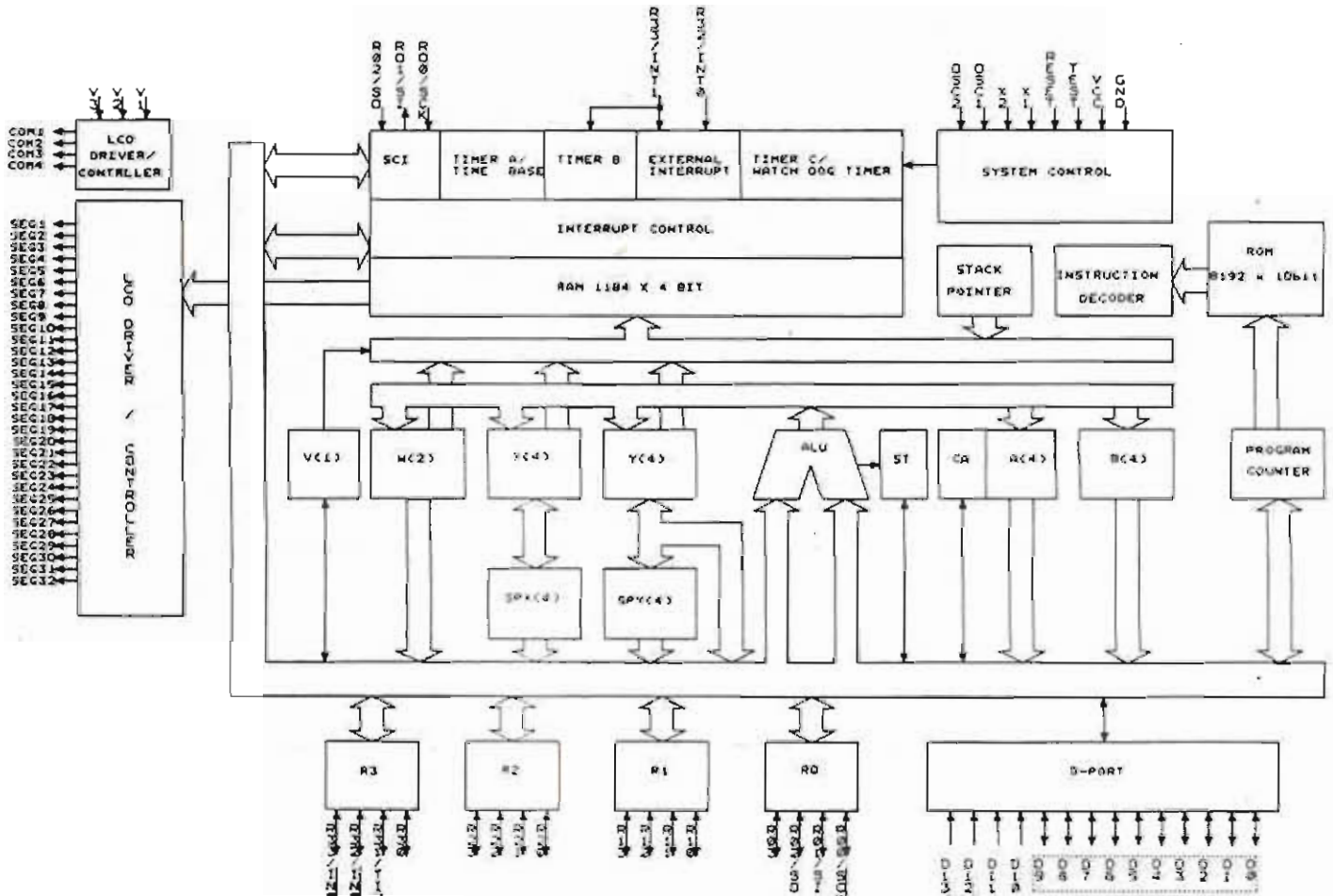

Radio Shack H

EXPANDED RR

Power and Antenna.
screws and open the case.
nd remove resistor R55 (RX Mod 118 -174 M
esistors R77, R123 & R124.
mper from R77 to R123 & R124 (TX Mod 1
ble the radio.

SCHEMATIC DIA

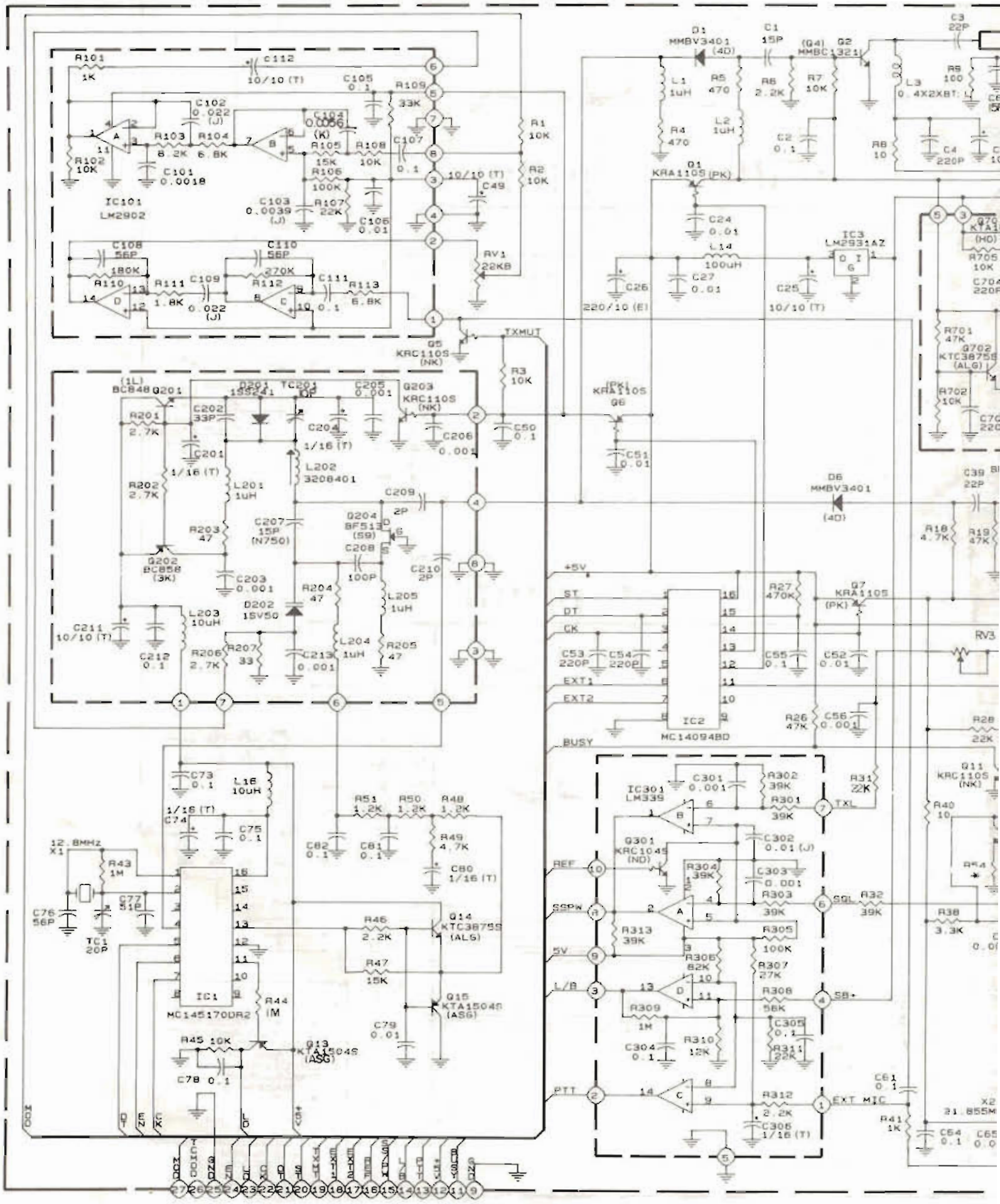

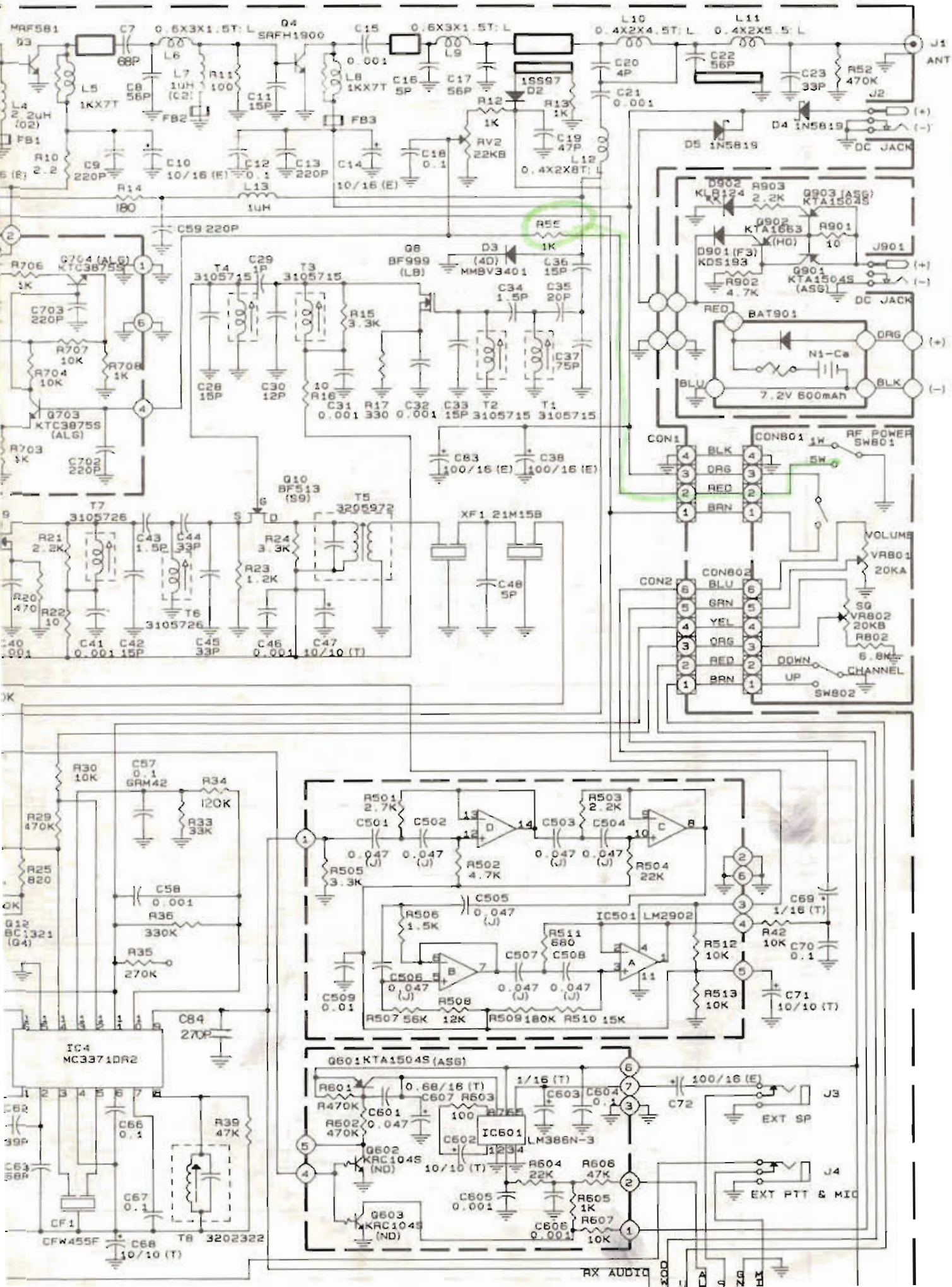
MRF581
Q3
C7
68P
0.6X3X1.5T: L
Q4
SRFH1900
C15
0.001
0.6X3X1.5T: L
L10
0.4X2X4.5T: L
L11
0.4X2X5.5: L
J1
ANT
L5
1KX7T
L6
L7
1UH
(C2)
R11
100
L8
1KX7T
L9
C16
5P
C17
56P
1SS97
D2
C20
4P
C22
56P
C23
33P
R52
470K
L4
2.2UH
(02)
FB1
C8
56P
FB2
C11
15P
FB3
R12
1K
R13
1K
C21
0.001
J2
D4 1N5819
D5 1N5819
DC JACK
R10
2.2
C9
220P
C10
10/16 (E)
C12
0.1
C13
220P
C14
10/16 (E)
C18
0.1
RV2
22KB
C19
47P
L12
0.4X2X8T: L
R14
180
L13
1UH
C59 220P
R5E
1K
Q8
BF999
(LB)
D3
(4D)
MMBV3401
C36
15P
D902
KLB124
KK
R903
2.2K
Q903 (ASG)
KTA1504S
Q902
KTA1663
(HO)
R901
10
D901 (F3)
KDS193
J901
Q901
KTA1504S
(ASG)
R902
4.7K
DC JACK
Q704 (ALG)
KTC3875S
R706
1K
C703
220P
R707
10K
R704
10K
R708
1K
Q703
KTC3875S
(ALG)
R703
1K
C702
220P
T4
3105715
C29
1P
T3
3105715
R15
3.3K
C34
1.5P
C35
20P
C37
75P
C28
15P
C30
12P
R16
10
C31
0.001
R17
330
C32
0.001
C33
15P
T2
3105715
T1
3105715
C83
100/16 (E)
C38
100/16 (E)
RED
BAT901
ORG
N1-Ca
BLU
BLK
7.2V 600mAh
CON1
BLK
ORG
RED
BRN
CON801
RF POWER
SW801
1W
5W
Q10
BF513
(S9)
T7
3105726
T5
3205972
XF1 21M15B
R21
2.2K
C43
1.5P
C44
33P
R24
3.3K
R23
1.2K
C48
5P
R20
470
R22
10
T6
3105726
C41
0.001
C42
15P
C45
33P
C46
0.001
C47
10/10 (T)
VOLUME
VR801
20KA
CON2
CON802
BLU
GRN
YEL
ORG
RED
BRN
SQ
VR802
20KB
R802
6.8K
DOWN
UP
CHANNEL
SW802
R30
10K
C57
0.1
GRM42
R34
120K
R33
33K
R29
470K
R25
820
C58
0.001
R36
330K
Q12
BC1321
(Q4)
R35
270K
C84
270P
IC4
MC3371DR2
R501
2.7K
C501
C502
0.047
(J)
R502
4.7K
R503
2.2K
C503
C504
R504
22K
R505
3.3K
C505
0.047
(J)
R506
1.5K
IC501 LM2902
R511
680
C507
C508
R512
10K
C69
1/16 (T)
R42
10K
C70
0.1
C509
0.01
R507 56K
R508
12K
R509 180K
R510 15K
R513
10K
C71
10/10 (T)
Q601 KTA1504S (ASG)
R601
R470K
C601
0.68/16 (T)
C607
R603
100
R765
1/16 (T)
C603
C604
0.1
C72
100/16 (E)
J3
EXT SP
R602
470K
C602
IC601
LM386N-3
Q602
KRC104S
(ND)
10/10 (T)
R604
22K
R606
47K
J4
EXT PTT & MIC
C605
0.001
R605
1K
Q603
KRC104S
(ND)
C606
0.001
R607
10K
C66
0.1
R39
47K
C67
0.1
CF1
CFW455F
C68
10/10 (T)
T8
3202322
RX AUDIO

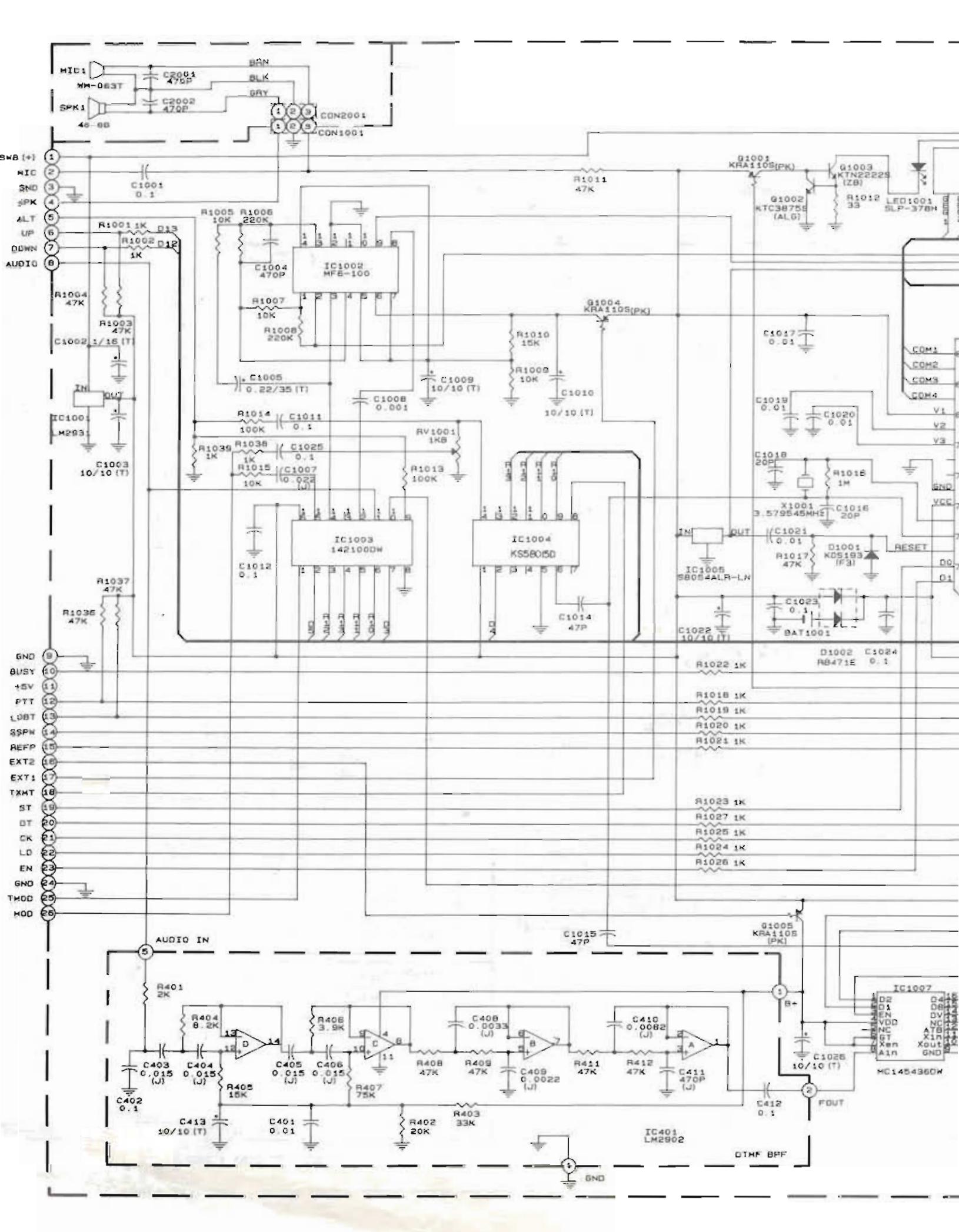
MIC1
MM-083T
SPK1
4Ω-8Ω
C2001 470P
C2002 470P
BRN
BLK
GRY
CON2001
CON1001
SWB (+)
MIC
SND
SPK
ALT
UP
DOWN
AUDIO
C1001 0.1
R1011 47K
Q1001 KRA110S(PK)
Q1003 KTN2222S (ZB)
Q1002 KTC3875S (ALG)
R1012 33
LED1001 SLP-378H
R1001 1K
D13
R1002 1K
D12
R1005 10K
R1006 220K
C1004 470P
IC1002 MF6-100
R1007 10K
R1008 220K
R1004 47K
R1003 47K
C1002 1/16 (T)
IC1001 LM293
C1003 10/10 (T)
C1005 0.22/35 (T)
C1008 0.001
C1009 10/10 (T)
R1010 15K
R1009 10K
C1010 10/10 (T)
Q1004 KRA110S(PK)
C1017 0.01
COM1
COM2
COM3
COM4
V1
V2
V3
C1019 0.01
C1020 0.01
R1014 100K
C1011 0.1
RV1001 1KB
R1039 1K
R1038 1K
C1025 0.1
R1015 10K
C1007 0.022 (J)
R1013 100K
C1018 20P
R1016 1M
X1001 3.579545MHz
C1016 20P
GND
VCC
IC1003 142100DW
IC1004 KS58015D
C1012 0.1
IC1005 S8054ALR-LN
C1021 0.01
R1017 47K
D1001 KDS193 (F3)
RESET
D0
D1
R1037 47K
R1036 47K
C1014 47P
C1023 0.1
BAT1001
C1022 10/10 (T)
D1002 RB471E
C1024 0.1
GND
BUSY
+5V
PTT
LOBT
SSPN
REFP
EXT2
EXT1
TXMT
ST
DT
CK
LD
EN
GND
THOD
HOD
R1022 1K
R1018 1K
R1019 1K
R1020 1K
R1021 1K
R1023 1K
R1027 1K
R1025 1K
R1024 1K
R1026 1K
C1015 47P
Q1005 KRA110S (PK)
AUDIO IN
R401 2K
R404 8.2K
R406 3.9K
C408 0.0033 (J)
C410 0.0082 (J)
C403 0.015 (J)
C404 0.015 (J)
C405 0.015 (J)
C406 0.015 (J)
R408 47K
R409 47K
R411 47K
R412 47K
C409 0.0022 (J)
C411 470P (J)
R405 15K
R407 75K
C402 0.1
C413 10/10 (T)
C401 0.01
R402 20K
R403 33K
IC401 LM2902
DTMF BPF
GND
B+
C1026 10/10 (T)
C412 0.1
FOUT
IC1007
MC145436DW

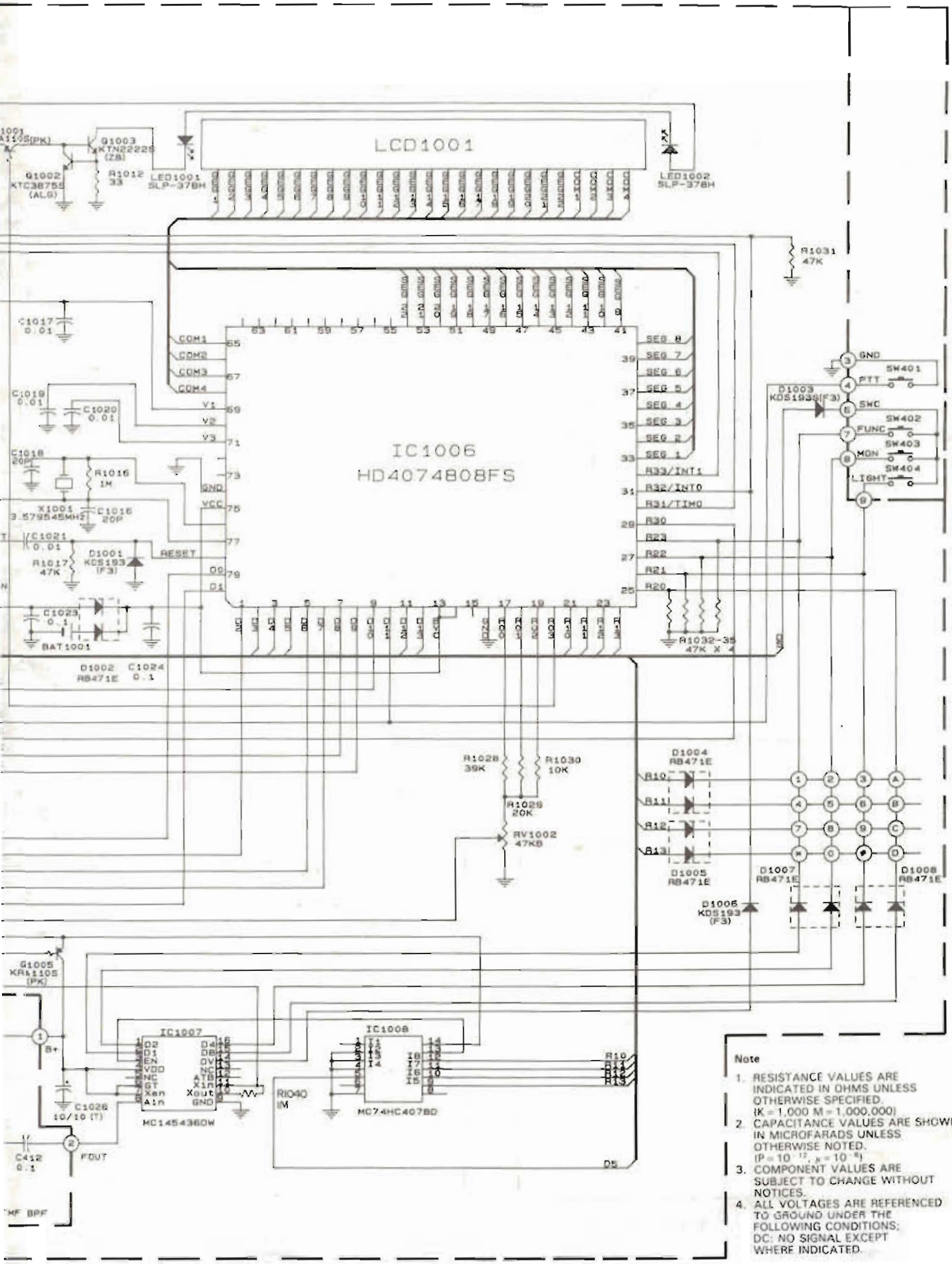

Note

1. RESISTANCE VALUES ARE INDICATED IN OHMS UNLESS OTHERWISE SPECIFIED. (K = 1,000 M = 1,000,000)
2. CAPACITANCE VALUES ARE SHOWN IN MICROFARADS UNLESS OTHERWISE NOTED. ($P = 10^{-12}$, $\mu = 10^{-6}$)
3. COMPONENT VALUES ARE SUBJECT TO CHANGE WITHOUT NOTICES.
4. ALL VOLTAGES ARE REFERENCED TO GROUND UNDER THE FOLLOWING CONDITIONS; DC: NO SIGNAL EXCEPT WHERE INDICATED.