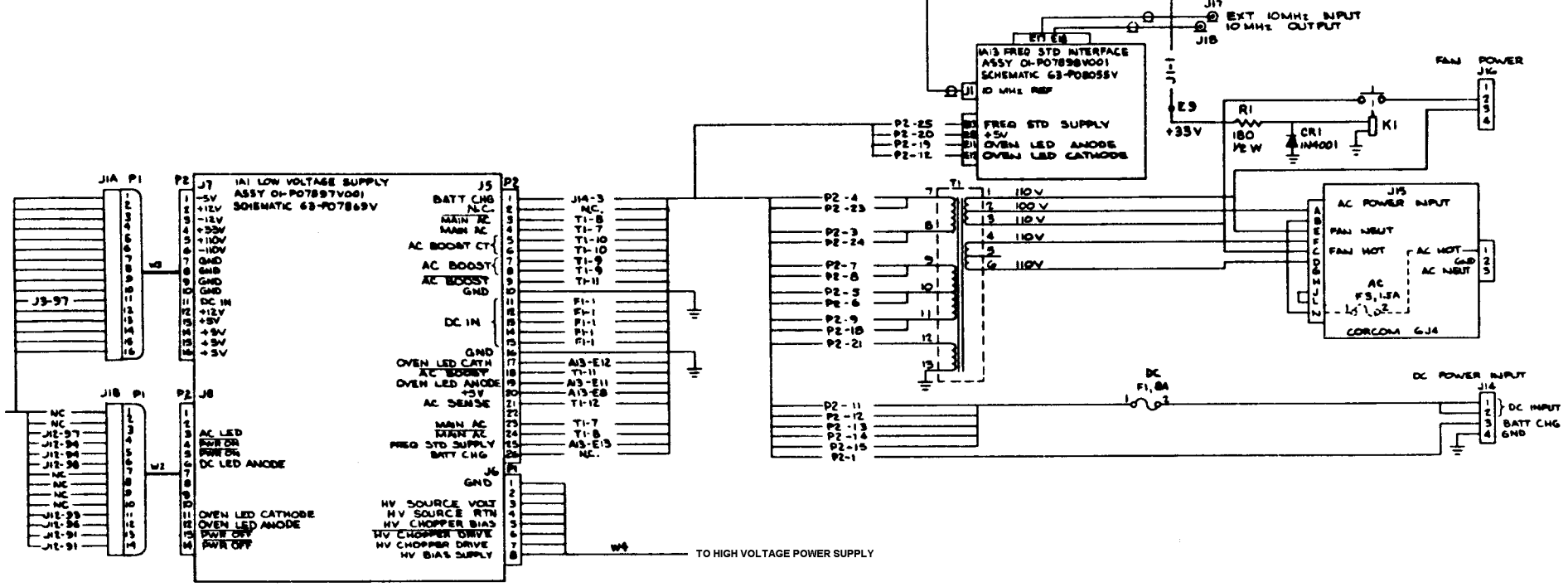
A13 FREQ STD INTERFACE
ASSY 01-P07898V001
SCHEMATIC 63-P08055V
10 MHz REF
FREQ STD SUPPLY
+5V
OVEN LED ANODE
OVEN LED CATHODE
J17
EXT 10MHz INPUT
10 MHz OUTPUT
J18
E3
+35V
R1
180
1/2 W
CR1
1N4001
K1
FAN POWER
J16
J15
AC POWER INPUT
FAN INPUT
FAN HOT
AC HOT
GND
AC NEUT
AC
F3, 1.5A
CORCOM 6J4
110V
100V
DC
F1, 8A
DC POWER INPUT
J14
DC INPUT
BATT CHG
GND
A1 LOW VOLTAGE SUPPLY
ASSY 01-P07897V001
SCHEMATIC 63-P07869V
J7
-5V
+12V
-12V
+35V
+110V
-110V
GND
DC IN
+9V
+5V
J5
BATT CHG
N.C.
MAIN RC
MAIN AC
AC BOOST CT
AC BOOST
GND
DC IN
OVEN LED CATH
AC BOOST
OVEN LED ANODE
+5V
AC SENSE
FREQ STD SUPPLY
BATT CHG
J6
HV SOURCE VOLT
HV SOURCE RTN
HV CHOPPER BIAS
HV CHOPPER DRIVE
HV BIAS SUPPLY
J8
AC LED
PWR DN
DC LED ANODE
OVEN LED CATHODE
OVEN LED ANODE
PWR OFF
J3-97
J12-97
J12-94
J12-95
J12-96
J12-93
J12-92
J12-91
W3
W2
W4
TO HIGH VOLTAGE POWER SUPPLY