Z E T R O N

Model 42 Dispatch Trunking Logic
Operation and Installation Manual

#025-9251D

Technicians Note:

Zetron makes improvements to its products on a regular basis. Each circuit card in the product is marked with a hardware revision letter and if it has software, a version number. When you call Zetron engineers for installation or service assistance, they may ask you for the revision and version of your equipment.

The main circuit card is marked 702-9471x in the front left corner of the card (x is the hardware revision letter, such as A). The main operating software is stored in chip U31, marked with a version number v.v, such as 1.0. The tone generator software is stored in chip U17 with a version number, such as 1.2.

The LTR encode/decode software is in ASIC chip U13 with a version number, such as 3.0.

* *

Please check for change information at the end of this manual.

* *

Copyright 1992–1995 Zetron, Inc.

TABLE OF CONTENTS

1. SYSTEM OVERVIEW

New generation 1-1

Capacities 1-1

Multiple capabilities 1-2
- Logic unit 1-2
- Validator 1-2
- Air time accumulator 1-3
- Site monitor 1-3
- Modem Use..... 1-3

System management by computer 1-4

Model 42 specifications 1-4

2. SYSTEM OPERATION

Dispatch operation (mobile to mobile calling) 2-1

Dispatch air time 2-1

Station ID operation 2-2

Traffic monitor 2-2

Equipment connections 2-3

Repeater connections 2-4

Remote programming 2-5

3. LTR TRUNKING

LTR protocol system 3-1

Trunking buses 3-1

Repeater bus operation 3-2

Subscriber bus operation 3-3

User ID validation 3-4

Trunking data packets 3-5

TABLE OF CONTENTS
(Continued)

4. MODEL 42 SETUP

Overview 4-1

Installation checklist 4-3
- Step 1: Setting the Jumpers 4-4
- Step 2: Clearing memory 4-9
- Step 3: Setting DIP switches 4-11
- Step 4: Installing and modifying the repeater 4-12
- Step 5: Setting repeater levels 4-59
- Step 5A: Setting repeater levels for V2+ firmware 4-62
- Step 6: Making trunking connections 4-65
- Step 7: Testing dispatch calls 4-66
- Step 8: Testing trunking 4-67
- Step 9: Programming users and time 4-68

Trunking connections in detail 4-69

Hardware layout 4-72

Model 42 installation worksheet 4-75

LTR site configuration worksheet 4-76

5. GENERAL HARDWARE INFORMATION

Software update 5-1

Simple update installation 5-2

Full update installation 5-3

Test mode 5-4

Front panel lights 5-5
- Main board lights 5-5
- Ltr protocol lights 5-5

Repeater connections 5-6

Repeater timing 5-7
- Keyup delay 5-8
- COR hold time 5-8
- COR mute time 5-8
- Packet loss time 5-8
- Repeater hold time 5-8
- Repeater timeout timer 5-8

TABLE OF CONTENTS
(Continued)

5. GENERAL HARDWARE INFORMATION (Continued)

Assigning dispatch and interconnect channels 5-9
Smart free channel allocation 5-9
All Zetron channels 5-9
Johnson and Zetron interconnect 5-9
Uniden and Zetron interconnect 5-9

Repeater sharing 5-10

6. TROUBLESHOOTING

Troubleshooting flowchart 6-2
Power-On 6-2
Optional Heater 6-3
Sync present 6-4
Poll present 6-4
Squelch Operation 6-5
Test Mode Operation 6-6
Dispatch Operation Normal 6-8
Local Computer Access 6-13
External Modem Computer Access 6-14
Alarm Operation 6-18
Cross-Busy Operation 6-18

7. PARTS LISTS AND SERVICE DIAGRAMS

Model 42 top assembly (024-0165A) 7-1

Model 42 control board parts list (702-9471F) 7-2

Model 42 control board schematic (008-9471F) 7-6

Model 42 control board silkscreen (702-9471F) 7-11

Model 42 SEA top assembly (024-0166A) 7-12

Model 42 SEA control board parts list (702-9518D) 7-13

Model 42 SEA control board schematic (008-9518D) 7-17

TABLE OF CONTENTS
(Continued)

8. APPENDIX

Glossary 8-1

Model 42 low power conversion 8-5

Power Conversion Table 8-6

WARRANTY STATEMENT

Zetron's warranty is published in the current Zetron *United States Price Book*.

FEDERAL COMMUNICATIONS COMMISSION (FCC) REGULATIONS

This device complies with Part 15 of the FCC rules for a Class A digital device. Operation is subject to the following two conditions:

1. This device may not cause harmful interference.

2. This device must accept any interference received, including interference that may cause undesired operation.

Repair work on this device must be done by Zetron, Inc. or a Zetron authorized repair station.

COPYRIGHT NOTICE

The software in this product is copyrighted by and remains the property of Zetron, Inc. Reproduction, duplication, or disclosure is not permitted. No part of this document may be copied or reproduced in any form without the prior written consent of Zetron, Inc.

TRADEMARKS

EFJ is a trademark of E.F. Johnson Company.

GE is a trademark of General Electric, Inc.

IBM is a trademark of International Business Machines.

LTR is a registered trademark of E.F. Johnson Company.

Multibase is a trademark of Zetron, Inc.

Regency is a trademark of RELM, Inc.

Touch-Tone is a registered trademark of AT&T.

Uniden is a registered trademark of Uniden America.

Zetron is a registered trademark of Zetron, Inc.

All other product names in this document are trademarks or registered trademarks of their respective owners.

INSTALLATION WARNING

This equipment generates, uses, and can radiate radio frequency energy; and if not installed and used in accordance with the instruction manual, may cause interference to radio communications.

Installation of this equipment should be accomplished by personnel with experience in radio trunking systems. Specialized knowledge in telephone systems is also important to ensure a smooth interface when connecting with the Telco network.

1. SYSTEM OVERVIEW

New generation 1-1

Capacities 1-1

Multiple capabilities 1-2
- Logic unit 1-2
- Validator 1-2
- Air time accumulator 1-3
- Site monitor 1-3
- Modem Use..... 1-3

System management by computer 1-4

Model 42 specifications 1-4

1. SYSTEM OVERVIEW

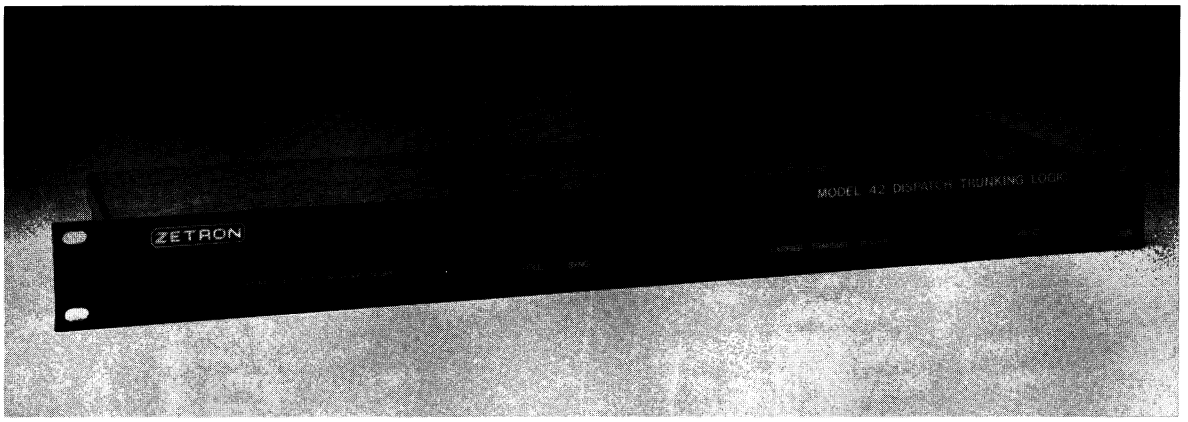

NEW GENERATION

The Zetron Model 42 Dispatch Trunking Logic is an LTR radio channel controller. The design of this unit advances the state of LTR equipment and eliminates many of the quirks of traditional control.

Great importance was placed upon compatibility with every brand of mobile and portable radio, and with the existing trunking system infrastructure pioneered by E.F. Johnson and Uniden. You do not have to replace all of your fixed equipment to use Zetron; simply add on as your system expands. In addition, the Model 42 is fully compatible with the Model 49 Trunking Repeater Manager.

The Model 42 provides a complete LTR logic unit without interconnect capabilities for building an economical multichannel dispatch trunking system. The Model 42 can coexist with Model 49s for interconnect capabilities and is a repeater manager in its own right.

The Model 42 can be connected to an external modem for remote operation and retrieval of billing data from a central office.

CAPACITIES

Zetron complies with the standard E.F. Johnson LTR trunking protocol that supports:

* 1 to 20 RF channels per system
* 250 user IDs per channel (5000 per system)

Air time accumulation for Model 42 home-channel users includes:

* 500 accumulators (prime and non-prime time per user ID) to count 0 to 16,777,216 (194 days)
* 500 hit counters (prime and non-prime time per user ID) to count 0 to 65,536

Hourly repeater loading and "all repeater busy" statistical data is available for:

* Previous 24-hour period
* Today's data from midnight to current time

Real-time site monitoring of repeater activity is provided.

MULTIPLE CAPABILITIES

The Model 42 installs in a radio repeater rack and fully manages the operation of one channel of a trunked radio system. A Model 42 can turn any DPL capable repeater into a fully functional LTR channel. One Model 42 controls one repeater channel.

A Model 42 controller performs the functions of many equipment units: Logic Unit, Validator, Air Time Accumulator, and Site Monitor (see Figure 1-1).

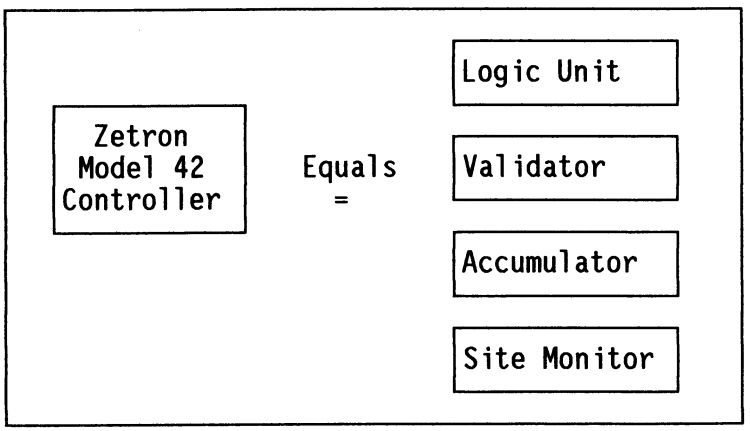

Figure 1-1. Model 42 Capabilities

Logic Unit
As a logic unit, the Model 42 decodes and encodes the trunking data from and to mobiles or portables, routes RX to TX repeat audio, limits mobile conversation lengths, and allocates radio channel access on a multichannel trunking system.

In a multichannel LTR trunked radio system, Model 42s can be mixed with traditional E.F. Johnson Logic units. The Model 42 is compatible with the trunking repeater buses from E.F. Johnson and Uniden. The Model 42 is fully bus compatible with the Model 49 Trunking Repeater Manager.

Validator
The built-in validator permits or prevents access from mobile users with designated dispatch and interconnect IDs. User IDs can be validated or invalidated without site visits, using a PC compatible office computer. The Model 42 can even serve as an EFJ or Uniden compatible validator for Johnson Logic or Uniden Logic on the same repeater bus.

A Zetron proprietary feature provides automatic validation based upon the time of the day. Two time-of-day periods can be specified as prime time. Individual user IDs can be marked as Deferred and have access to the system only during non-prime time. This allows you to provide after hours service which increases system loading without sacrificing system availability during peak periods. Note: The Model 42 considers Saturday and Sunday as non-prime time.

Air Time Accumulator
Totals of air time used on a per user ID basis are accumulated within each Model 42 for its home channel users. This standard feature tracks usage in seconds per ID for two time-of-day periods; prime time and non-prime time. It even keeps track of all attempts at system access by invalid user IDs for that home channel.

With a prime time premium billing rate in your invoicing system, you can encourage off hours business and smooth out peak usage. The air time accumulator is equipped with a huge memory that keeps track of 194 days of air time used per ID.

Regardless of which channel is used by a particular mobile user ID, its home channel Model 42 accumulates its air time usage total. You retrieve the air time totals from the site with your PC office computer via telephone modem.

The air time for dispatch IDs is kept accurate to the nearest second since LTR dispatches are short fragments of conversations.

Site Monitor
The site monitor feature displays, on your computer screen, the activity for every repeater channel at the radio site. Activity is shown for *all* repeater logic units (Johnson, Uniden, and Zetron) connected to the repeater bus. You use Multibase to access your Model 42 at the remote site.

As mobiles key and release their PTT, the display is updated automatically. Depending upon the modem data rate, there is approximately a 2- to 4-second delay from site activity to display changes.

The screen shows each repeater number, the mobile (home/ID) using that channel, the type of mobile call (dispatch or interconnect), and how long that conversation has been in progress. If the mobile has been invalidated in the database, a home=21 will appear on the screen. If the repeater is busied up to send the Station ID or because of a cross-busy condition, a 253 will appear in the ID field.

Modem Use
An external modem with its own end-to-end telephone line may be attached to the Model 42 front panel RS-232 port. Configuration switches on the Model 42 select the preferred modem data rate of 300, 1200, or 2400 bps.

SYSTEM MANAGEMENT BY COMPUTER

Programming of the Model 42's mobile user database is performed with a PC compatible office computer running Zetron's Multibase software system. This software keeps track of Model 42s or Model 49s on multiple channels at multiple sites. The settings are programmed "off-line" on computer disk and loaded into the Model 42s and Model 49s with a telephone call via the computer's modem.

In like manner, billing data and repeater loading information are retrieved from the channel controllers for processing in the office computer. Since the modem links are used only during actual data transfers, not during clerical "thinking" time, telephone charges are kept to a minimum.

Repeater loading histograms and a real-time site monitor display are also standard features of the Model 42. You can even use Zetron's ZEBRA billing software to process the usage data from your Model 42s and Model 49s and print customer invoices. ZEBRA is a full accounts receivable program and integrates with ACCPAC Plus accounting modules from Computer Associates.

Special Note: Only one telephone call to the site is required to retrieve data from all of your Zetron Model 42s and Model 49s. Zetron's proprietary subscriber bus allows one Model 42 or Model 49 to access all the others at the radio site.

When the Model 42 is connected to the office computer, it may be used to retrieve call detail data from connected Model 49s. The Model 49s can be configured through the Model 42 and Multibase.

MODEL 42 SPECIFICATIONS

Physical

Height	1.75 in.
Width	19 in.
Depth	4.8 in.
Weight	2.60 lb (US)
Mounts	The front panel is configured for standard 19-inch rack mounting, with holes vertically separated by 1.25 in. (1 "rack space").

Power Supply

DC Input	+10 Vdc to +16 Vdc
DC Power	8.7 Wdc @ 16 Vdc input when PTT active

Environmental

Temperature Range	+32 to +140 degrees Fahrenheit (0 to +70 degrees Celsius) Optional heater for cold environment operation down to -22 degrees Fahrenheit (-30 degrees Celsius)
Humidity	5% to 90% relative humidity, non-condensing

Telephone Interface

There is no telco support for this product.

Radio Interface

Connector	15-pin Weidmueller card-edge connector
Connections	AC/DC Power Input, PTT Output (optional Relay NO/COM/NC or Transistor open collector), Control Line Output, Sense Input, COR (Carrier Operated Relay) Output, Tx Audio, SubOut (Tx Data), Disc In (Rx Audio).
Rx Audio Input	100 mVpp to 10 Vpp in two selectable ranges.
Rx Audio Impedance	Zin = 4.7 KΩ minimum
Tx Audio Output	0 to 8 Vpp in two selectable ranges.
Tx Audio Impedance	Zout = 1.2 KΩ maximum
SubOut Level	20 mVpp to 2 Vpp in two selectable ranges.
SubOut Impedance	Zout = 1 KΩ or 90 Ω, Dependant upon level range selected. AC or DC coupled, jumper selectable.
PTT Outputs	Selectable Outputs Relay Type: Normally Open (NO) Closes for PTT Common (COM) Strapped in Cable Normally Closed (NC) Opens for PTT Transistor Type : Open Collector Output
Control 1	Cross-Busy Output Relay Type: Normally Open (NO) Closes for PTT Common (COM) Strapped in Cable Normally Closed (NC) Opens for PTT
Sense 1	Cross-Busy Input 0 to 5 Vdc Input Level range Active Low (Less than 0.6 Vdc)

2. SYSTEM OPERATION

Dispatch operation (mobile to mobile calling) 2-1

Dispatch air time 2-1

Station ID operation 2-2

Traffic monitor 2-2

Equipment connections 2-3

Repeater connections 2-4

Remote programming 2-5

2. SYSTEM OPERATION

DISPATCH OPERATION (Mobile to Mobile Calling)

The Model 42 is more than just a traditional trunking logic unit. It performs the following major functions:

* Controls 2 to 20 channel repeater trunking or 1 channel stand-alone sites
* Accumulates air time for two time-of-day periods (prime and non-prime time) for its home users
* Validates mobile access to prohibit invalid mobile users
* Monitors mobile activity in real time on each repeater
* Stores repeater loading data for current and previous day's system usage
* Stores the amount of time that all repeaters are busy to help you evaluate system usage

When a mobile user wants to call a group of users, he/she presses the microphone push-to-talk button on his/her mobile radio. The radio tunes to a free channel and transponds data packets with the repeater logic unit that then becomes busy with the calling mobile.

Using the repeater data bus, the repeater tells all other repeaters which user group (home channel + ID) is being called. If the calling mobile is not on its home channel, then the members of the called group are still tuned to their home channel repeater. To get the group together on the calling repeater, the home repeater sends "Go To" data packets to cause the called radios to tune to the calling repeater frequency.

As long as the calling mobile remains keyed, the logic unit sends data packets to keep the group together, and the calling mobile can talk to the group. As soon as the calling mobile releases his/her microphone button, the logic unit sends the group "home" with a "turn-off" code and releases the repeater for another one-way "conversation".

This "transmission trunking" is very efficient in the use of air time. Less than 300 milliseconds is required to get a dispatch message going, and less than 200 milliseconds to release the channel each time.

DISPATCH AIR TIME

Each Model 42 is equipped to total the air time used and number of accesses for two time-of-day periods by each of the 250 IDs on that repeater home channel. By monitoring the repeater bus, the Model 42 records usage by its home channel users, even when the users are trunked to other channels.

This capability makes it easy for you to add air time billing to your system by replacing one of your existing logic units with a Zetron one, and keeping your users "homed" to the Model 42. You can then move your old logic to new channels that have no home users, but can be used for trunking.

Air time accumulation is kept to the nearest second, so customers are accurately billed for their short dispatch conversations. When you import the air time values into your billing system, you can convert these totals into minutes if necessary. Multibase retrieves the air time totals into your office computer for import into your billing system.

STATION ID OPERATION

The built-in tone generator plus software on the main board provides station identification using International Morse Code CW ID. When enabled through Multibase programming in the Repeater Configuration database, transmissions occur automatically at programmable intervals. If you already have a channel transmitting station IDs, you simply disable the Model 42 through programming.

During station identification, the Model 42 sends subaudible LTR data packets with an ID=253, thereby marking the channel busy so that mobiles will trunk off to a free channel (unlike some systems where mobiles end up camping on until identification finishes). Also, if the ID timer comes due while the channel is busy, the Model 42 waits for the channel to go idle before commencing station identification.

TRAFFIC MONITOR

The traffic monitor feature of the Model 42 displays, on your computer screen, the activity for each repeater channel at the selected site. Activity is shown for <u>all</u> repeater logic units connected to the repeater bus (Johnson, Uniden, and Zetron). You use Multibase to connect to your Model 42 at the remote site through the front panel RS-232 connector and external modem. (For further explanation, see the Model 49 Multibase Operation Manual, Part No. 025-9173. The Multibase manual applies to Model 42s also.)

EQUIPMENT CONNECTIONS

The block diagram in Figure 2-1 shows the architecture of a typical trunked radio system. Note that the radio controllers (Zetron Model 42 and Model 49) communicate with each other via a repeater bus (which can be shared with E.F. Johnson or Uniden logic units) to allocate repeater channel use.

A second bus, the subscriber bus, is used by Zetron Model 42s and Model 49s for database and billing information transmission. With this bus, one phone call to any Model 42 can update the database and retrieve billing data for all Zetron channels.

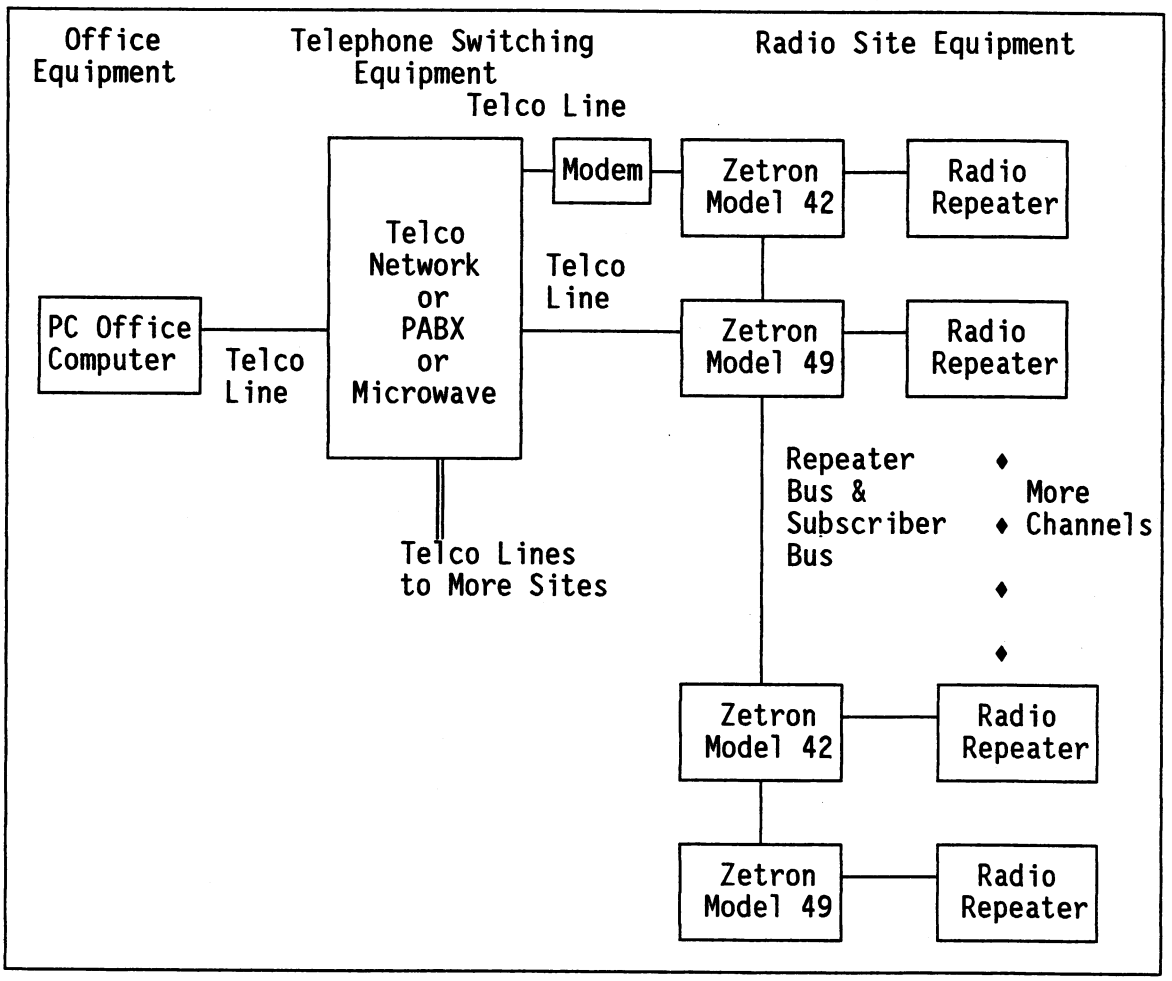

Figure 2-1. System Block Diagram

REPEATER CONNECTIONS

Each radio channel consists of a channel controller and a radio repeater. Figure 2-2 illustrates the typical connections between the controller and the repeater: discriminator audio, transmit audio/data, PTT, and power/ground.

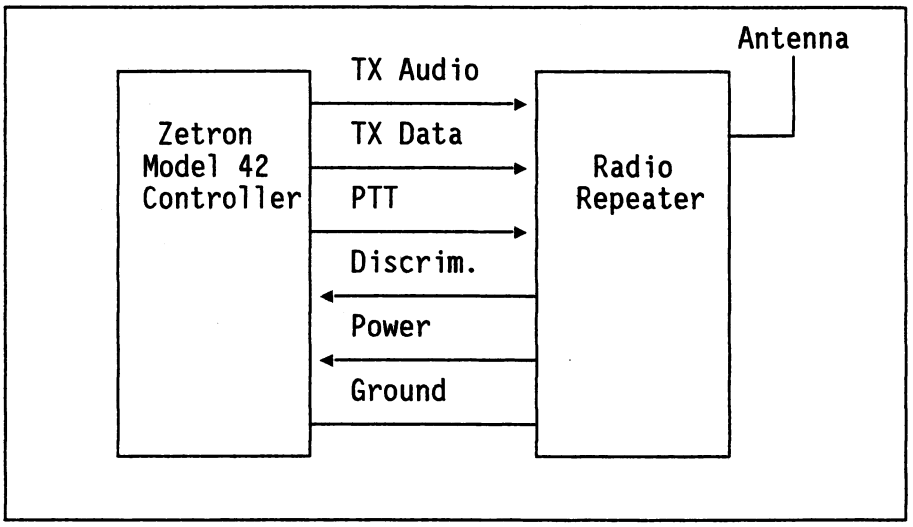

Figure 2-2. Model 42 to Repeater Connections

REMOTE PROGRAMMING

Many operational settings for the mobile users are programmable on a per user basis. These settings are stored in non-volatile memory in the Model 42 which is kept intact even during power failures. Programming of these settings is performed with Zetron's Multibase software on an IBM compatible personal computer and loaded into the Model 42 either to the site by telephone modem or locally in the shop via an RS-232 port, as indicated in Figure 2-3.

You can handle multiple Model 42s at multiple sites with one Multibase software system. Programming settings and retrieving billing data is performed right from your office. With Zetron's automatic cloning, one telephone call to any Model 42 at the site automatically loads all of the Zetron units without extra telephone calls.

Multibase is easy for clerical personnel to learn and use. Arrow keys permit navigation on the screen to select menu items and to fill in forms. Help screens give specific instructions, examples, and hints for each operation. Refer to the *Model 49 Multibase Operation Manual* (Part No. 025-9173) or to the *Model 49 Multibase, Version 6.1 or Above Operation Manual* (Part No. 025-9297) for more information.

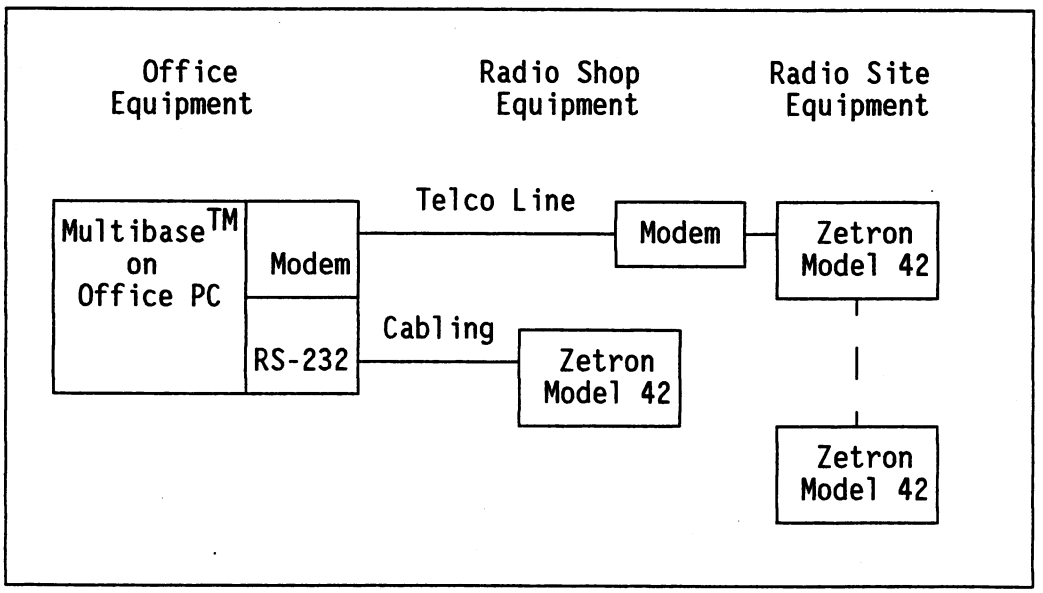

Figure 2-3. Model 42 Local/Remote Programming

3. LTR TRUNKING

LTR protocol system 3-1

Trunking buses 3-1

Repeater bus operation 3-2

Subscriber bus operation 3-3

User ID validation 3-4

Trunking data packets 3-5

3. LTR TRUNKING

LTR PROTOCOL SYSTEM

The LTR protocol system decodes and encodes the LTR subaudible data streams through the radio repeater from the mobile radios using a proprietary LTR processor. This system has analog filtering and data processing to extract data packets from noisy radio channels.

Simple TX and RX data level adjustments on the Model 42's front panel set the RF channel deviation levels (950 Hz for 800 MHz, 800 Hz for 900 MHz) recommended for the subaudible data. Indicator lamps show transmitted and received data packets as well as receive signal quality. Quick communication between the LTR processor and the main Model 42 processor keeps LTR data packets flowing smoothly from/to the mobile radios to maintain channel efficiency.

TRUNKING BUSES

Multichannel repeater channel allocation is performed using the high-speed repeater bus. The Model 42 is configured with jumpers for compatibility with the E.F. Johnson HDB or the Uniden RNDL bus (see Figures 3-1 and 3-2). Each repeater controller (numbered 1 through 20) has a designated time slot on the bus, during which it indicates the currently active user on its repeater. The other control units use this information to determine available free channels and to send "go to" commands to gather groups of mobiles. Since Zetron is compatible with standard buses, you can add Zetron Model 42s to your existing LTR trunking systems.

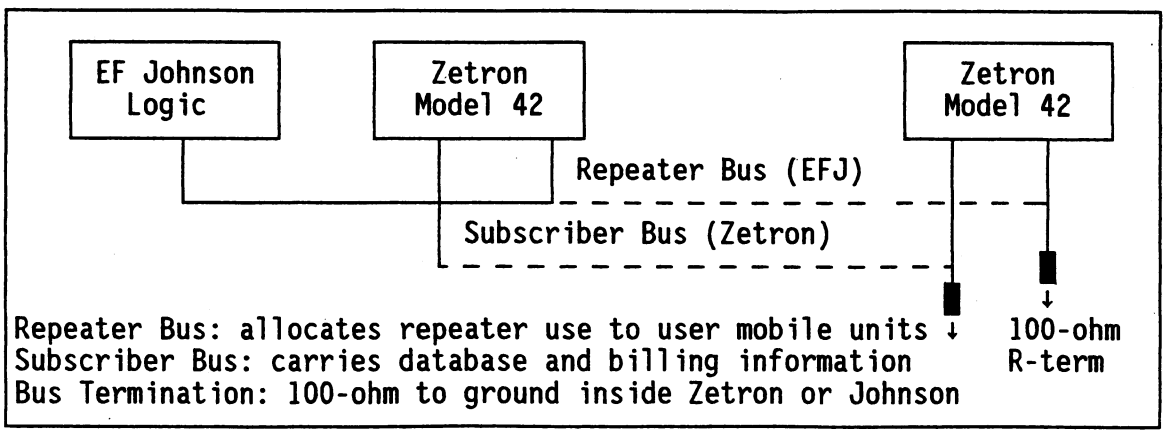

Figure 3-1. Model 42 Trunking Buses (Johnson Compatible)

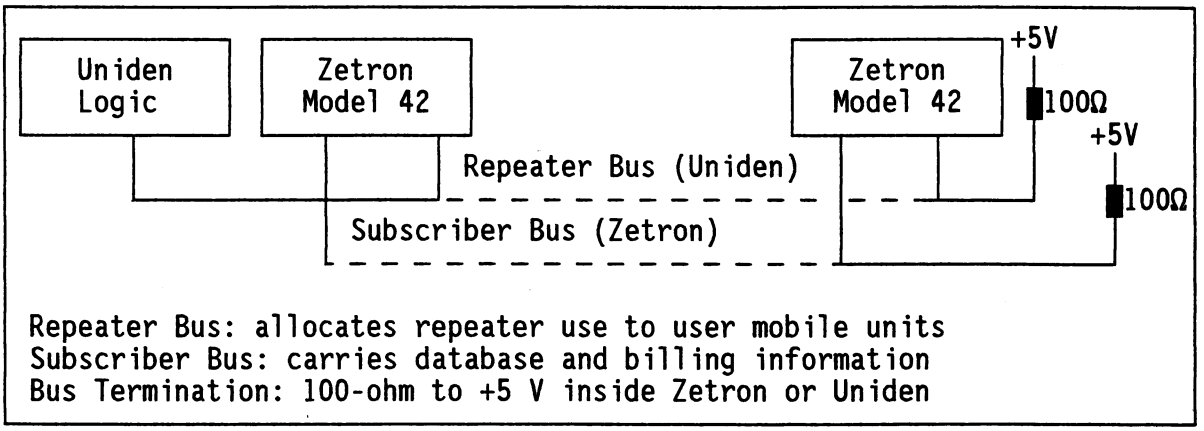

Figure 3-2. Model 42 Trunking Buses (Uniden Compatible)

The subscriber bus is used for communicating database and billing information from one Model 42 or Model 49 to another. When the office computer connects into one Model 42 by modem, it can obtain data from any Model 42 or Model 49 via the subscriber bus.

There is a pair of BNC connectors for each bus on the rear panel of the Model 42, making it easy to daisy-chain the cables. These party-line buses connect logic units together with 50-ohm coaxial shielded cable. On EFJ systems, termination resistors at the ends pull the open-emitter drivers to ground through 100-ohm. On Uniden systems, a 100-ohm resistor (installed inside one of the logic units) on each bus pulls the open-collector drivers to +5 volts.

Note: For proper operation, <u>each</u> bus must have <u>one</u> terminating resistor.

REPEATER BUS OPERATION

This bus is called the high-speed data bus (HDB) on E.F. Johnson systems and the repeater network data link (RNDL) on Uniden systems. The bus is a coaxial cable system and has a time slot for each active repeater on the system to identify which user (home channel + ID) is using that repeater.

If the repeater is available (free), then a home channel of 255 and ID of 255 appears on the bus. One logic unit is designated the bus master and provides the sync pulse necessary for bus operation. Either a Zetron Model 42 or other brand of logic unit can operate as the sync master. If the sync master fails to generate sync pulses at the appropriate time (at least every 35 milliseconds), then the repeater controllers do not trunk, but revert to single channel LTR radio repeaters. As soon as sync reappears, trunking resumes automatically.

Figure 3-3 illustrates the repeater bus timing.

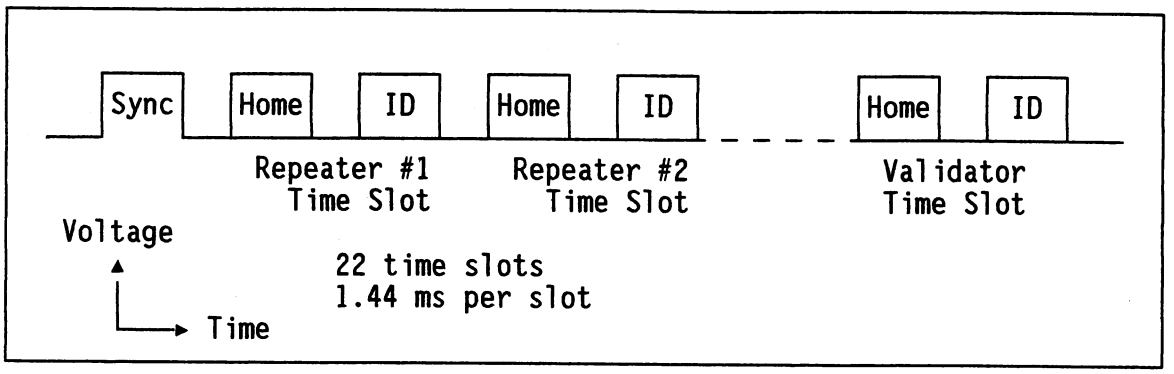

Figure 3-3. Repeater Bus Timing

The sync pulse on the repeater bus notifies all of the logic units when time slot #1 begins. Only one logic unit, designated the "sync master" generates the sync pulse for each bus cycle. A switch setting in each Johnson/Uniden Logic Unit and in each Zetron Model 42 designates whether it generates or looks for sync pulses. Only one unit on each repeater bus should be configured as the sync master to generate sync.

Slot #21 is used to convey user ID validation information on systems with a separate validator box. Slot #22 is not used. If a user ID has been set as invalid, then the active repeater sets a home channel of 21 along with the ID being invalidated in its repeater bus time slot.

The SYNC light on the front of the Model 42 indicates when it is generating/receiving sync depending upon whether it is set as a repeater bus master/slave. Similar SYNC light on Johnson and RCD light on Uniden logic confirm proper repeater bus operation.

SUBSCRIBER BUS OPERATION

This bus carries messages among Zetron Model 42s and Model 49s at the site. The bus provides access to database and billing data of all Model 42s and Model 49s from any one Model 42. The messages carry database information for automatic cloning, air time and detail records for billing data retrieval, and repeater loading data for system use analysis.

The bus is a coaxial cable party-line system where one Model 42 is a "subscriber master" and the others slaves. When the master talks to the slaves, its front panel POLL light is lit steadily and the slave POLL lights flicker quickly. During database cloning, the POLL light flashes every second or so until cloning is complete.

Note: As jumpered in the Model 42, this bus is electrically identical to the repeater bus so that cross connecting the buses will cause no damage. However, just like the repeater bus, the subscriber bus requires its own termination resistor.

USER ID VALIDATION

Many LTR systems operate with no validation system, i.e. any LTR radio that is programmed to the correct frequencies can access the system. With validation, a standard feature of the Zetron Model 42, only those designated user IDs are permitted system access. If an invalidated user ID attempts access, the logic unit for that channel sends a "turn-off" message to the mobile, causing the mobile radio to squelch. If the mobile is half-duplex, it won't hear the "turnoff" packet until it stops transmitting.

The validation system in the Model 42 is very flexible. Depending upon the settings of the Validate and Sync switches, the Model 42 can validate its own users (internal validation), look for validation information from a system validator on the repeater bus (external validation), or generate validation information for other logic units (validator function). Refer to Section 4 (Trunking Connections in Detail subsection, checklist item 10) for setting up the validation system.

When the Model 42 is performing validation on other logic units, it will only tell the other logic units whether or not an ID is valid. Therefore, the ID's capability is determined by the channel that the call is being made on. This is true for a trunked or homed call. When using Uniden or EFJ logic, the IDs are programmed on a block approach. The preceding facts make it necessary that all channels be programmed in identical increments. This is true even in the Zetron channel.

Example:

Model 42
Chan.
1

IDs 1 - 100 Dispatch capable
IDs 101 - 150 Interconnect with only local capability
IDs 151 - 250 Interconnect with long distance capability

EFJ
Chan.
2

IDs 1 - 100 Dispatch capable
IDs 101-150 Interconnect with only local capability
IDs 151-250 Interconnect with long distance capability

TRUNKING DATA PACKETS

A mobile radio is normally tuned to its "home" channel, listening for data packets from its home repeater. These data packets (see Figure 3-4) tell the radios which repeater is available for use and whether any mobile or telephone party is calling them.

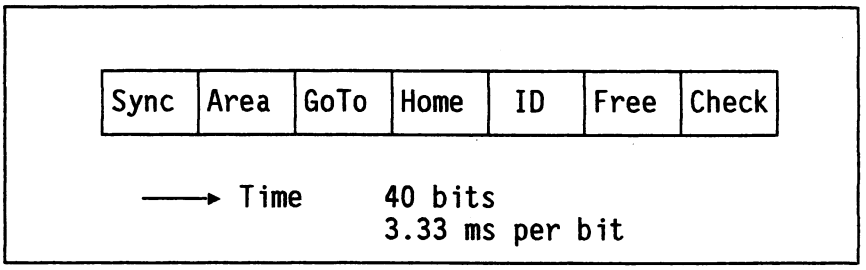

Figure 3-4. LTR Data Packet Format

If all channels are busy, then a "free" repeater number of 0 is sent by the logic unit. If the home repeater is free, the logic unit sets "Go To=Home" and sends idle packets at regular intervals to keep mobiles updated, typically every 10 seconds.

The Check field guarantees accurate communication of data between the logic units and the mobiles. Packets in error are discarded.

4. MODEL 42 SETUP

Overview 4-1

Installation checklist 4-3
- Step 1: Setting the Jumpers 4-4
- Step 2: Clearing memory 4-9
- Step 3: Setting DIP switches 4-11
- Step 4: Installing and modifying the repeater 4-12
- Step 5: Setting repeater levels 4-59
- Step 5A: Setting repeater levels for V2+ firmware 4-62
- Step 6: Making trunking connections 4-65
- Step 7: Testing dispatch calls 4-66
- Step 8: Testing trunking 4-67
- Step 9: Programming users and time 4-68

Trunking connections in detail 4-69

Hardware layout 4-72

Model 42 installation worksheet 4-75

LTR site configuration worksheet 4-76

4. MODEL 42 SETUP

OVERVIEW

The Model 42 is designed with a heavy-duty face plate that has holes to accommodate standard 19-inch rack mounting. Each Model 42 uses one standard rack space.

The current draw of the Model 42 is approximately 400 mA, with the heater option 1.2 A. Generally, sufficient spare +12 VDC power is available from the radio repeater to power the Model 42. Note: DC input power must be at least +10.5 VDC for proper Model 42 operation.

The following equipment is recommended to make installation and programming easy:

Equipment	Purpose
Tool kit with screwdrivers	Mechanical assembly
Comm. monitor with deviation meter	Adjusting RX and TX levels
Voltmeter	Adjusting RX and TX audio levels
Trunking radio	Adjusting RX and TX data levels
LTR encoder, decoder	Adjusting RX and TX data levels
Model 42 Trunking Repeater Manager	System component
Radio repeater	System component
Cable from repeater to Model 42	System component
BNC cables between all logic units	System component
IBM compatible PC (w/ Hayes modem)	Program site, repeater, user IDs
Multibase	System component
RS-232 cable from computer to Model 42	Programming connection
A Hayes Compatible Modem	Programming connection

We recommend that you allot sufficient time in your radio shop to become familiar with the Model 42 and to set up and operate your first Zetron controlled repeater there, before traveling to the repeater site. Although the Model 42 is a small unit, its comprehensive capabilities will require time to adjust it, to program its database, and to become familiar with its operation. Applications engineers at Zetron are available by telephone to assist you in your installation.

> NOTICE
> This equipment generates, uses, and can radiate radio frequency energy; and if not installed and used in accordance with the instruction manual, may cause interference to radio communications. Installation should be accomplished by personnel with experience in radio trunking systems.

All adjustment pots and DIP switches are accessible through the front panel cover and are accessible without removing the top cover from the unit.

Most of the status display LEDs are immediately visible from the front panel. The exceptions are the LTR Protocol ASIC status outputs:

DS1;	("Qual")	Indicates a received data packet has been qualified as valid (this does *not* indicate a valid USER ID).
DS2;	("TX")	Indicates LTR data packet transmitted.
DS3;	("RX")	Indicates LTR data [packet] received.

These three indicators are located in front of P1, and are only of interest during level setting and troubleshooting procedures. Removal of the top cover is necessary to view these LEDs.

INSTALLATION CHECKLIST

Start with the unit in your shop and complete the following steps, which are described in detail in the remainder of this secton:

[] Step 1: Set jumpers for data bus. Unique repeater jumper configurations are listed in Step 4.

[] Step 2: Clear memory.

[] Step 3: Set dip switches.

[] Step 4: Modify and install repeater.
A list of repeaters is given on the first page of this step.

[] Step 5: Set repeater levels for V1+ firmware.

[] Step 5A: Set repeater levels for V2+ firmware.

[] Step 6: Make trunking connections.

[] Step 7: Test dispatch calls.

[] Step 8: Test trunking.

[] Step 9: Program users and time.

Once your system is operating well in your shop, record the equipment settings and any pertinent notes on the worksheets at the end of this section. Keep these worksheets for future reference; they will ease future installation of additional Zetron units.

WARNING

To protect this equipment against high voltage surges induced by lightning, care must be taken to observe proper grounding practices for both the radio and telephone transmission systems. Installation should be accomplished by personnel with experience in radio-telephone equipment. Consequent damage due to failure to provide adequate protection is not covered under Zetron's warranty.

Step 1: Setting the Jumpers

[]1. Remove the Model 42 top cover.

[]2. Set repeater bus compatibility jumpers. See Figure 4-1 for the location of the main board jumpers.

The Subscriber bus is used for the programming, SMDR, and call accumulation of Zetron units *only*. The Repeater bus is used for trunking and loading information that all logic units need. These buses must be connected and terminated properly for correct operation.

While the Model 42 can work properly with any equipment, Uniden and EFJ *logic* units cannot coexist in any one system. If the Model 42 is in a system with Uniden logic, pick Uniden logic from below. If the Model 42 is in a system with EFJ logic, pick EFJ logic from below. If the Model 42s are the only logic in the system, either Uniden or EFJ logic will work properly.

Uniden logic:

JP18	B=Uniden RNDL Repeater Bus Timing
JP16,14	B=Uniden Subscriber Bus hardware
JP15,17	B=Uniden Repeater Bus hardware
*JP12	B=Uniden 100 ohm pull-up Subscriber Bus termination
*JP13	B=Uniden 100 ohm pull-up Repeater Bus termination

EFJ logic:

JP18	A=EFJ HDB Repeater Bus timing
JP16,14	A=EFJ Subscriber Bus hardware
JP15,17	A=EFJ Repeater Bus hardware
*JP12	A=EFJ 100 ohm pull-down Subscriber Bus termination
*JP13	A=EFJ 100 ohm pull-down Repeater Bus termination

* For either type of logic there should only be 1 pull up or down resistor on the Subscriber or Repeater bus. Because of this it is necessary on all other logic units to remove any termination. This is done on the Model 42 by placing JP12 (Subsc Bus) and JP13 (Rptr Bus) in the C position.

  We recommend placing the termination-resistor jumper for each data bus into the "Master" logic unit for that bus. This will ease service since the exact location of the termination for each bus will be known. Set all bus "Slave" unit terminations to "C".

  See "Trunking Connections in Detail" later in this section for a detailed explanation of trunking operations and connections.

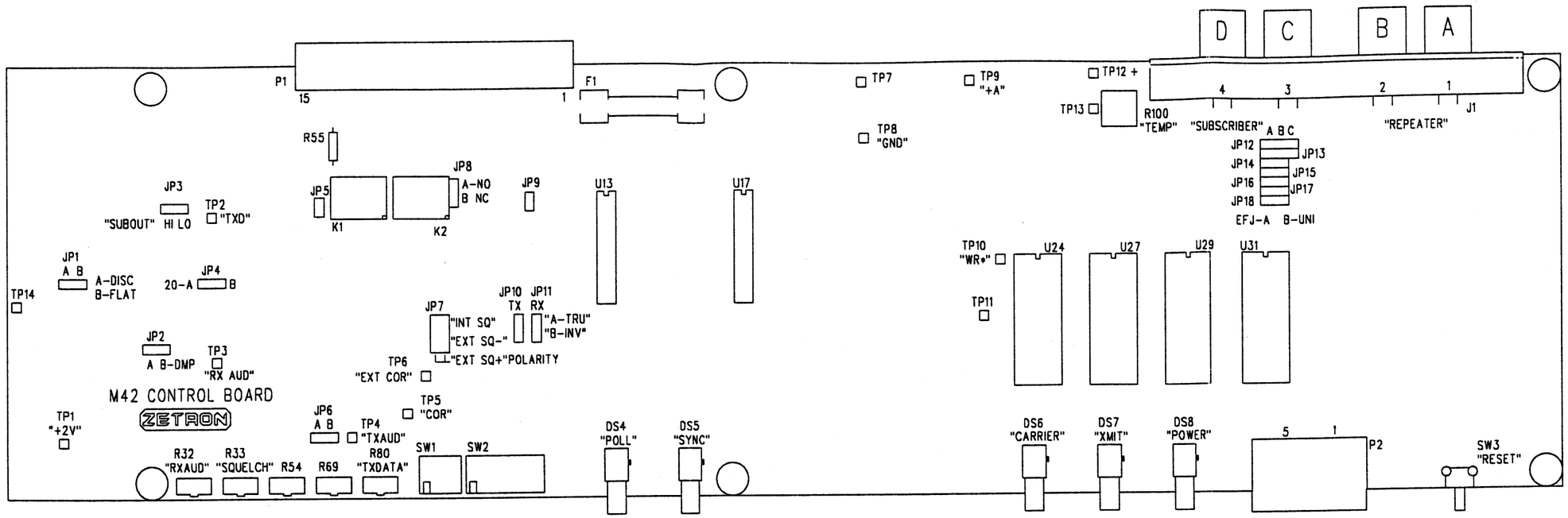

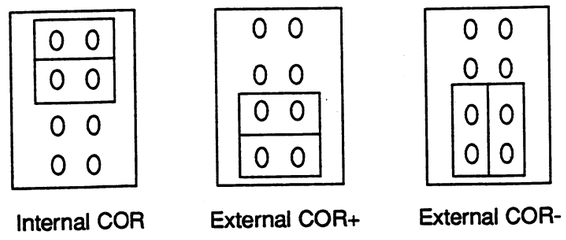

024-0128A

Figure 4-1. Main Board Jumpers

[]3. Set repeater Configuration Jumpers.

Refer to the repeater instructions in Step 4 for the repeater that will be interfaced with the Model 42, or refer to the following jumper tables.

[]4. Set Cross-busy Jumpers.

The cross-busy features have relay outputs that can be normally open (N.O.) or normally closed (N.C.). The corresponding jumpers are as follows:

Cross-busy (CTL-1)
JP3 A = N.O.
B = N.C.

[]5. Fill in the blank Model 42 Jumper Table (Literature No. 005-0903), which was included with your order. Record the jumper settings for your specific installation site and repeaters and display the filled-in jumper table at your site for service personnel.

M42 Jumper Table

Repeater Model	Main Board Jumper Number																			Notes
	1	2	3	4	5	6	7	8	9	10	11	12	13	14	15	16	17	18	R55	
Daniels Electronics	A	B	A	B	--	A	A		--	B	A	C	*	C	*	*	*	*	*	*	Out	
E.F. Johnson 8600	A	B	A	A	--	A	A		--	A	A	C	*	C	*	*	*	*	*	*	Out	
Kenwood TKR-900	A	B	A	A	--	A	A		--	A	A	C	*	C	*	*	*	*	*	*	IN	
Midland LMR	A	B	B	A	--	A	A		--	B	A	C	*	C	*	*	*	*	*	*	Out	
Motorola Micor	A	B	A	A	--	A	A		--	A	B	C	*	C	*	*	*	*	*	*	Out	
Relm 800 MHz	A	A	A	A	--	A	A		--	A	B	C	*	C	*	*	*	*	*	*	Out	
SEA 220 MHz	--	A	--	B	--	--	C		--	--	--	C	*	C	*	*	*	*	*	*	IN	
Standard RP70K	A	B	A	A	--	B	A		--	B	B	C	*	C	*	*	*	*	*	*	IN	
Standard RPT-38	A	B	A	B	--	A	A		--	A	B	C	*	C	*	*	*	*	*	*	Out	
Tait	A	B	A	B	--	A	A		--	A	B	C	*	C	*	*	*	*	*	*	Out	
Uniden MRS 804	A	B	A	A	--	A	A		--	A	B	C	*	C	*	*	*	*	*	*	Out	
Uniden MRS 802	A	B	A	A	--	A	A		--	A	B	C	*	C	*	*	*	*	*	*	Out	
*Uniden Logic												C	B	C	B	B	B	B	B	B		
*EFJ Logic												C	A	C	A	A	A	A	A	A		
Functional Descriptions	Tx Audio to Radio: A = Disc, B= Flat	Tx Tone: A= Flat; B = De-emph.	SUBOUT Level: A = High; B = Low	Radio Rx Amp: A = High; B = Low	PTT Drive; OUT = Relay; IN = Trans.	Radio Tx Amp: A = High; B = Low	COR Drive: A = ISQ; B = EXT-; C = EXT+	Alarm 1 (X-BSY) : A = N.O.; B = N.C.	Reset (Active = IN) Normally Out	Tx Polarity; A = Normal; B = Invert	Rx Data Polarity: A = Normal; B = Invert	*Subsc. Bus Termination: C=None Slave (Poll Lamp) A= EFJ; B= Uniden Master	Rptr. Bus Termination: C= None Slave (Sync. Lamp) A= EFJ; B= Uniden Master	EFJ/Uniden : A = EFJ; B = Uniden	EFJ/Uniden : A = EFJ; B = Uniden	EFJ/Uniden : A = EFJ; B = Uniden	EFJ/Uniden : A = EFJ; B = Uniden	EFJ/Uniden : A = EFJ; B = Uniden	SUBOUT Coupling: IN = DC; Out = AC	

Notes:
N.O. = Normally Open

N.C. = Normally Closed

H.P.F. = High Pass Filter

The following table summarizes the Model 42 jumper settings.

Jumper Name	Label	A Setting	B Setting	C Setting
Radio TX Audio	JP1	__ Discriminator	__ Flat	
TX Tone	JP2	__ Flat	__ De-emphasis	
TX Data Level	JP3	__ High	__ Low	
Repeater RX gain	JP4	__ 20 dB	__ 0 dB	
PTT	JP5	__ Out=Relay	__ In=Transistor (not installed)	
Repeater TX audio	JP6	__ High	__ Low	
COR (see detail)	JP7	__ Internal	__ External pos.	__ External neg.
CTL1	JP8	__ N.O.	__ N.C.	
Reset	JP9	__ Out=Run	__ In=Reset (not installed)	
RX Data Polarity	JP10	__ True	__ Invert	
TX Data Polarity	JP11	__ True	__ Invert	
Subs bus Resistor	JP12	__ EFJ 100Ω	__ Uniden 100Ω	__ No resistor
Rptr bus Resistor	JP13	__ EFJ 100Ω	__ Uniden 100Ω	__ No resistor
EFJ/Uniden bus	JP14-18	__ Johnson	__ Uniden	

Step 2: Clearing Memory

HARD RESET
When you install the Model 42 for the first time, move the unit from one channel to another, or put a spare unit into service, it is important to guarantee that all database and billing information is cleared. To do this, perform the following steps:

> CAUTION
> A hard reset will result in the loss of the Air Time Accumulator Record data from the Model 42 memory. Retrieve this data before executing a hard reset.

[]1. Power on the Model 42 and wait about 5 seconds for the front panel lights to stabilize.

[]2. Set all the front panel DIP switches to the DOWN position.

[]3. Press and release the front panel the Connect/Disconnect button four times. The rate at which you press the button is important. To get an idea as to how quickly, read the following out loud:

Press...Release...Press...Release...Press...Release...Press...Release

After you release the button for the second time, the POLL and SYNC LEDs flash briefly. On the third press and release, these LEDs will stay on. On the fourth press and release, the LEDs will go out. This is your indication that the Model 42 has successfully cleared all of its memory to factory settings.

[]4. Set all the front panel DIP switches back to their operating positions.

[]5. Press the Connect/Disconnect button twice. You will see the POLL and SYNC lights come on and then go off. Press the Connect/Disconnect button twice again. The five lights will flash briefly. The Model 42 has read the front panel switches.

SOFT RESET

Unlike the full database hard reset, the soft reset will not alter the Air Time Accumulators. The main purpose of the soft reset is to "read" the front panel DIP switches. We also recommend that you do a soft reset after removing or installing either the repeater or subscriber bus cables.

Every time you change a switch setting you must make the Model 42 read the new settings. You can cycle the power off then on, or you can do the following:

[]1. Wait until no radio traffic is busy on the repeater.

[]2. Press and release the CONNECT/DISCONNECT button twice.

- OR -

Press and hold the CONNECT/DISCONNECT button (approximately two seconds) until...

The POLL and SYNC LEDs flash briefly. If you don't see the lights flash, try pressing the button again.

Step 3: Setting DIP Switches

The DIP switches (accessible through the front panel cover) make it easy for you to set the Model 42 for multi-channel trunking without programming PROMS! There are two switches; the 4-position one on the left is called A, and the 8-position one is called B. Refer to "Hardware Layout" later in this section for diagrams of these switches.

Switch A:1 should be in the Down position for normal operation. The Up position is used for activating test modes for alignment.

Switch A:2 selects repeater data bus validation. The Down position causes the Model 42 to validate from its internal database *and* from the Repeater Bus time slot 21. The Up position validates to or from slot 21 of the Repeater Bus, dependant upon whether the Model 42 is master or slave.

Switches A:3 and A:4 set the communications speed between the Model 42 front panel RS-232 connector and a computer. The Baud Rate is selectable between 300, 1200, 2400, or 4800 Bits per Second.

Switch B:1 sets up the Model 42 for communication on the Subscriber Bus used for database cloning and billing data retrieval. The subscriber bus is only used between Zetron units, and only one Zetron unit should be set with this switch Up (bus master unit). Other units (slaves) should have this switch set Down. Standalone units should be configured as "master" for proper operation.

Switch B:2 sets up the Model 42 for communication on the Repeater Bus used for trunking with other channels. The repeater bus is used by all the logic units. Only one logic unit should be set as Bus Master (this switch Up on the Model 42). Other units have to be set as slaves (this switch Down on the Model 42). Standalone units should be configured as "master" for proper operation.

Switch B:3 selects the LTR Area being controlled by your trunking system. The setting of this switch must agree with your other logic units and with the programming of all of your mobiles. Set this switch Up for Area 1, and Down for Area 0.

Five switches, B:4 through B:8, select the Repeater channel number being controlled by your Model 42. Your mobiles are programmed with F.C.C. RF channels that correspond to certain repeater numbers. These assigned repeater numbers determine the switch settings of each Model 49. Most repeater numbering systems evenly space the repeater numbers (although this is not critical). A 5-channel system usually has repeaters 1, 5, 9, 13, 17; a 10-channel system has repeaters 1, 3, 5, 7, 9, 11, 13, 15, 17, 19. These switches are coded in binary with the least significant bit on the right (B:8). Refer to "Hardware Layout" later in this section for diagrams of these switches.

Note: Changing the switch settings requires a soft reset before the switches are read.

Step 4: Installing and Modifying the Repeater

Select the appropriate repeater from the list below and follow the corresponding modification and installation procedure.

A. Daniels Electronics

B. E.F. Johnson

C. Kenwood

D. Midland LMR

E. Motorola Micor

F1. New Relm
F2. Old Relm

G. SEA 220 MHz

H1. Standard RP70K
H2. Standard RPT-38

J1. Tait 8xx Series Rackframe
J2. Tait 8xx Series Slimline

K1. Uniden MRS804
K2. Uniden MRS802

If you are using a repeater not listed, contact a Zetron Mobile Systems Division Applications Engineer at (206) 820-6363.

A. DANIELS ELECTRONICS LOW POWER MT-3 REPEATER

[]1. Verify proper data bus configurations have been set per Step 1.2.

JP18	bus type
JP14-17	bus polarities
JP12,13	terminations

[]2. Be sure that the Model 42 repeater interface jumpers are set correctly per the following:

JP1	A=TX discriminator audio
JP2	B=Tx de-emphasized Tone audio
JP3	A=SUBOUT Tx HI level
JP4	B=RX amp 0 dB gain
JP6	A=TX amp high range
JP7	A=COR from INTernal noise squelch
JP10	B=Invert Tx LTR Data polarity
JP11	A=True Rx LTR Data polarity
R55	CUT=AC coupled SUBOUT data

[]3. Verify Alarm and Cross-Busy jumper settings per Step 1.4.

JP8	A or B:Cross-Busy Output (JP7 may change if using cross-busy)

NOTE 1: These jumper positions have been found to operate properly with slight modifications of the repeater, as performed by the repeater manufacturer.

NOTE 2: The Model 42 may be modified for reduced power consumption if desired. Details are provided in Section 8.

[]4. Connect the Model 42 to the Daniels MT-3 Repeater using the Daniels Auxiliary Control interface cable and Figure 4-2. Be careful to reference the correct rackframe slots (A or B) for the transmitter module and receiver module applicable for your installation.

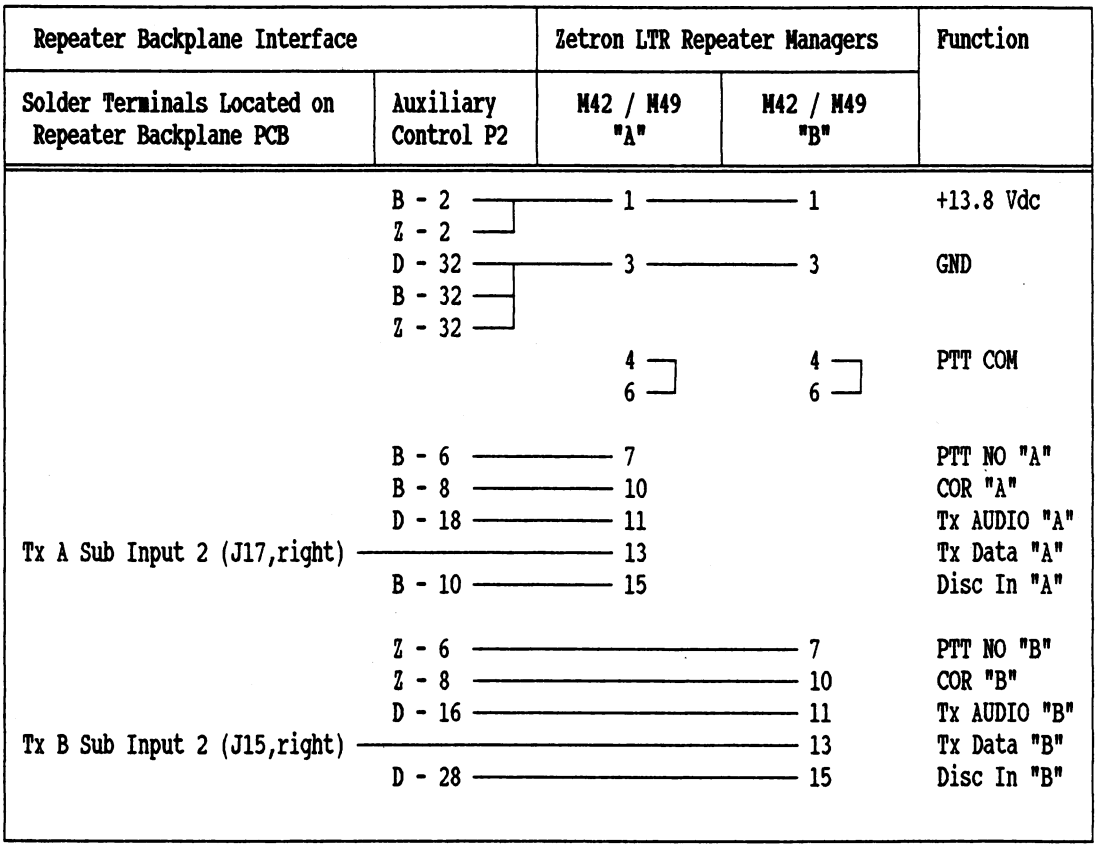

Figure 4-2. Model 42 Interface Cabling to Daniels MT-3 Repeater

[]5. Verify the Daniels MT-3 hardware configuration as listed below:

Receiver

Replace C48 (1 μF Nonpolar) with 10 μF Tantalum Electrolytic capacitor (16V), oriented with negative (-) lead toward TP9. Nonpolar would be best.

JU5 Installed (solder bridged)

Transmitter

Replace the following transmitter module components:

MT-3 Audio Processing Board:

C40 (330 nF) changed to 10 μF, (-) toward R44. (J16 out)

MT-3 800 MHz Synthesizer:

Install Solder bead for JU2.
R11 (2.80 KΩ) changed to 10 KΩ
R12 (2.37 KΩ) changed to 33.2 KΩ
C10 (470 nF) changed to 33 nF
C11 (2.2 μF) changed to 220 nF
C14 (33 nF) changed to 2.2 nF

MT-3 800 MHz Tx Module Main Board:

Connect JA4-2 (Subtone #2 Output) to JS1-18 (Spare Synth I/O), using shielded coaxial cable
J6 Installed (solder bridged)

[]5. Proceed to "Step 5: Set Repeater Levels" or "Step 5A: Set Repeater Levels for V2+ Firmware".

B. E.F. JOHNSON REPEATER

[]1. Verify proper data bus configurations have been set per Step 1.2.

JP18	bus type
JP14-17	bus polarities
JP12,13	terminations

[]2. Be sure that the Model 42 repeater interface jumpers are set correctly per the following:

JP1	A=TX discriminator audio
JP2	B=Tx de-emphasized Tone audio
JP3	A=SUBOUT Tx HI level
JP4	A=RX amp 20 dB gain
JP6	A=TX amp high range
JP7	A=COR from INTernal noise squelch
JP10	A=True TX data polarity
JP11	A=True RX data polarity
R55	CUT=AC coupled SUBOUT data

[]3. Verify Alarm and Cross-Busy jumper settings per Step 1.4.

JP3	Cross-Busy Output (JP7 may change if using cross-busy)

NOTE: These jumper positions have been found to operate properly with the factory default settings of the repeater. However, the settings of these repeaters may have been changed in the field or elsewhere. Therefore, some of these jumper positions may need to be changed to obtain proper operating levels.

Perform the following modifications to your EFJ repeater:

[]4. Remove the E.F. Johnson Logic Unit, RIC, and cabling harness from the repeater cabinet.

[]5. Remove the slide brackets from the EFJ Logic Unit and attach them to the Model 42.

[]6. Mount the Model 42 into the EFJ repeater cabinet.

[]7. Attach the Zetron Cable Harness (P/N 709-7117) to the Model 42, EFJ Exciter, EFJ Receiver, and EFJ power supply. Note that each connector is marked. Refer to Figure 4-3 for the wiring diagram.

[]8. Proceed to "Step 5: Set Repeater Levels" or "Step 5A: Set Repeater Levels for V2+ Firmware".

Note: You can record your settings on the worksheets at the end of this section.

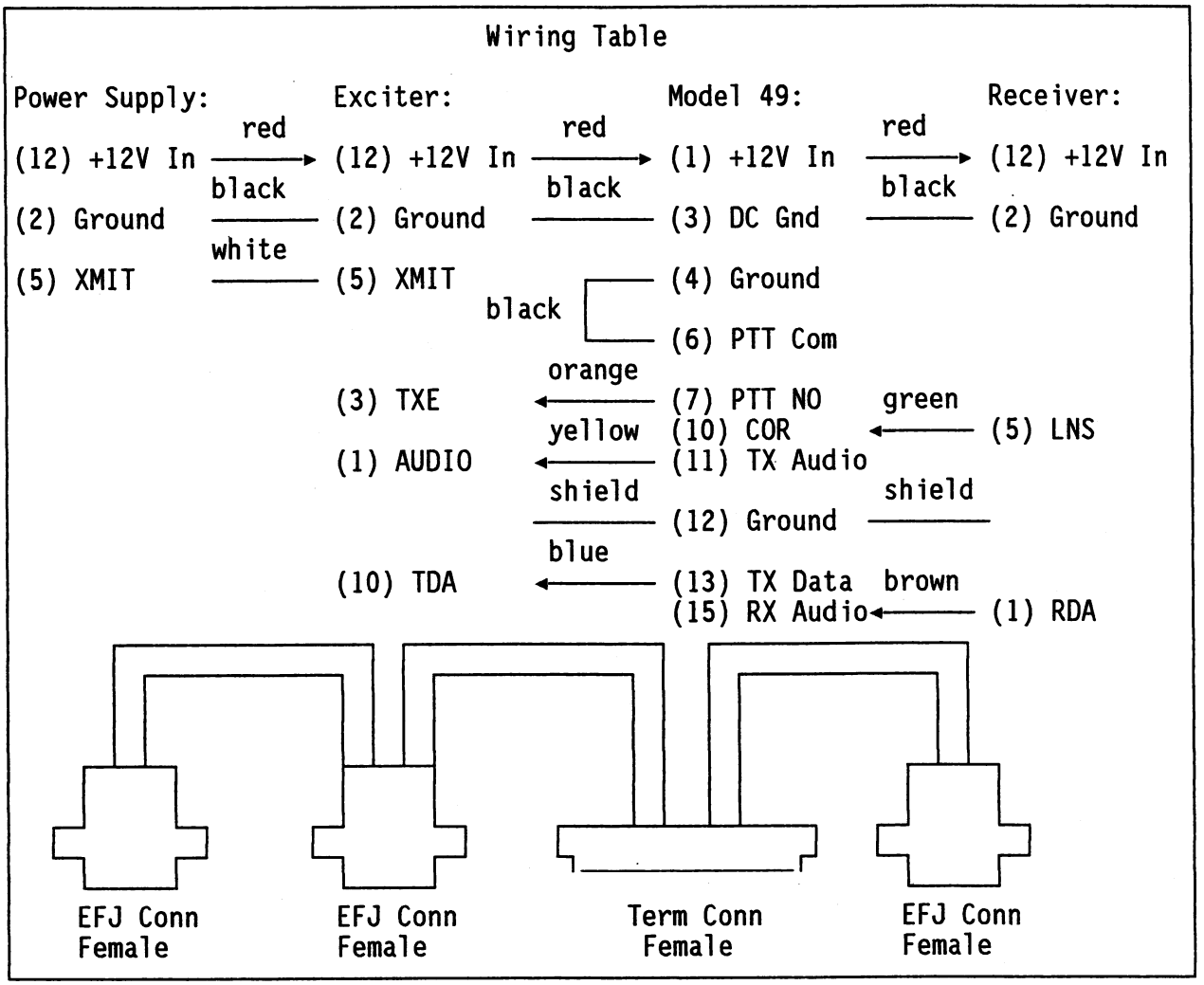

Figure 4-3. Model 42 to E.F. Johnson 800 MHz Repeater Cable (P/N 709-7117)

C. KENWOOD TKR-900 REPEATER

[]1. Remove the six (6) screws which secure the top cover of the repeater, then remove the cover.

[]2. Verify proper data bus configurations have been set per Step 1.2.

JP18	bus type
JP14-17	bus polarities
JP12,13	terminations

[]3. Be sure that the Model 42 repeater interface jumpers are set correctly per the following:

JP1	A=TX discriminator audio
JP2	B=Tx Audio De-emphasis
JP3	A=SUBOUT Tx HI level
JP4	A=RX amp 20 dB gain
JP6	A=TX amp high range
JP7	A=INT; COR from internal noise squelch
JP10	A=True RX Data polarity
JP11	A=True TX Data polarity
R55	IN=DC coupled data

Note: If noise peaks greater than 2 Vpp above 4KHz are not present at J1-15 (Disc In) of the Model 42, then the internal squelch circuitry may not function properly. In that case, JP7 may need to be configured for EXTernal COR control (EXT+: 5-6, 7-8 OR EXT-: 5-7, 6-8).

[]4. Verify Alarm and Cross-Busy jumper settings per Step 1.4.

JP3	Cross-Busy Output

[]5. Set the front panel controls as follow:

VOLUME:	Any position (receiver level to Zetron Model 42 is independent)

[]6. Connect the Model 42 to the TKR-900 Logic Interface connector (J304) with the Generic repeater cable (709-7116) as shown in Figure 4-4.

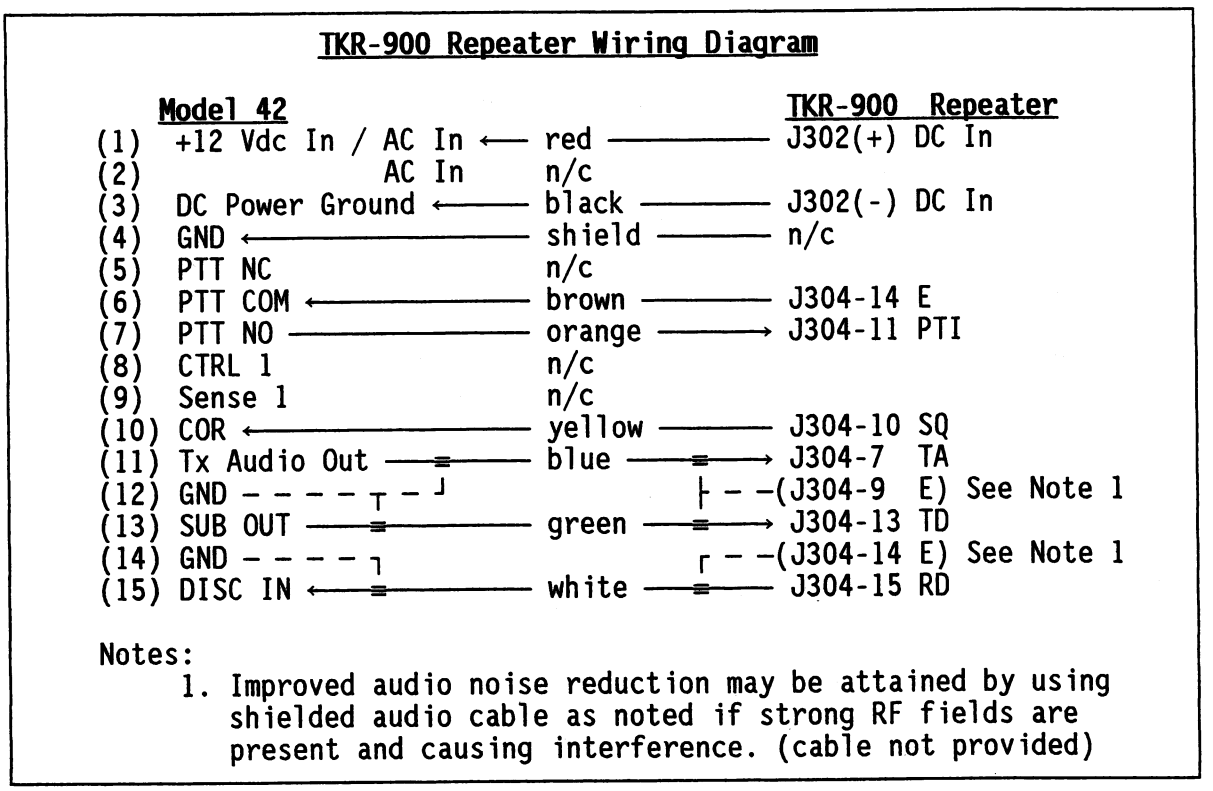

Figure 4-4. Model 42 Generic Cable (709-7116) to Kenwood Repeater

[]7. Remove the six (6) screws holding the cover onto the receiver module (X55-3020-10) of the repeater. Remove the cover.

[]8. Locate VR2 (Rx Detector Signal Level) and turn fully clockwise to open the squelch for proper Model 42 operation.

[]9. Replace the cover onto the receive module, firmly securing all screws.

[]10. Replace the repeater cover, firmly securing all screws.

[]11. Proceed to "Step 5: Set Repeater Levels" or "Step 5A: Set Repeater Levels for V2+ Firmware".

D. MIDLAND LMR REPEATER

This interface configuration pertains Model 42 controller hardware interfaced with Midland LMR series 800 MHz repeaters.

[]1. Verify proper data bus configurations have been set per Step 1.2.

JP18	bus type
JP14-17	bus polarities
JP12,13	terminations

[]2. Be sure that the Model 42 repeater interface jumpers are set correctly per the following:

JP1	A=TX discriminator audio
JP2	B=Tx de-emphasized Tone audio
JP3	B=SUBOUT Tx Low level
JP4	A=RX amp 20 dB gain
JP6	A=TX amp high range
JP7	A=COR from internal noise squelch
JP10	B=Invert TX data polarity
JP11	A=True RX data polarity
R55	CUT=AC coupled SUBOUT data

[]3. Verify Alarm and Cross-Busy jumper settings per Step 1.4.

JP3	Cross-Busy Output (JP7 may change if using cross-busy)

NOTE: These jumper positions have been found to operate properly with the factory default settings of the repeater. However, the settings of these repeaters may have been changed in the field or elsewhere. Therefore, some of these jumper positions may need to be changed to obtain proper operating levels.

[]4. Connect the Model 42 to the LMR repeater using the Generic interface cable (Zetron p/n 709-7116) and Figure 4-5.

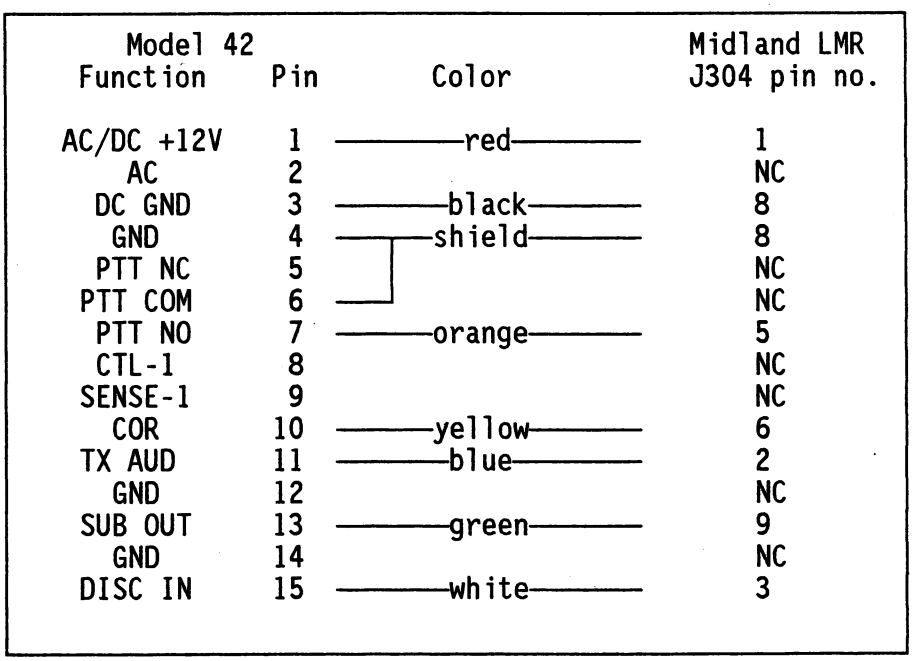

Figure 4-5. Model 42 to Motorola Micor Repeater Cable (P/N 709-7116)

[]5. Proceed to "Step 5: Set Repeater Levels" or "Step 5A: Set Repeater Levels for V2+ Firmware".

E. MOTOROLA MICOR REPEATER

Motorola MICOR Repeaters are optionally equipped with one of three backplane boards:

Unified Remote Control Chassis (TCN1148A, TCN1187A, TCN1190A)
TCN1107A Remote Control Chassis
TCN1125A Remote Control Chassis

This interface configuration pertains to the Unified Remote Control Chassis only; use of the other two types are possible, but not described herein. Please contact Zetron Mobile Systems Division, Applications Department for notes concerning either of the latter types of chassis listed above.

[]1. Verify proper data bus configurations have been set per Step 1.2.

JP18	bus type
JP14-17	bus polarities
JP12,13	terminations

[]2. Be sure that the Model 49 repeater interface jumpers are set correctly per the following:

JP1	A=TX discriminator audio
JP2	B=TX de-emphasized Tone audio
JP3	A=SUBOUT Tx HI level
JP4	A=RX amp 20 dB gain
JP6	A=TX amp high range
JP7	A=COR from internal noise squelch
JP10	A=True TX data polarity
JP11	B=Invert RX data polarity
R55	CUT=AC coupled SUBOUT data

[]3. Verify Alarm and Cross-Busy jumper settings per Step 1.4.

JP3	Cross-Busy Output (JP7 may change if using cross-busy)

NOTE: These jumper positions have been found to operate properly with the factory default settings of the repeater. However, the settings of these repeaters may have been changed in the field or elsewhere. Therefore, some of these jumper positions may need to be changed to obtain proper operating levels.

[]4 Remove all modules except the Station Control and Squelch Gate modules.

[]5. Connect the Model 42 to the Motorola Repeater using the Zetron Generic Repeater Interface Cable (part #709-7116). Refer to Figure 4-6 for cable wiring.

[]6. Remove CR12 in the Station Control module.

[]7. Install JU1 on the Unified Chassis to bypass F1 PL Module processing of the Tx Audio signal.

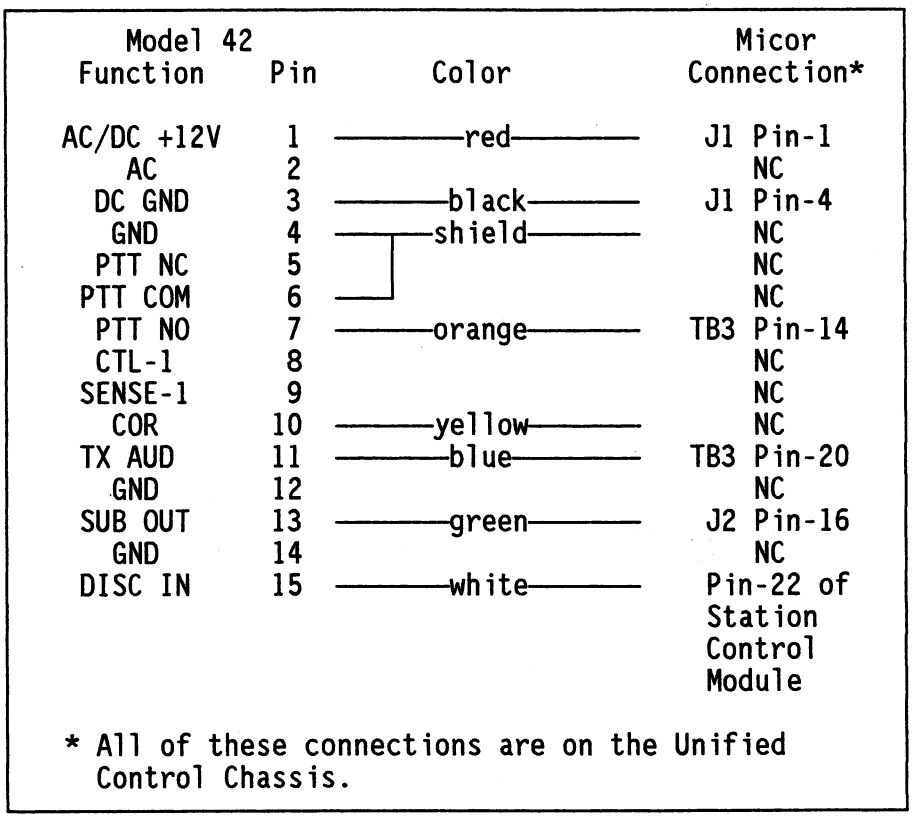

Figure 4-6. Model 42 to Motorola Micor Repeater Cable (P/N 709-7116)

[]8. Remove J12 in the Squelch Gate module to disable the RPTR PTT output from the Squelch Gate Module.

[]9. Set up the squelch gate module jumpers for a base station.

[]10. Connect a jumper wire at the Model 42 end of the cable between pins four and six.

[]10. Proceed to "Step 5: Set Repeater Levels" or "Step 5A: Set Repeater Levels for V2+ Firmware".

F.1 RELM 800-MHZ REPEATER, NEW VERSION

This newest revision of Relm WS20RD Repeaters has been marketed since November of 1993. Refer to the note below for identification.

[]1. Remove the top cover of the Relm Repeater.

* * * * * * * * * * * * * * * N O T E * * * * * * * * * * * * * * *

These instructions pertain to the WS20RD 800 MHz Repeaters shipped from Relm equipped with WHZ38A wiring kits (AKA "Whiz Kits"), commencing from November 1993.

These units may be identified when the top cover is removed by the absence of the piggy-back comparator board which resided in the transmitter cavity of earlier version repeaters.

* *

[]2. Verify proper data bus configurations have been set per Step 1.2.

JP18	bus type
JP14-17	bus polarities
JP12,13	terminations

[]3. Be sure that the Model 42 repeater interface jumpers are set correctly per the following:

JP1	A=TX discriminator audio
JP2	A=TX Flat Tone audio
JP3	A=SUBOUT Tx HI level
JP4	A=RX amp 20 dB gain
JP6	A=TX amp high range
JP7	A=COR from INTernal noise squelch
JP10	A=True TX data polarity
JP11	B=Invert RX data polarity
R55	CUT=AC coupled SUBOUT data

[]4. Verify Alarm and Cross-Busy jumper settings per Step 1.4.

JP3	Cross-Busy Output (JP7 may change if using cross-busy)

NOTE: These jumper positions have been found to operate properly with the factory default settings of the repeater. However, the settings of these repeaters may have been changed in the field or elsewhere. Therefore, some of these jumper positions may need to be changed to obtain proper operating levels.

[]5. Set the front panel controls as follow:

VOLUME:	Any position (receiver level to Zetron Model 49 is independent)
SQUELCH:	Any position (Model 49 squelching is independent)
REPEAT/LOCAL:	Put switch into IN (repeat) position

[]6. Connect the Model 42 to the Relm bulkhead connector with the NEW RELM / REGENCY repeater cable (709-7279) as shown in Figures 4-7 and 4-8.

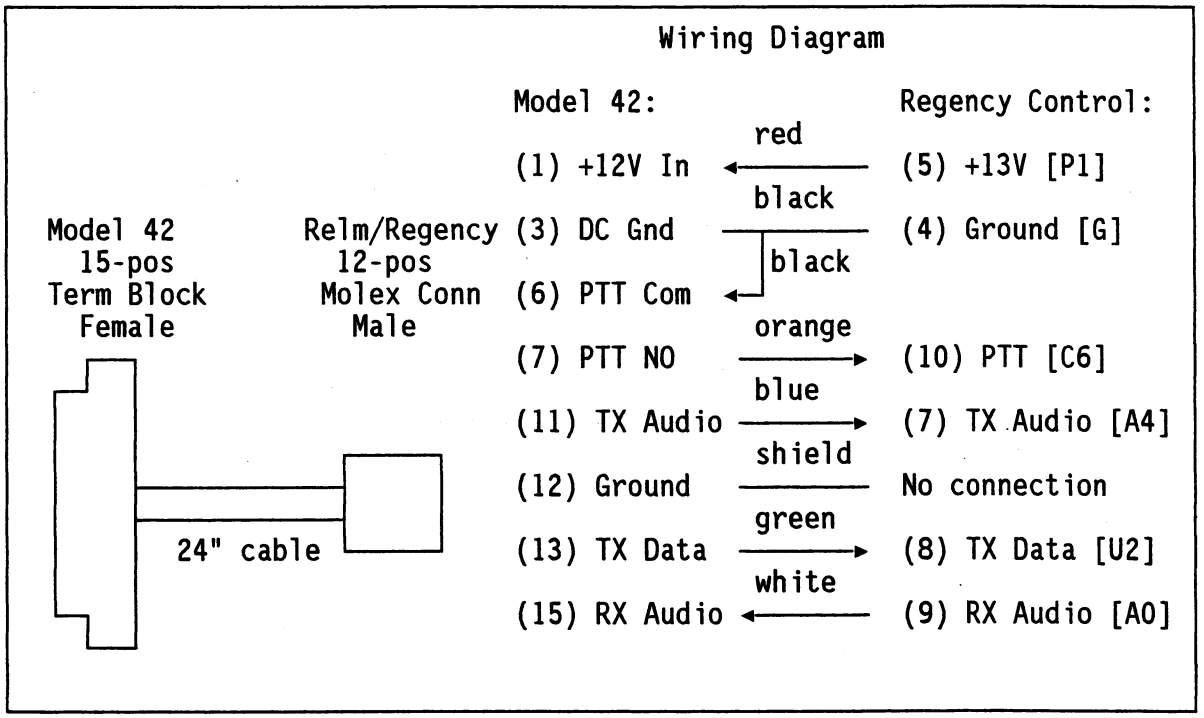

Figure 4-7. Model 42 to New Relm/Regency Repeater Cable (P/N 709-7279)

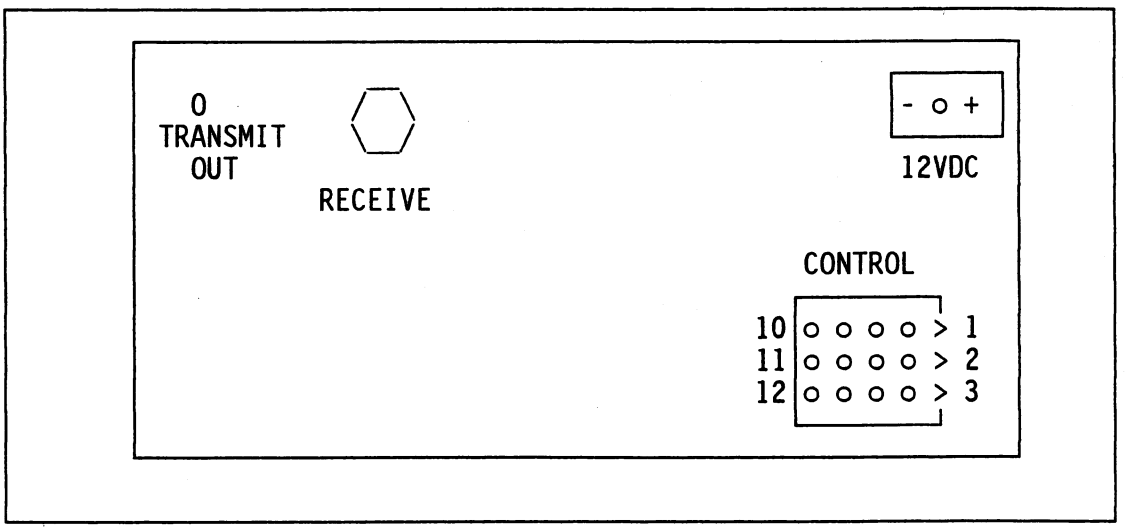

Figure 4-8. Relm/Regency Rear Panel

[]7. Repeater Adjustments:

Transmit Level Adjustments

[]a. Put Model 42 into Test mode: put SW1-1 up, press and hold the connect/disconnect button about 2 seconds, or until the front panel lights flash and go off. Then release the button. The Model 42 should boot up transmitting data and ring bursts.

During the following steps, verify that the Model 42 "Compat. Mode" is set to "J" (use the following screens: Multibase / Edit / Site Config / Compat. Mode [located near the middle of the screen]). If you need to change the setting, make note of the original setting.

[]b. Disconnect the blue and green wires (pins 11 & 13) from the radio connector on the Model 42.

[]c. Connect a 1000-Hz audio oscillator between the green wire (disconnected above) and the base station ground lead (pin 3 - radio connector on Model 42).

[]d. While monitoring transmitter deviation with a service monitor, adjust the audio oscillator until the modulation level doesn't increase with any further increase in the output of the audio oscillator.

[]e. Double the output level of the audio oscillator (to insure that you are well into the transmitters limiter).

[]f. Adjust the transmitter modulation pot (R337D) for 4.0 kHz (assuming 5.0 kHz total channel deviation). Disconnect the audio oscillator after this adjustment is complete.

[]g. Reconnect the green lead to pin 13 of the Model 42 radio connector.

[]h. Adjust the Model 42 TX DATA for 0.95-kHz deviation.

[]i. Reconnect the blue lead to pin 11 of the Model 42 radio connector.

[]j. Adjust the Model 42 TX AUD for 4.5-kHz deviation during ring bursts.

[]k. Turn off Test mode: set SW1-1 down and reset. To reset, press and hold the connect/disconnect button about 2 seconds, or until the front panel lights flash and go off. Then release the button.

Squelch Adjustments

[]l. With NO Receive carrier applied to the repeater, adjust the Model 42 SQUELCH fully CW. The "CARRIER" LED should light. Adjust slowly CCW until the LED goes off steady.

Receive Level Adjustments

[]m. Inject 1 mV Receive carrier directly into the Repeater RX Antenna port.

[]n. With 1-kHz tone modulating at 4-kHz deviation, adjust the Model 42 RX AUD potentiometer until 1 V p-p (354 mVrms) is measured at Model 42 TP3.

[]o. Remove the service monitor, and reconnect the antenna. Test the repeater using radios having VALID ID numbers.

[]9. Proceed to "Step 6: Making Trunking Connections".

F.2 RELM 800-MHZ REPEATER, OLD VERSION

[]1. Remove the top cover of the Regency Repeater.

* * * * * * * * * * * * * * * N O T E * * * * * * * * * * * * * * *

If a second feed-thru exists between the Regency Rx and Tx cavities *and* is wired, contact Regency/RELM personnel about upgrading the repeater before using.

* *

[]2. Verify proper data bus configurations have been set per Step 1.2.

JP18	bus type
JP14-17	bus polarities
JP12,13	terminations

[]3. Be sure that the Model 49 repeater interface jumpers are set correctly per the following:

JP1	A=TX discriminator audio
JP2	A=TX Flat Tone audio
JP3	A=SUBOUT Tx HI level
JP4	A=RX amp 20 dB gain
JP6	A=TX amp high range
JP7	A=COR from INTernal noise squelch
JP10	A=True TX data polarity
JP11	B=Invert RX data polarity
R55	CUT=AC coupled SUBOUT data

[]4. Verify Alarm and Cross-Busy jumper settings per Step 1.4.

JP3	Cross-Busy Output (JP7 may change if using cross-busy)

NOTE: These jumper positions have been found to operate properly with the factory default settings of the repeater. However, the settings of these repeaters may have been changed in the field or elsewhere. Therefore, some of these jumper positions may need to be changed to obtain proper operating levels.

[]5. Locate the Zetron jumper cable (Part No. 709-7152) in the cable kit (Part No. 815-9071). See Figure 4-9.

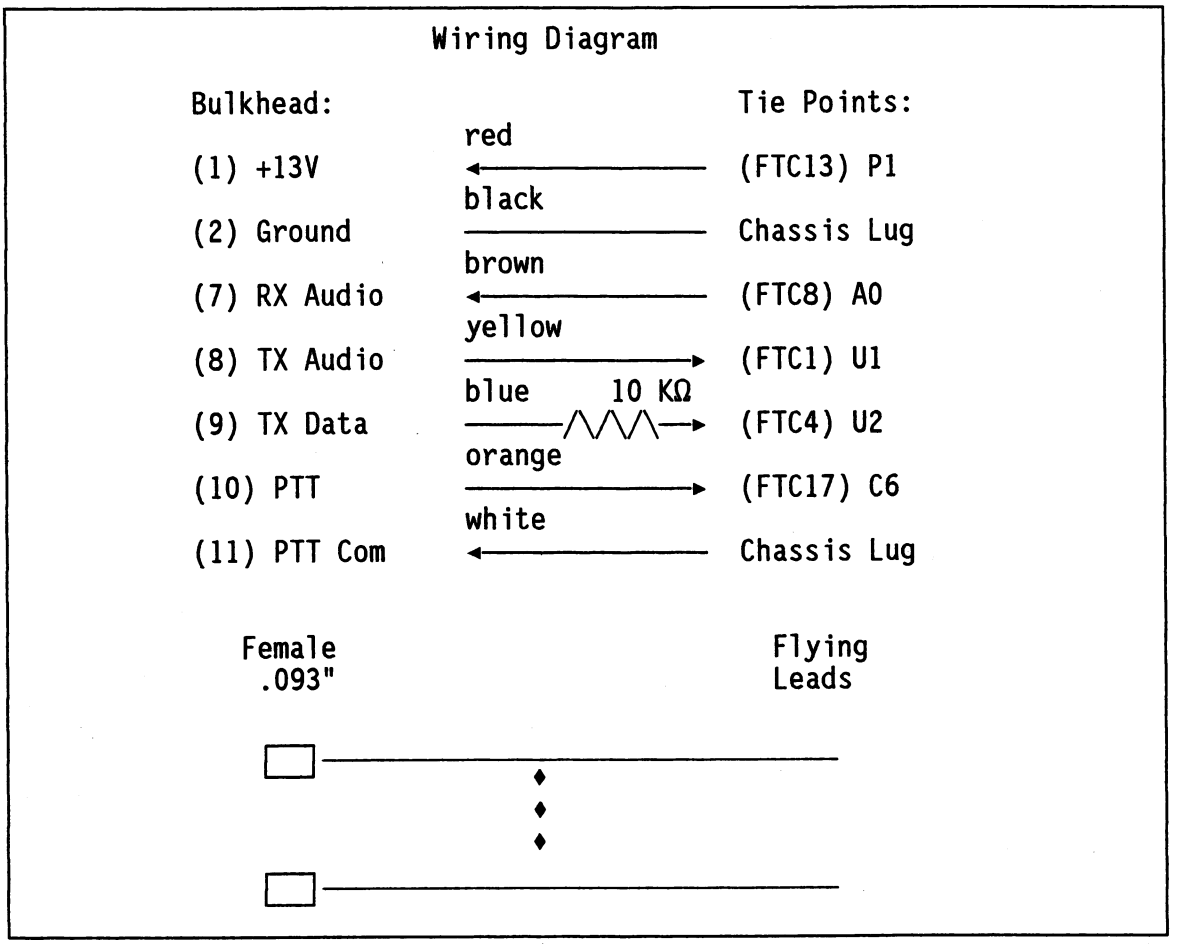

Figure 4-9. Relm Repeater Jumper Cable (P/N 709-7152)

[]6. Solder the bare wire ends to the feed-thru capacitors in the walls of the RF cabinet as shown in Figure 4-10.

Note that the blue wire has a resistor lead exposed (10 KΩ). If this wiring is being created in the field (i.e. not using the Zetron kit), the [10 KΩ] resistor may be eliminated and JP3 set to B for Model 42 units.

[]7. Solder the 100-ohm, ¼-watt resistor from the cable kit (Part No. 815-9071) across C305 of the repeater. C305 is located behind and to the right of R337D, the Transmit Limit Adjust potentiometer in the repeater transmit cavity. Refer to Figure 4-11.

[]8. Solder the black wire, white wire, and bare shield wire to a convenient chassis lug.

[]9. Insert the female 0.093-inch sockets from the jumper cable into the 12-position plastic bulkhead connector per the pin numbers shown in Figure 4-12.

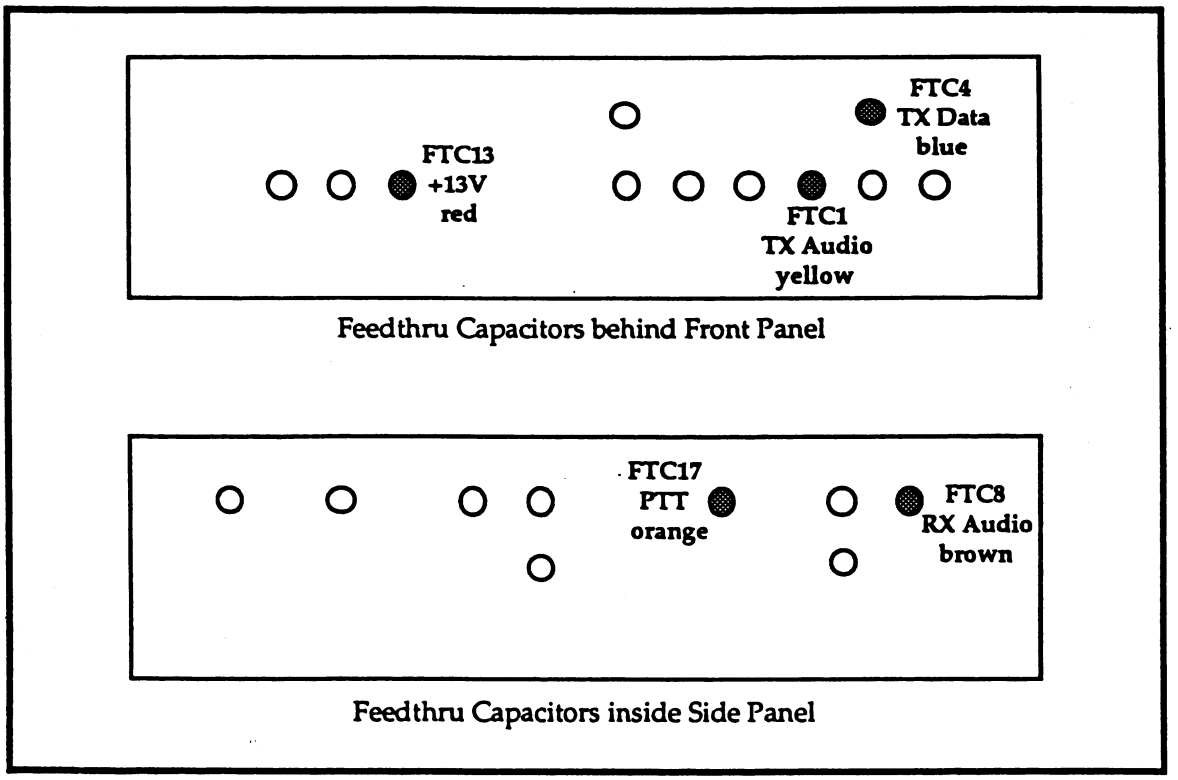

Figure 4-10. Relm Repeater Tie Points

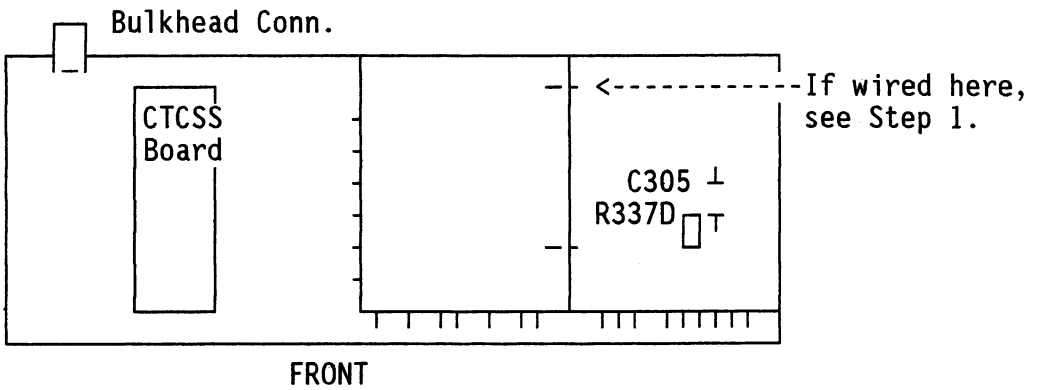

Figure 4-11. Top View of Relm 800 MHz Repeater

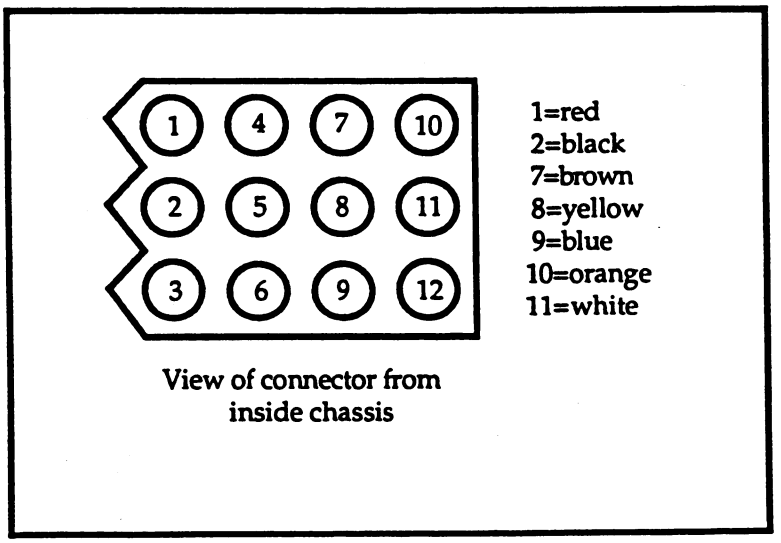

Figure 4-12. Relm Bulkhead Connector Pinout

[]10. Route the cable along the Relm rear panel (along the bottom chassis) and secure with tie-wraps.

[]11. Set the front panel controls as follow:

VOLUME:	Any position (receiver level to Zetron Model 49 is independent)
SQUELCH:	Any position (Model 49 squelching is independent)
REPEAT/LOCAL:	Set switch to IN (repeat) position

[]12. Connect the Model 42 to the Relm bulkhead connector with the repeater cable (709-7148), which is part of the Zetron cable kit (815-9071). Refer to Figures 4-13 and 4-14 for cable wiring and bulkhead connector location on the repeater.

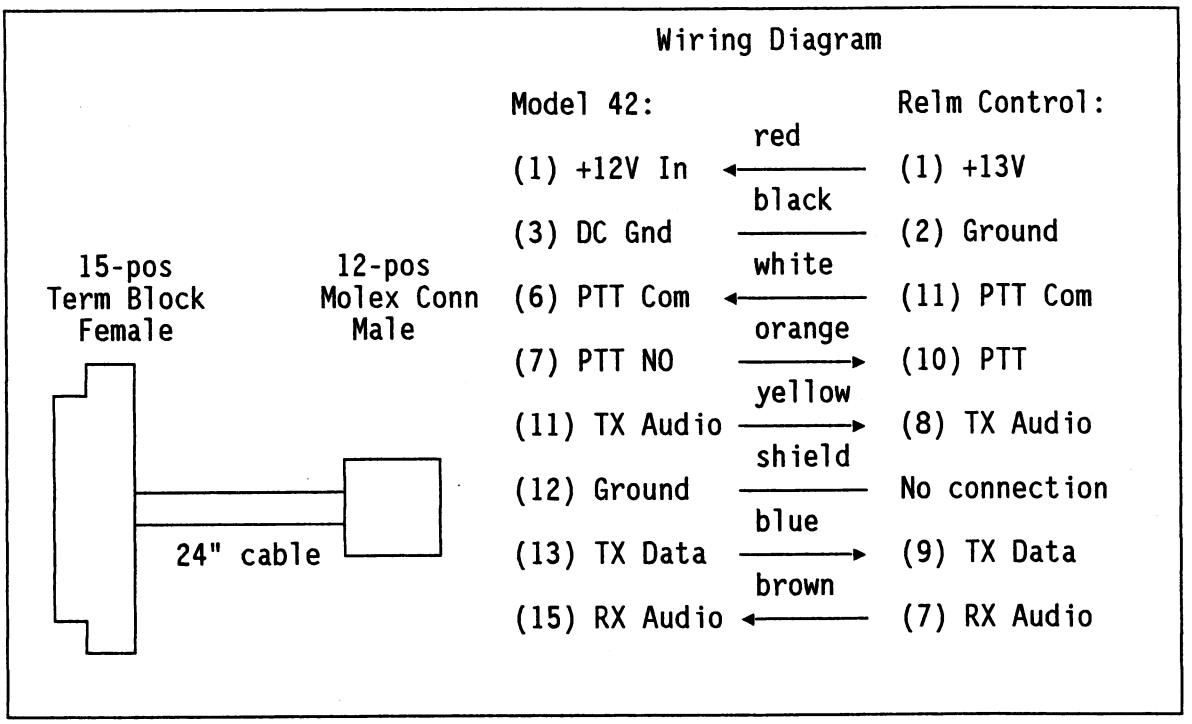

Figure 4-13. Model 42 to Relm Repeater Cable (P/N 709-7148)

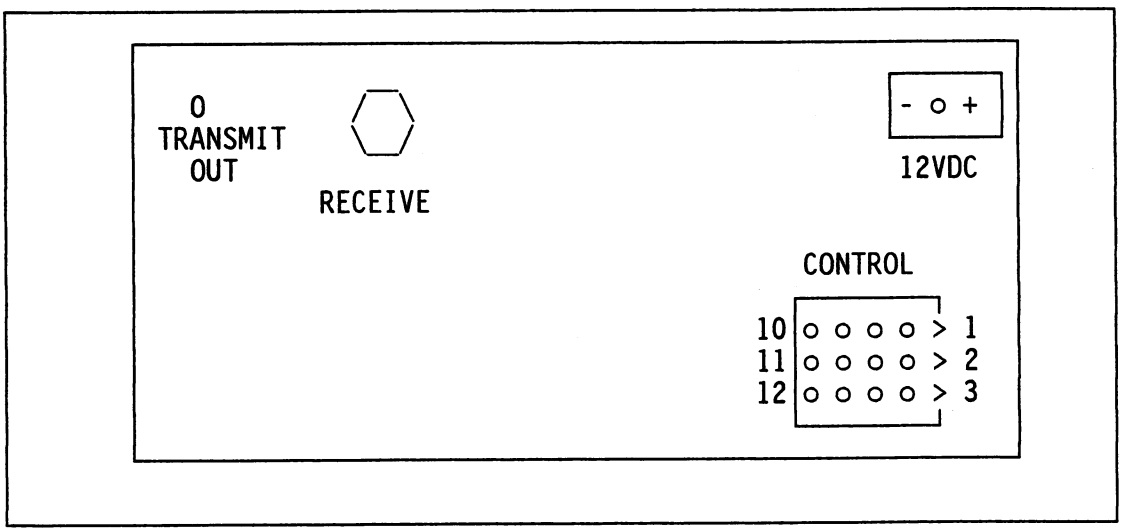

Figure 4-14. Relm Rear Panel

[]13. Repeater Adjustments:

Transmit Level Adjustments:

[]a. Put Model 42 into Test mode: put SW1-1 up, press and hold the connect/disconnect button about 2 seconds, or until the front panel lights flash and go off. Then release the button. The Model 42 should boot up transmitting data and ring bursts.

During the following steps, verify that the Model 42 "Compat. Mode" is set to "J" (use the following screens: Multibase/Edit/Site Config/Compat. Mode [located near the middle of the screen]). If you need to change the setting, make note of the original setting.

[]b. Disconnect the blue and yellow wires (pins 11 & 13) from the radio connector on the Model 42.

[]c. Connect a 1000-Hz audio oscillator between the yellow wire (disconnected above) and the base station ground lead (pin 3 - radio connector on Model 42).

[]d. While monitoring transmitter deviation with a service monitor, adjust the audio oscillator until the modulation level doesn't increase with any further increase in the output of the audio oscillator.

[]e. Double the output level of the audio oscillator (to insure that you are well into the transmitters limiter).

[]f. Adjust the transmitter modulation pot (R337D) for 4.0 kHz (assuming 5.0 kHz total channel deviation). Disconnect the audio oscillator after this adjustment is complete.

[]g. Reconnect the blue lead to pin 13 of the Model 42 radio connector.

[]h. Adjust the Model 42 TX DATA for 0.95-kHz deviation.

[]i. Reconnect the yellow lead to pin 11 of the Model 42 radio connector.

[]j. Adjust the Model 42 TX AUD for 4.5-kHz deviation during ring bursts.

[]k. Turn off Test mode: set SW1-1 down and reset. To reset, press and hold the connect/disconnect button about 2 seconds, or until the front panel lights flash and go off. Then release the button.

Squelch Adjustments:

[]l. With NO Receive carrier applied to the repeater, adjust the Model 42 SQUELCH fully CW. The "CARRIER" LED should light. Adjust slowly CCW until the LED goes off steady.

Receive Level Adjustments:

[]m. Inject 1 mV Receive carrier directly into the Repeater RX Antenna port.

[]n. With 1-kHz tone modulating at 4-kHz deviation, adjust the Model 42 RX AUD potentiometer until 1 V p-p (354 mVrms) is measured at Model 42 TP3.

[]o. With 100-Hz tone modulating at 0.8-kHz deviation (without the 1-kHz tone), verify 240 mVpp (85 mVrms) at TP3.

[]p. Remove the service monitor, and reconnect the antenna. Test the repeater using radios having VALID ID numbers.

[]12. Proceed to "Step 6: Making Trunking Connections".

G. SEA 220-MHZ REPEATER

[]1. Verify proper data bus configurations have been set per Step 1.2.

JP18	bus type
JP14-17	bus polarities
JP12,13	terminations

[]2. Be sure that the Model 42 repeater interface jumpers are set correctly per the following:

JP1	Not Installed
JP2	A=Tx Flat Tone Audio
JP3	Not Installed
JP4	B=RX amp 0 dB gain
JP6	Not Installed
JP7	C=COR from external (-) noise squelch
JP10	Not Installed
JP11	Not Installed
R55	IN=DC coupled SUBOUT data

Note 1: These Model 42 units are customized at Zetron for use with SEA Repeaters. Many components are not installed into the PCB, since they are not required. SEA version Model 42 boards are identified by PCB part number 702-9518.

Note 2: J1-4 on the rear panel functions as "SUBIN" and NOT as "GND" for this configuration. Subaudible data is input to this pin from the repeater for processing within the Model 42.

[]3. Verify Alarm and Cross-Busy lines are not used with the SEA Model 42. (For SEA Model 49 units, the "Control 1" line is utilized as an indicator of "TELCO ENABLED" status.)

[]4. Connect the Model 42 to the SEA 220 MHz Repeater with the SEA Repeater Cable (709-7238) as shown in Figure 4-15.

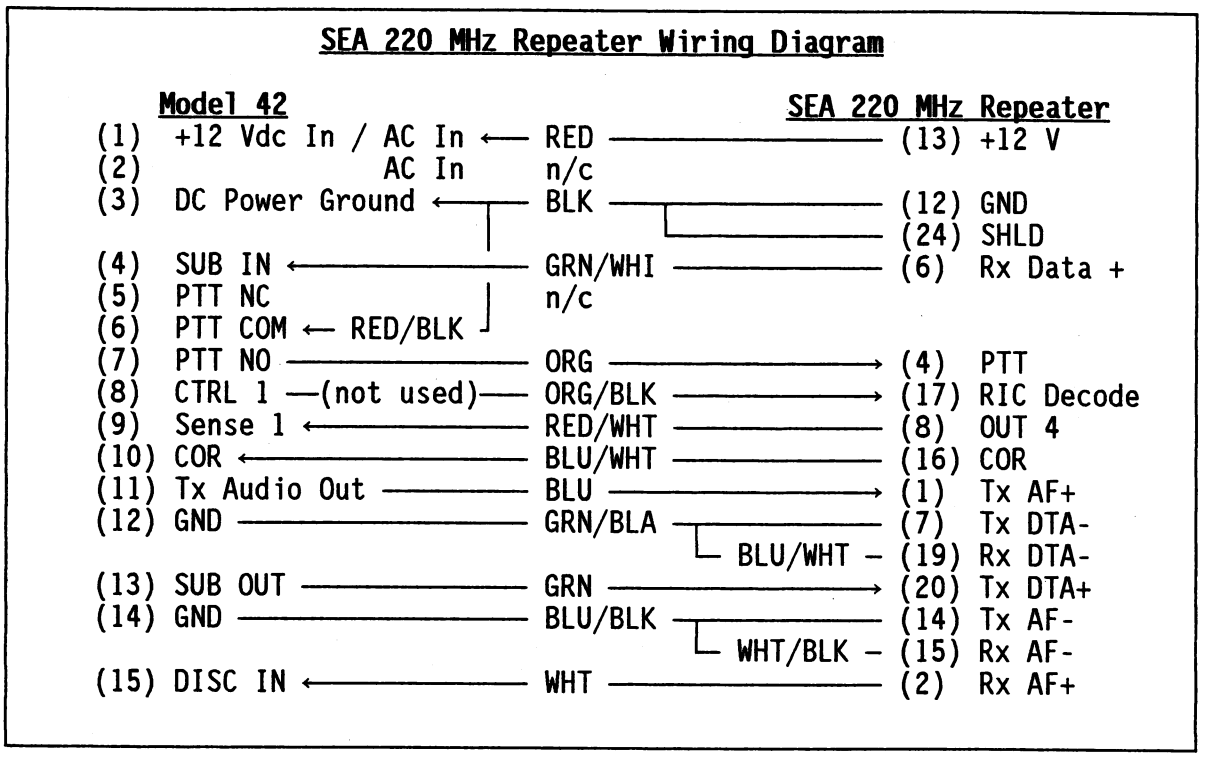

Figure 4-15. Model 42 SEA 220 MHz Repeater Cable (709-7238)

[]5. Set Repeater Levels as follows:

[]a. Verify proper repeater operation and signal levels without the Model 42 connected, per the repeater service manual.

[]b. Verify Model 42 jumper settings per steps 1-3 of this procedure.

[]c. Turn off all mobiles and hand-held units in the area.

[]d. Place an oscilloscope probe on the Model 42 rear panel connector J1-15.

[]e. Generate a test signal from an ESP504 mobile, operating in field test mode, with the PGM button depressed to enable a 1,000 Hz Test Tone. The mobile's test mode should be set on the repeater channel for dispatch or interconnect ID. A second mobile programmed similarly may be used to confirm repeat audio level balance.

[]f. Key up the mobile radio. Note that the input to the Model 42 from the repeater is 500 ±50 mVp-p at J1-15 (DISC IN). If it is not, the repeater will need to be adjusted as well (Refer to the repeater manual for that procedure).

Place the oscilloscope probe on TP3, located in front of the "RX AUD" potentiometer. Adjust the RX AUDio level fro 250 mVp-p at TP3.

[]g. Place the oscilloscope probe onto TP4, located behind the "TX AUD" potentiometer. Adjust the TX AUDio level for 300 mVp-p at TP4 ... or at J1-11, the output on the rear panel.

[]6. ALTERNATE METHOD TO SUBSTITUTE FOR STEP 5, WITHOUT A REPEATER:

It is possible to perform an initial adjustment without a repeater connected. This operation requires use of a communications service monitor, or an audio signal generator and an oscilloscope. Also, it is necessary to connect a 600 Ω (¼W or larger) resistor between the TX AUDIO output at J1-11 and signal GND at J1-12.

TRANSMIT LEVEL

[]a. Set the TX AUDio pot fully counterclockwise. Set the Model 42 front panel DIP switch A:1 up, A:2 down. Reset the Model 42 by depressing the CONNECT/DISCONNECT switch twice (or hold for approximately two seconds until LEDs flash). After re-booting, the Model 42 will invoke TEST MODE and commence continuous transmit of the repeater TEST ID code (defined in Multibase) and ringing tones.

[]b. Place the oscilloscope probe on TP4, located behind the "TX AUD" potentiometer.

[]c. During ring burst generation, adjust the TX AUDio level to attain 900 mVp-p (318 mVrms) at TP4, or at the output connection J1-11.

Without the 600 Ω load resistior installed (J1-11 to J1-12), set this level to 1.50 Vp-p (530 mVrms).

[]d. Set the front panel DIP switch A:1 down, and return A:2 to it's prior position. Reset the Model 42 (press and hold "RESET" until LEDs flash) to exit the TEST MODE.

RECEIVE LEVEL

[]e. Connect the Audio Signal Generator to the input at J1-15, and adjust output to 2 Vp-p (707 mVrms) at 1 KHz.

[]f. Place an oscilloscope on TP3, located behind the "RX AUD" potentiometer of the front panel.

[]g. Adjust the RX AUDio level to attain 1.0 Vp-p (354 mVrms) at TP3.

[]7. Proceed to "Step 6: Making Trunking Connections" later in this section.

* * * * * * * * * * * * * * * * N O T E * * * * * * * * * * * * * * * * * *

The troubleshooting flowchart of Section 6 is applicable to the SEA version as long as components (and circuits) identified by '#' are ignored as they are not installed in the PCB assembly.

* *

H1. STANDARD RP70K REPEATER

[]1. Verify proper data bus configurations have been set per Step 1.2.

JP18	bus type
JP14-17	bus polarities
JP12,13	terminations

[]2. Be sure that the Model 42 repeater interface jumpers are set correctly per the following:

JP1	A=TX discriminator audio
JP2	B=TX de-emphasized Tone audio
JP3	A=SUBOUT Tx HI level
JP4	A=RX amp 20 dB gain
JP6	B=TX amp low range
JP7	A=COR from internal noise squelch
JP10	B=Invert TX data polarity
JP11	B=Invert RX data polarity
R55	IN=DC coupled SUBOUT data

[]3. Verify Alarm and Cross-Busy jumper settings per Step 1.4.

JP8	Cross-Busy Output (JP7 may change if using cross-busy)

NOTE: These jumper positions have been found to operate properly with the factory default settings of the repeater. However, the settings of these repeaters may have been changed in the field or elsewhere. Therefore, some of these jumper positions may need to be changed to obtain proper operating levels.

Perform the following repeater modifications to make the RP70K capable of handling the subaudible data requirements of LTR:

[]4. Remove the bottom cover.

[]5. Remove the shields from the TX and RX assemblies.

[]6. Unplug W201 from J201 on the Control Card. Slide the Yellow wire out of W201 pin 2. Refer to Figure 4-16 for location of J201.

[]7. Unplug W207 from J207 on the Control Card. Slide the White wire out of W207 pin 6. Refer to Figure 4-16 for location of J207.

[]8. Connect the Yellow wire to the White wire. [Data Input Signal]

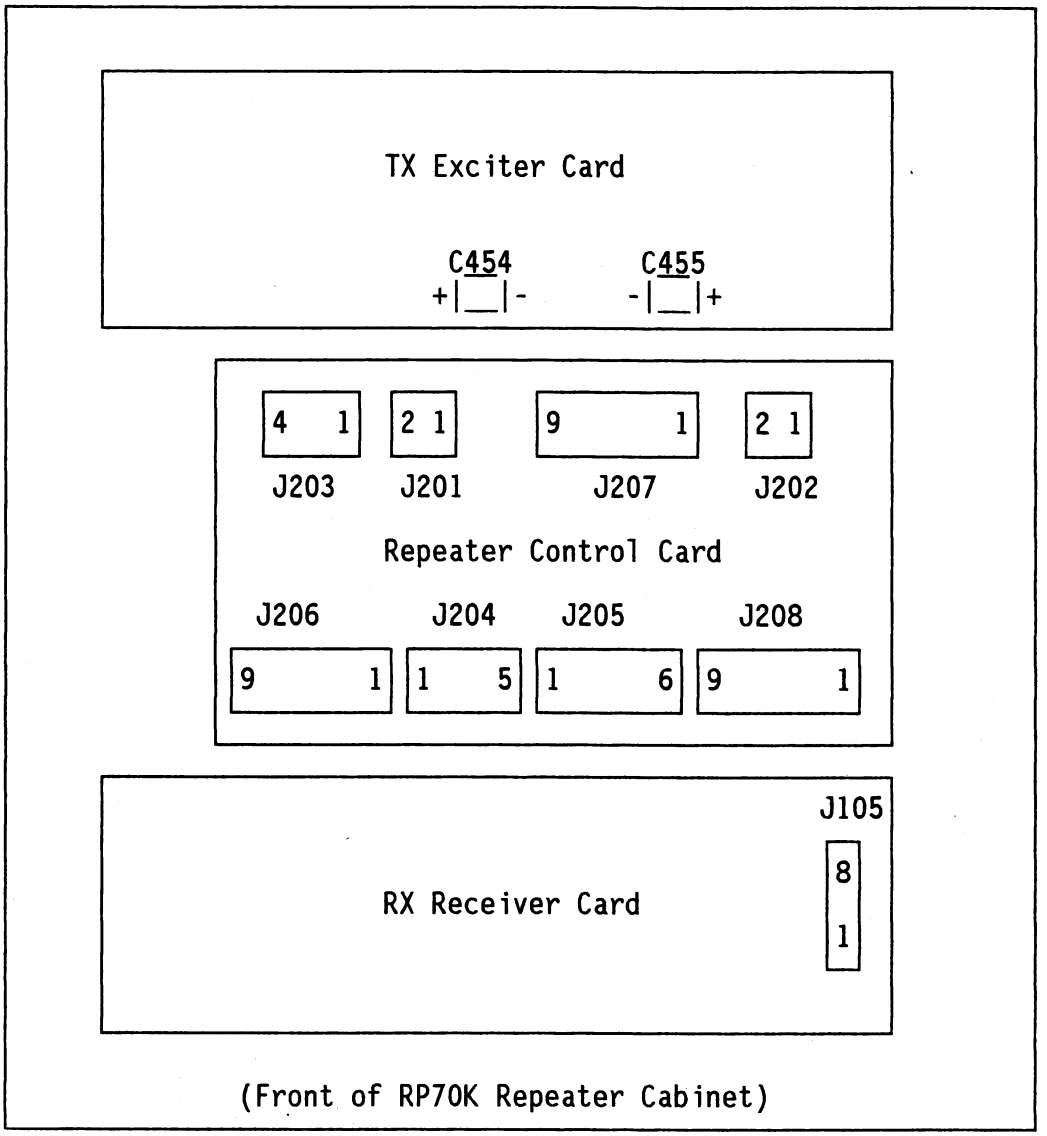

Figure 4-16. Layout of RP70K Cards and Connectors

[]9. Plug connectors W201 [J201] and W207 [J207] back into place. Refer to Figure 4-16.

[]10. Unplug W205 from J205 on the Control Card. Slide the shielded cable from out of connector W205 pins 5&6. Cut the ends, strip back 1/16", and tin the leads. Refer to Figure 4-16 for connector location.

[]11. Unplug W105 from J105 on the Receiver Card. Slide Black and Yellow wires out of pins 1&2. Refer to Figure 4-16.

[]12. Solder the shielded cable from W205 to the wires from W105: White to Yellow, Black to Black. [RX Discriminator Audio] Refer to Figure 4-16.

[]13. Insert the White/Yellow wire into W105 pin 2, the Black/Black wire into W105 pin 1.

[]14. Plug connectors W105 [Rx J105] and W205 [Ctrl J205] back into place.

[]15. Unscrew the 4 mounting screws from the TX Exciter Card and flip it.

[]16. Replace C454 and C455 capacitors with 100 μF 25 V each. Observe correct polarity!

[]17. Reinstall the TX Exciter Card.

[]18. Reinstall the shields and bottom cover.

[]19. Set the repeater front panel controls as follow.

TONE1 and TONEB switches in OUT positions
MONITOR switch in OUT position
BASE/REPEATER switch in IN (base) position
SQL control in IN (preset) position
VOLUME control IN to turn off the speaker or OUT to listen

[]20. Connect the Model 42 to the RP70K with the Generic Repeater Cable (709-7116). Refer to Figure 4-17.

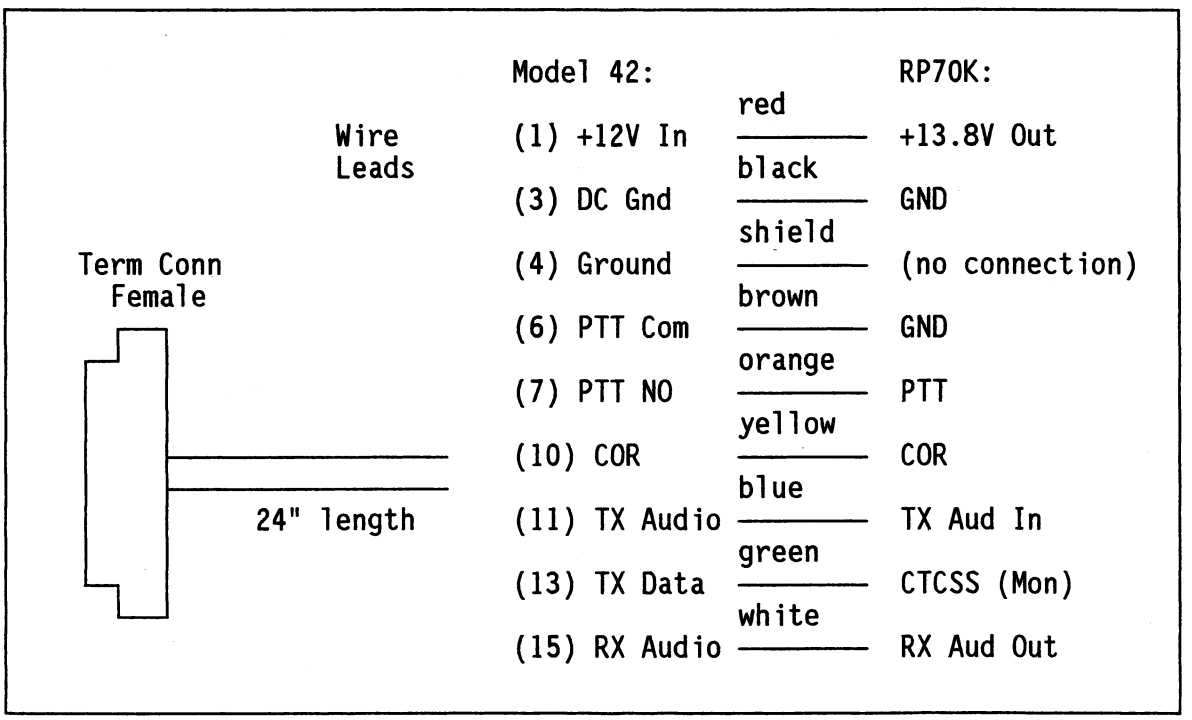

Figure 4-17. Model 42 to Generic Repeater Cable (P/N 709-7116)

[]21. Proceed to "Step 5: Setting Repeater Levels" or "Step 5A: Setting Repeater Levels for V2+ Firmware".

Note: You can record your settings on the worksheets at the end of this section.

H2. STANDARD RPT-38 REPEATER

[]1. Verify proper data bus configurations have been set per Step 1.2.

JP11	bus type
JP17-20	bus polarities
JP21,22	terminations

[]2. Be sure that the Model 42 repeater interface jumpers are set correctly per the following:

JP1	A=TX discriminator audio
JP2	B=TX Tone De-emphasised audio
JP3	A=SUBOUT Tx HI level
JP4	B=RX amp high range
JP6	A=TX amp HIGH range
JP7	A=ISQ; COR from internal squelch circuit
JP10	A=True TX data polarity
JP11	B=Invert RX data polarity
R55	CUT=AC Coupled SUBOUT data

[]3. Verify Alarm and Cross-Busy jumper settings per Step 1.4.

JP3	Cross-Busy Output (JP7 may change if using cross-busy)

NOTE: These jumper positions have been found to operate properly with the factory default settings of the repeater. However, the settings of these repeaters may have been changed in the field or elsewhere. Therefore, some of these jumper positions may need to be changed to obtain proper operating levels.

[]4. Connect the Model 42 to the RPT-38 Repeater using the generic repeater interface cable (part #709-7116) and Figure 4-18.

[]5. Connect a jumper wire at the Model 42 end of the cable between pins 4 and 6.

Model 42		709-7116	Standard RPT-38 Repeater Connections			
Function	J1	Wire Color	TB1	Color	RX DB-15	TX DB-15
AC/DC +12V	1	RED	TB-11	RED	9,10	9,10
AC	2					
DC GND	3	BLACK	TB-12	BLA	14,15	14,15
GND	4	SHIELD	NC			
PTT NC	5					
PTT COM	6	←Add jumper				
PTT NO	7	ORANGE	TB-9	WHI	NC	13
CTL-1	8					
SENSE-1	9					
COR	10	YELLOW	TB-8	GRA	11	NC
TX AUD	11	BLUE	TB-4	YEL	NC	1
GND	12					
SUB OUT	13	GREEN	TB-6	BLU	NC	8
GND	14					
DISC IN	15	WHITE	TB-5	GRN	6	NC

NOTES:

1. The RPT-38 Repeater is configured to facilitate one transmitter T881 module and one receiver T885 module, mounted onto a single 19" rack faceplate.
2. ONLY ONE M42 should be connected to each transmit / receive pair of RF modules, via the "TB" connector. (All Tx/Rx terminations are shown for technical convenience.)

Figure 4-18. Model 42 to Standard RPT-38 Repeater, Cable (P/N 709-7116)

[]6. Verify the RPT-38 T881 Transmitter jumpers, and T885 Receiver jumpers as follows:

T881 Tx Jumpers	T885 Rx Jumpers
PL100 = 3-4	PL100 = 2-3
PL101 = 1-2	PL101 = 1-2
PL102 = 9-10	PL102 = 1-2
PL103 = 3-4	PL104 = 1-2
	PL105 = 2-3
	PL103 = Place jumper onto pin 3 only (not installed).
	PL106 = Place jumper onto pin 3 only (not installed).
	Add: Jumper wire soldered from PAD111 [DEMOD O/P] to PAD122 [AUDIO 2] (or to PL106-1).

[]7. Set the TX and RX audio and data levels by following the procedure described in "Step 5: Setting Repeater Levels" or "Step 5A: Setting Repeater Levels for V2+ Firmware".

J1. TAIT 8xx Series RACKFRAME REPEATER

[]1. Verify proper data bus configurations have been set per Step 1.2.

JP18	bus type
JP14-17	bus polarities
JP12,13	terminations

[]2. Be sure that the Model 42 repeater interface jumpers are set correctly per the following:

JP1	A=TX discriminator audio
JP2	B=TX de-emphasized Tone audio
JP3	A=SUBOUT Tx HI level
JP4	B=RX amp 0 dB gain
JP6	A=TX amp high range
JP7	A=COR from internal noise squelch
JP10	A=True TX data polarity
JP11	B=Invert RX data polarity
R55	CUT=AC coupled SUBOUT data

[]3. Verify Alarm and Cross-Busy jumper settings per Step 1.4.

JP8	Cross-Busy Output (JP7 may change if using cross-busy)

NOTE: These jumper positions have been found to operate properly with the factory default settings of the repeater. However, the settings of these repeaters may have been changed in the field or elsewhere. Therefore, some of these jumper positions may need to be changed to obtain proper operating levels.

[]4. Connect the Model 49 to the Tait Repeater using the generic repeater interface cable (part #709-7116) and Figure 4-19. Be careful to reference the correct rackframe slots for the transmitter module and receiver module applicable for your installation.

[]5. Connect a jumper wire at the Model 49 end of the cable between pins 4 and 6.

Model 42		709-7116	Tait Transmitter Rackframe Connections					Tait Receiver Rackframe Connections				
Function	J1	Wire Color	CH 1	CH 2	CH 3	CH 4	CH 5	CH 1	CH 2	CH 3	CH 4	CH 5
AC/DC +12V	1	RED	TB1-1	TB1-6	TB1-11	TB2-1	TB2-6					
AC	2											
DC GND	3	BLACK	TB1-2	TB1-7	TB1-12	TB2-2	TB2-7					
GND	4	SHIELD	NC	NC	NC	NC	NC	NC	NC	NC	NC	NC
PTT NC	5											
PTT COM	6	Add jumper										
PTT NO	7	ORANGE	TB1-5	TB1-10	TB1-15	TB2-5	TB2-10					
CTL-1	8											
SENSE-1	9											
COR	10	YELLOW						TB1-2	TB1-4	TB1-6	TB1-8	TB1-10
TX AUD	11	BLUE	TB1-3	TB1-8	TB1-13	TB2-3	TB2-8					
GND	12											
SUB OUT	13	GREEN	TB1-4	TB1-9	TB1-14	TB2-4	TB2-9					
GND	14											
DISC IN	15	WHITE						TB1-1	TB1-3	TB1-5	TB1-7	TB1-9

NOTES:

1. The Tait Rackframe configuration is configured to facilitate 5 transmitter T881 modules in one rack, and five receiver T885 modules in a second rack.
2. ONLY ONE Model 42 should be connected to each transmit / receive pair of modules (i.e. Five (5) Model 42 units are required for five repeaters). All Tx/Rx terminations are shown for convenience.
3. The receiver connections will need to be extended with wires to the receiver rackframe. Shielded wires are preferred, having the shield connected at one end only.

Figure 4-19. Model 42 to Tait Repeater Cable (P/N 709-7116)

[]6. Verify the Tait T881 Transmitter jumpers, and T885 Receiver jumpers as follows:

T881 Tx Jumpers	T885 Rx Jumpers
PL100 = 3-4	PL100 = 2-3
PL101 = 1-2	PL101 = 1-2
PL102 = 9-10	PL102 = 1-2
PL103 = 3-4	PL104 = 1-2
	PL105 = 2-3
	PL103 = Place jumper onto pin 3 only (not installed).
	PL106 = Place jumper onto pin 3 only (not installed).
	Add: Jumper wire soldered from PAD111 [DEMOD O/P] to PAD122 [AUDIO 2] (or to PL106-1).

[]7. Set the TX & RX audio and data levels by following the procedure described in "Step 5: Setting Repeater Levels" or "Step 5A: Setting Repeater Levels for V2+ Firmware".

J2. TAIT 8XX SERIES SLIMLINE REPEATER

[]1. Verify proper data bus configurations have been set per Step 1.2.

JP18	bus type
JP14-17	bus polarities
JP12,13	terminations

[]2. Be sure that the Model 42 repeater interface jumpers are set correctly per the following:

JP1	A=TX discriminator audio
JP2	B=TX de-emphasized Tone audio
JP3	A=SUBOUT Tx HI level
JP4	B=RX amp 0 dB gain
JP6	A=TX amp high range
JP7	A=COR from internal noise squelch
JP10	A=True TX data polarity
JP11	B=invert RX data polarity
R55	CUT=AC coupled SUBOUT data

[]3. Verify Alarm and Cross-Busy jumper settings per Step 1.4.

JP3	Cross-Busy Output (JP7 may change if using cross-busy)

NOTE: These jumper positions have been found to operate properly with the factory default settings of the repeater. However, the settings of these repeaters may have been changed in the field or elsewhere. Therefore, some of these jumper positions may need to be changed to obtain proper operating levels.

[]4. Connect the Model 42 to the Tait Repeater using the generic repeater interface cable (part #709-7116) and Figure 4-20.

[]5. Connect a jumper wire at the Model 42 end of the cable between pins 4 and 6.

Model 42		709-7116	Tait Slimline Repeater Connections			
Function	J1	Wire Color	TB1	Color	RX DB-15	TX DB-15
AC/DC +12V	1	RED	TB-11	RED	9,10	9,10
AC	2					
DC GND	3	BLACK	TB-12	BLA	14,15	14,15
GND	4	SHIELD	NC			
PTT NC	5		TB-3	ORG	NC	4
PTT COM	6	←Add jumper				
PTT NO	7	ORANGE	TB-9	WHI	NC	13
CTL-1	8					
SENSE-1	9					
COR	10	YELLOW	TB-8	GRA	11	NC
TX AUD	11	BLUE	TB-4	YEL	NC	1
GND	12					
SUB OUT	13	GREEN	TB-6	BLU	NC	8
GND	14					
DISC IN	15	WHITE	TB-5	GRN	7	NC

NOTES:

1. The Tait Slimline Repeater is configured to facilitate one transmitter T881 module and one receiver T885 module, mounted onto a single 19" rack faceplate.
2. ONLY ONE Model 42 should be connected to each transmit / receive pair of modules (i.e. each Slimline), via the "TB" connector.
   (All Tx/Rx terminations are shown for technical convenience.)
3. Remove all TB1 jumpers not shown above.

Figure 4-20. Model 42 to Tait Repeater Cable (P/N 709-7116)

[]6. Verify the Tait T881 Transmitter jumpers, and T885 Receiver jumpers as follows:

T881 Tx Jumpers	T885 Rx Jumpers
PL100 = 3-4	PL100 = 2-3
PL101 = 1-2	PL101 = 1-2
PL102 = 9-10	PL102 = 1-2
PL103 = 3-4	PL104 = 1-2
	PL105 = 2-3
	PL103 = Place jumper onto pin 3 only (not installed).
	PL106 = Place jumper onto pin 3 only (not installed).
	Add: Jumper wire soldered from PAD111 [DEMOD O/P] to PAD122 [AUDIO 2] (or to PL106-1).

[]7. Set the TX & RX audio and data levels by following the procedure described in "Step 5: Setting Repeater Levels" or "Step 5A: Setting Repeater Levels for V2+ Firmware".

K1. UNIDEN MRS804 REPEATER

[]1. Remove the top cover of the MRS804 or slide it forward in its rack-mounting frame.

[]2. Loosen 2 retainer screws and tilt up the transceiver sub-chassis.

[]3. Verify proper data bus configurations have been set per Step 1.2.

JP18	bus type
JP14-17	bus polarities
JP12,13	terminations

[]4. Be sure that the Model 42 repeater interface jumpers are set correctly per the following:

JP1	A=TX discriminator audio
JP2	B=TX de-emphasized Tone audio
JP3	A=SUBOUT Tx HI level
JP4	A=RX amp 20 dB gain
JP6	A=TX amp high range
JP7	A=COR from internal noise squelch
JP10	A=True TX data polarity
JP11	B=Invert RX data polarity
R55	CUT=AC coupled SUBOUT data

[]5. Verify Alarm and Cross-Busy jumper settings per Step 1.4.

JP8	Cross-Busy Output (JP7 may change if using cross-busy)

NOTE: These jumper positions have been found to operate properly with the factory default settings of the repeater. However, the settings of these repeaters may have been changed in the field or elsewhere. Therefore, some of these jumper positions may need to be changed to obtain proper operating levels.

[]6. Disconnect the Logic/Control as follows:

[]a. For MRS804S (conventional): disconnect the 13-pin CN1 connector from J601 on the repeater control board. The 14-pin CN2 connector should be loose already.

[]b. For MRS804T (trunking): disconnect the 13-pin CN1 and 14-pin CN2 connectors from the logic board.

[]7. Connect the Zetron jumper board (Part No. 702-9404) between CN1 and CN2. This board is part of the Zetron MRS804 Cable Kit (815-9112). Note that the Uniden connectors have plastic keys in the pin 2 position. Refer to Figure 4-21 for jumper board details.

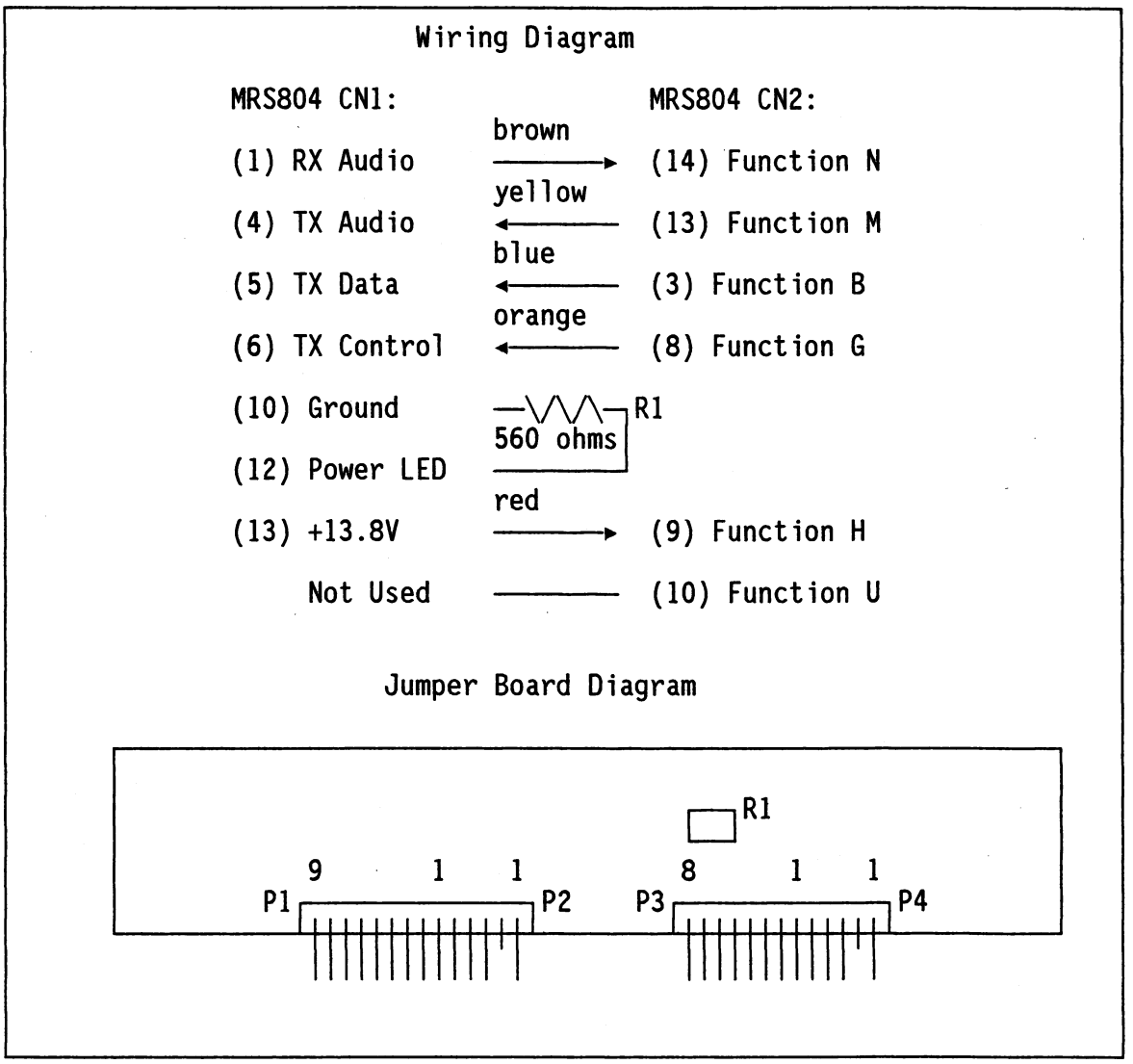

Note: If you have an early cable instead of a board, the green wire on the jumper cable will not be used.

Figure 4-21. Zetron/Uniden MRS804 Jumper Board (P/N 702-9404)

[]8. Carefully close and lock the sub-chassis, being careful not to pinch the exciter coaxial cable, nor the power wires.

[]9. Secure the sub-chassis with the locking screws.

[]10. Turn VR103 on the MRS804 exciter about 1/4 turn clockwise to get more adjustment range on the Zetron transmit data deviation. Refer to Figure 4-22 for VR103 location.

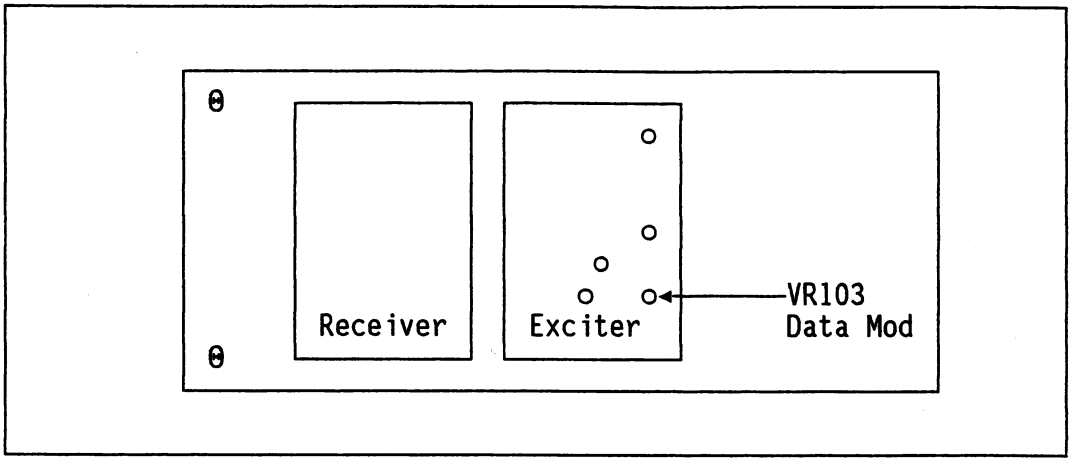

Figure 4-22. Uniden MRS804 Internal Sub-Chassis

[]11. Replace the top cover on the MRS804 or slide it back into its rack-mounting frame.

[]12. Set the front panel controls as follow:

VOLUME	any position (receiver level to Zetron Model 42 is independent)
SQUELCH	any position (squelch level is set in the Model 42)
REPEAT/LOCAL	switch in IN (repeat) position
OPT	switch either position

[]13. Connect the Model 42 to the MRS804 Accessory connector with the repeater cable (709-7132), which was included in the Zetron MRS804 Cable Kit (815-9112). Refer to Figure 4-23 for cable wiring and to Figure 4-24 for the location of the accessory connector.

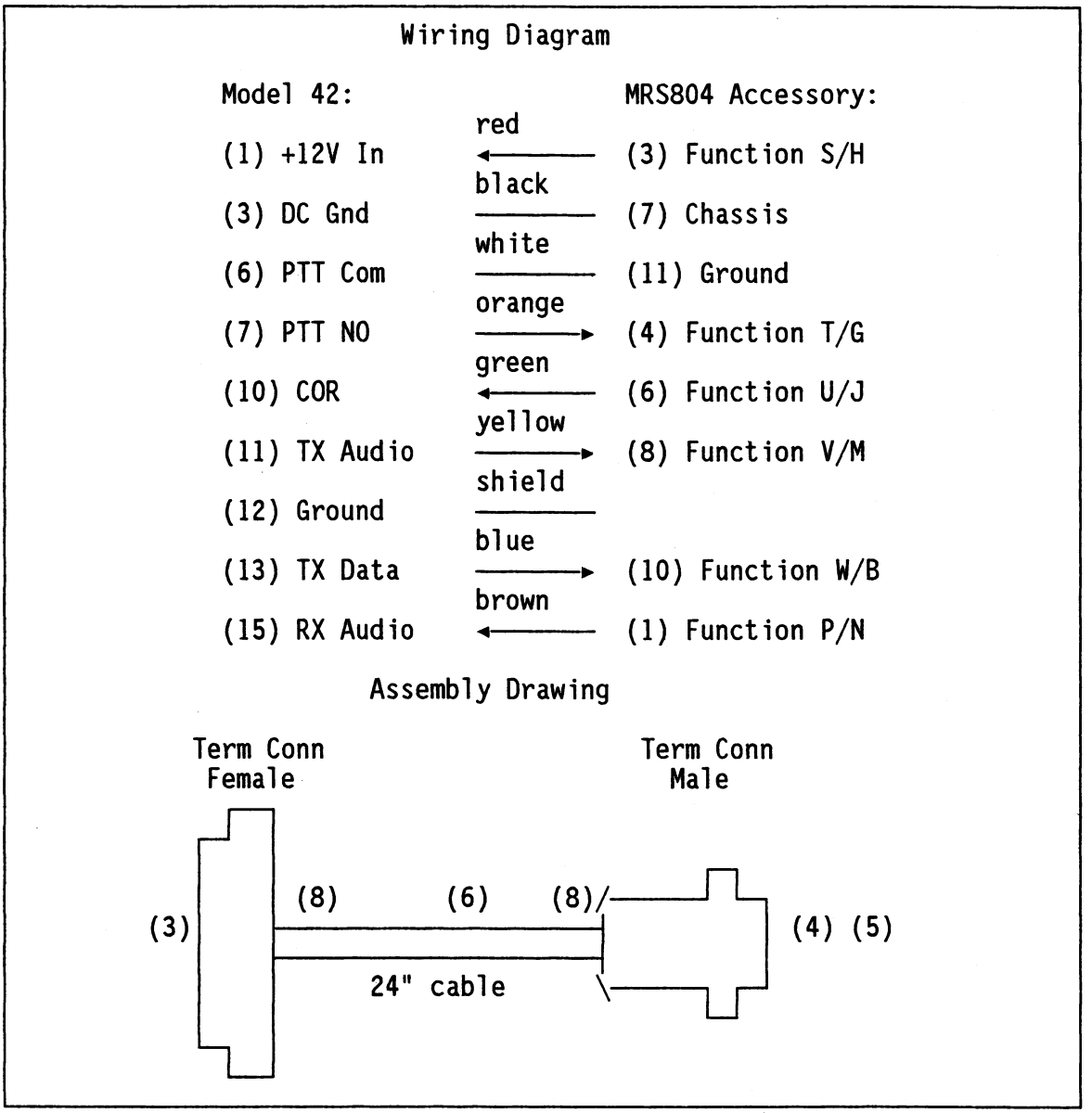

Figure 4-23. Model 42 to Uniden MRS804 Repeater Cable (P/N 709-7132)

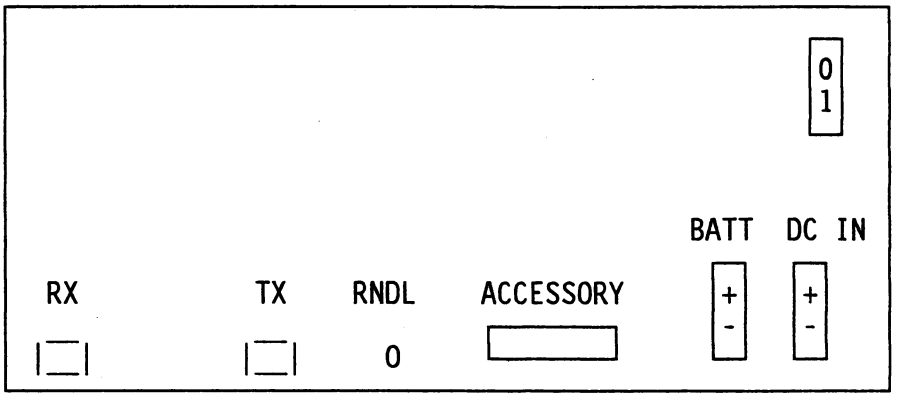

Figure 4-24. Uniden MRS804 Rear Panel

[]14. Set the TX and RX audio and data levels by following the steps listed below.

Note: This procedure requires two service monitors and an LTR encoder. If not all of the equipment is available, follow the procedure described in "Step 5: Setting Repeater Levels" or "Step 5A: Setting Repeater Levels for V2+ Firmware".

NOISE SQUELCH LEVEL

[]a. Set the first communications monitor to generate an RF signal of 0.25 μV on the repeater receive frequency.

[]b. On the Model 42, set the front panel COR pot to midway.

[]c. On the Model 42, turn the front panel SQ pot counterclockwise until the COR light goes out. Turn the SQ pot clockwise until the COR light just comes on solid.

RECEIVE LEVELS

[]d. Increase the RF signal level to 1 mV, modulated with a 1kHz sine wave at ±4 kHz modulation. Attach an AC voltmeter to TP3, behind the front panel RX pot (Model 42). Adjust the RX AUD pot on the Model 42 for a 0.35 VAC RMS reading on the meter (1 V p-p on an oscilloscope).

[]e. Apply an RF signal at 1 mV output, modulated with the proper LTR data at 1 kHz modulation. Verify that LTR data is present at approximately 240 mVpp at TP3 with no audio.

[]f. The Model 42 CARRIER, TRANSMIT, RX PACKET, TX PACKET and RX DATA QUAL lights should all be lit at this time. If not, double check the LTR polarity jumpers (JP10,JP11), the Repeater and Area switches on the Model 42 front panel, and ensure the proper LTR data is being generated at the communications monitor.

TRANSMIT LEVELS

[]g. Set the second communications monitor to receive on the Repeater transmit frequency.

[]h. Set the TX AUDIO pot fully counterclockwise.

[]i. Adjust the TX DATA pot on the Model 42 main board fully clockwise or to 11 o'clock. Adjust VR103 on the Repeater Transmitter Module for ±1 kHz deviation as measured on the second monitor.

[]j. Modulate the first communications monitor with a 1kHz tone, set the total modulation for 4 kHz (1.6 kHz for 900 MHz), or 5 kHz with subaudible (2.5 kHz for 900 MHz).

[]k. Set the TX AUD pot on the Model 42 front panel halfway or to 6 o'clock.

[]l. Set VR105 on the Repeater Transmitter Module so that the transmitted 1kHz tone (as seen on the second monitor) is just starting to clip at the peaks.

[]m. Set VR104 on the Repeater Transmitter Module so that the total transmitted deviation is 5 kHz (2.5 kHz for 900 MHz).

[]15. Proceed to "Step 6: Making Trunking Connections".

K2. UNIDEN MRS802 REPEATER

[]1. Remove the top and bottom covers of the MRS802.

[]2. Verify proper data bus configurations have been set per Step 1.2.

JP18	bus type
JP14-17	bus polarities
JP12,13	terminations

[]3. Be sure that the Model 42 repeater interface jumpers are set correctly per the following:

JP1	A=TX discriminator audio
JP2	B=TX de-emphasized Tone audio
JP3	A=SUBOUT TxHI level
JP4	A=RX amp 20 dB gain
JP6	A=TX amp high range
JP7	A=COR from internal noise squelch
JP10	A=True TX data polarity
JP11	B=Invert RX data polarity
R55	CUT=AC coupled SUBOUT data

[]4. Verify Alarm and Cross-Busy jumper settings per Step 1.4.

JP8	Cross-Busy Output (JP7 may change if using cross-busy)

NOTE: These jumper positions have been found to operate properly with the factory default settings of the repeater. However, the settings of these repeaters may have been changed in the field or elsewhere. Therefore, some of these jumper positions may need to be changed to obtain proper operating levels.

[]5. Disconnect the previously installed repeater logic/control as follows:

[]a. For MRS800 (conventional): disconnect the 13-pin CN1 connector from the repeater control board. The 13-pin CN2 connector should be loose already.

[]b. For MRS802 (trunking): disconnect the 13-pin CN1 and CN2 connectors from the logic board underneath the repeater frame.

[]6. Connect the Zetron jumper cable (in the 815-9072 cable kit) between CN1 and CN2. The 7-position Zetron jumper connects its orange wire to CN2's orange wire. The 13-position end connects its red wire to CN1's red wire. This jumper cable is depicted in Figure 4-25.

Note: Connectors CN1 and CN2 each have 13 positions. CN2 is the one with a short pink wire loop from pins 1 & 4. On CN1, pin 13 has a red wire, CN2-13 has an orange wire.

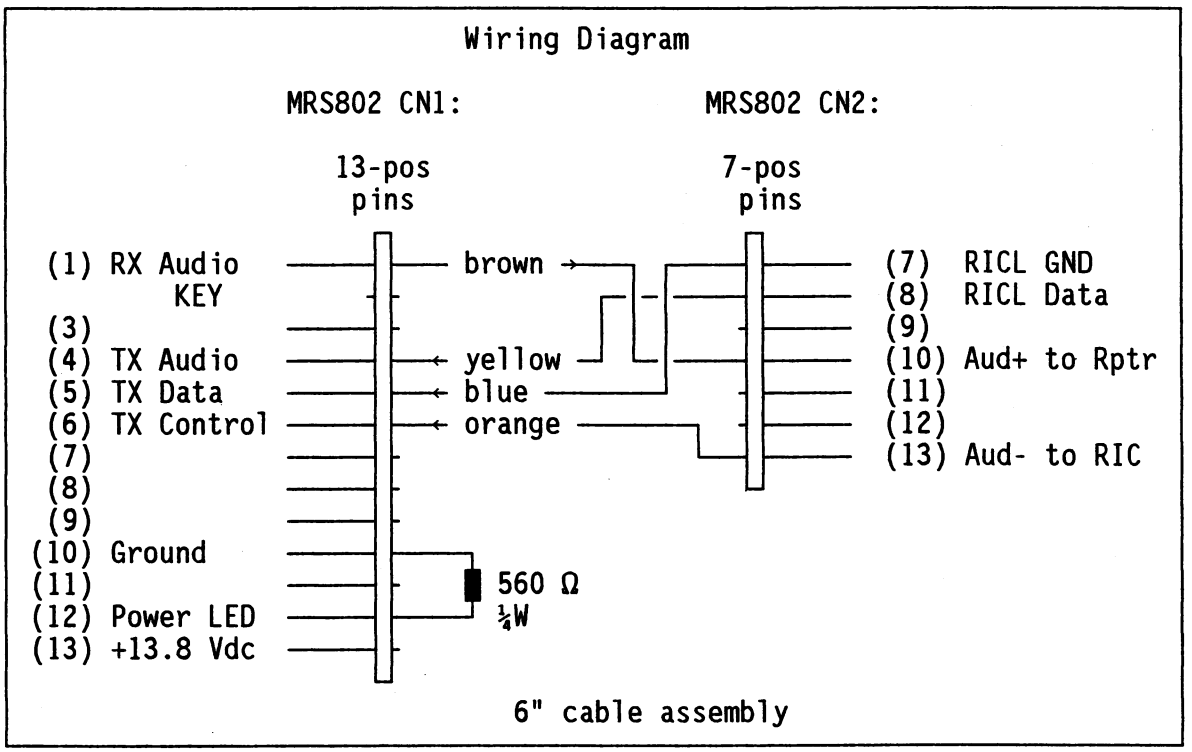

Figure 4-25 - Zetron/Uniden MRS802 Jumper Cable (P/N 709-7153)

[]7. Tuck the Zetron jumper cable under the main chassis plate, making sure that it does not short to the chassis.

[]8. Turn the DATA pot R32 on the Local Oscillator about 1/4 turn clockwise to get more adjustment range on the LTR transmit data deviation. Refer to Figure 4-26 to locate R32.

[]9. Replace the covers on the MRS802.

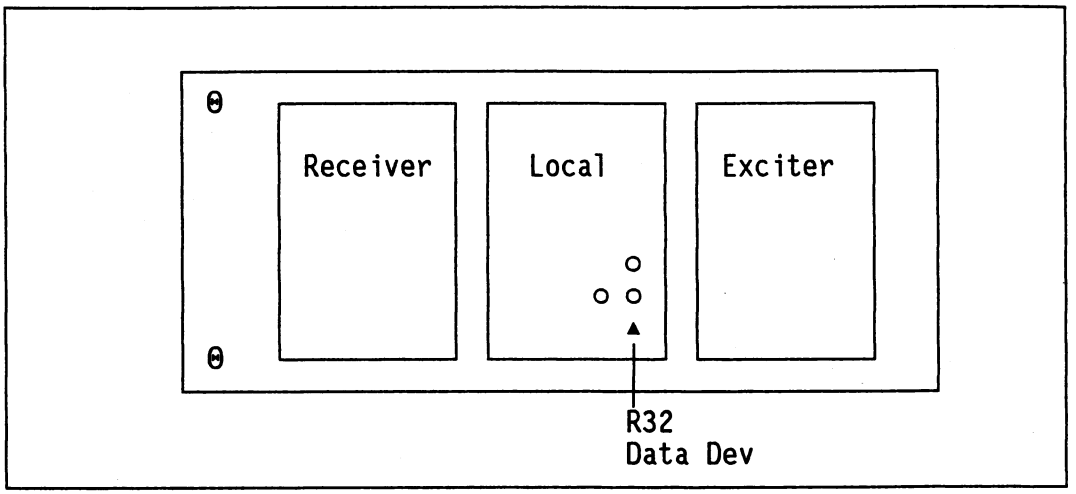

Figure 4-26. Uniden MRS802 Internal Sub-Chassis

[]10. Set the MRS802 front panel controls as follow:

VOLUME	Any position (receiver level to Zetron Model 42 is independent)
SQUELCH	Any position (squelch level is set in the Model 42)
REPEAT/LOCAL	Switch set to "IN" (repeat) position
OPT	Switch either position

[]11. Connect the Model 42 to the MRS802 ACC (ARX780) connector with the MRS802 Repeater cable (709-7147). Refer to Figure 4-27 for the wiring diagram of this cable.

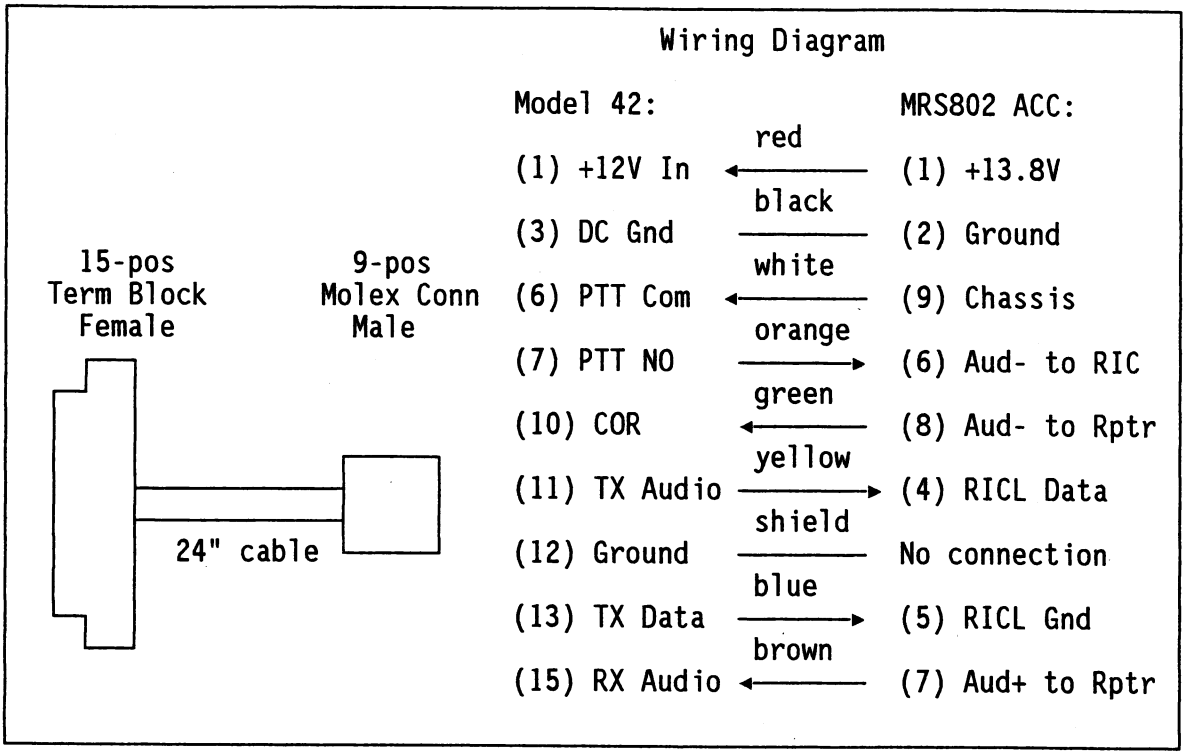

Figure 4-27. Model 42 to Uniden MRS802 Repeater Cable (P/N 709-7147)

[]12. Set the TX and RX audio and data levels by following the procedure described in "Step 5: Setting Repeater Levels" or "Step 5A: Setting Repeater Levels for V2+ Firmware".

Note: You can record your settings on the worksheets at the end of this section.

Step 5: Setting Repeater Levels

The following procedures are for the E.F. Johnson, Standard RP70K, Uniden MRS802, Tait, and Motorola Micor repeaters. Uniden MRS804 and Regency repeater level setting procedures are part of their modification instructions described in the previous subsection. For Model 42 units equipped with Version 2+ firmware, an alternate procedure is provided in the next subsection.

The following procedures are used to set the audio and data levels, for both transmit and receive. You will need a communications monitor and a test mobile or portable programmed for your repeater number and frequency.

If your repeater has internal Rx and Tx level adjustments that affect the Rx or Tx levels to or from the Model 42, set these levels according to the manufacturer's service manual. It will be helpful to mark these settings or note their positions for your future reference.

Included below is a step that sets the transmitter modulation limiter. If there is another recommended procedure, it may be used instead. **IT IS CRITICAL THAT THE MAXIMUM AUDIO DEVIATION DOES NOT EXCEED ±4 kHz** (assuming maximum 5 kHz channel deviation). If the maximum allowed channel deviation is other than 5 kHz, set the base station modulation limiter to a value that is equal to the maximum channel deviation minus the data deviation.

TRANSMIT LEVELS

[]1. Set your communications monitor to receive on the repeater's transmit frequency.

[]2. Disconnect the blue and green wires (pins 11 & 13) from the radio connector on the Model 42.

[]3. Connect a 1000-Hz audio oscillator between the blue wire (disconnected above) and the base station ground lead (pin 3 - radio connector on Model 42).

[]4. Set the Model 42 front panel DIP switch A:1 up and A:2 down, press the front panel CONNECT/DISCONNECT switch twice to force the Model 42 to reset and read the front panel switches. The Model 42 will enter the test mode and continuously transmit. (It would send the Test ID if the blue and yellow wires were connected.)

Note: A2 down transmits Test ID; A2 up transmits ID 253 (BUSY code).

During the following steps, verify that the Model 49 "Compat. Mode" is set to "J" (use the following screens: Multibase/Edit/Site Config/Compat. Mode [located near the middle of the screen]). If you need to change the setting, make note of the original setting.

[]5. While monitoring transmitter deviation with a service monitor, adjust the audio oscillator until the modulation level doesn't increase with any further increase in the output of the audio oscillator.

[]6. Double the output level of the audio oscillator (to insure that you are well into the transmitters limiter).

[]7. Adjust the transmitter modulation pot for 4.0 kHz (assuming 5.0 kHz total channel deviation). Disconnect the audio oscillator after adjustment is complete.

[]8. Reconnect the green lead to pin 13 of the Model 42 radio connector.

[]9. Adjust the Model 42 TX DATA for 0.95 kHz deviation.

[]10. Reconnect the blue lead to pin 11 of the Model 42 radio connector.

[]11. With the TX TONE pot set fully clockwise, adjust the Model 42 TX AUD for 4.5 kHz deviation during ring bursts.

Next, adjust the TX TONE pot for ringing to attain total carrier deviation of 3.0 KHz, or as preferred.

[]12. Set the front panel DIP switch A:1 down. Press and hold the disconnect switch until the Model 42 resets and reads the switches, thus exiting the test mode.

[]13. Set the Model 42 "Compat. Mode" to its original (prior to Step 4) setting (see Step 4 above).

INTERNAL SQUELCH LEVEL

[]14. Turn OFF all mobiles and handhelds in the area, and disconnect the RECEIVE antenna temporarily.

[]15. Adjust the COR adjustment on the main board to 6 o'clock, (screwdriver slot straight up and down).

[]16. Turn the SQ adjustment fully clockwise and observe that the CARRIER LED is on solid.

[]17. Slowly turn the SQ adjustment counter-clockwise until the CARRIER LED goes out.

RECEIVE LEVELS

[]18. Place an oscilloscope probe on test point 3 (TP3 is located in front of the front panel RX pot).

[]19. Set up your communications monitor to generate a receive carrier frequency at a level of 1 mVrms, and modulated by a 1 kHz tone at a carrier deviation of 4 kHz. Adjust RX AUDIO level on the main board so that you measure 1 V p-p on the oscilloscope.

[]20. Verify that DS1 [RX] and DS3 [QUAL] both illuminate via one of the following methods. The "Live Monitor" from multibase should show the ID on the repeater under test, with a "D" (Dispatch), indicating a valid programmed user type.

Note: if "21-nnn" (nnn = ID code) appears on the live monitor screen, then the User ID is "invalid" in the Model 42 database.

[]a. If your communications monitor is capable of generating LTR Data, setup to transmit a *valid Dispatch* ID code to the receiver modulated at 1.0 KHz deviation of the carrier frequency.

For more information, refer to *Model 49 Multibase Operation Manual* (Part No. 025-9173) or to *Model 49 Multibase, Version 6.1 or Above Operation Manual* (Part No. 025-9297).

TP3 should measure 240 mVpp (85 mVrms) - 360 mVpp (127 mVrms).
DS1 [RX] on solid: data from mobile
DS2 [TX] on solid: data to mobile
DS3 [QUAL] on flashing: RX data packets are valid

[]b. Alternately, verify operation using a mobile transceiver (Hand-Held is best in an RF repeater site) which has been programmed for a valid *Dispatch* ID code.

TP3 should measure 240 mVpp (85 mVrms) - 360 mVpp (127 mVrms).
DS1 [RX] on solid: data from mobile
DS2 [TX] on solid: data to mobile
DS3 [QUAL] on flashing: RX data packets are valid

[]c. Inject 100 Hz sinewave modulated at 800 Hz deviation. TP3 should show approximately 240 mVpp (85 mVrms). No LTR decoder validation will occur.

TP3 should measure approximately 240 mVpp (85 mVrms).
DS1 [RX] off: (sinewave not decoded as data)
DS2 [TX] off: (no Rx Data, then no Tx Data)
DS3 [QUAL] off: RX "data" packets are not valid from sine wave

[]21. Proceed to "Step 6: Making Trunking Connections."

Step 5A: Setting Repeater Levels for V2+ firmware

The Test Mode operation and Test Tone levels have been changed in this firmware upgrade to facilitate proper FCC adjustments of LTR repeater operations. This set of instructions relates correct procedures and level settings only for those Model 42 units equipped with version 2.00 or higher firmware (U29, U31), and the required associated Tone Generator ASIC (U17) version 1.4. Option Bytes of these IC chips are "matched" so that upgrade sets must therefore be carefully installed without intermixing. Improper test tone operation may indicate mismatched IC sets.

The new Model 42 Test Mode utilizes four operational states as listed below:

Test Mode 1:	Transmit Zetron Ringing with Data
Test Mode 2:	Transmit Data Only
Test Mode 3:	Transmit 1 KHz Test Tone with Data
Test Mode 4:	Transmit 1 KHz Test Tone Only

INTERNAL SQUELCH LEVEL

[]1. Turn off all mobiles and handhelds in the area. Disconnect the receive port antenna temporarily.

[]2. Adjust the COR adjustment on the main board to six o'clock (screwdriver slot straight up and down).

[]3. Turn the SQUELCH adjustment of the main board fully clockwise and observe that the CARRIER LED is on steady.

[]4. Turn the SQUELCH adjustment *slowly* counter-clockwise until the CARRIER LED goes off steady. Do not set beyond this point.

RECEIVE LEVELS

[]5. Connect an oscilloscope probe to test point 3 (TP3 is located behind the RX AUD pot on the PCB) with the ground referenced at TP8 (TP8 is located to the right of C60 (3300 μF) near the center rear of the board).

[]6. Connect a Communications Service Monitor Tx Output directly to the repeater Rx antenna port. Inject the appropriate RF carrier frequency at a level of 1 mVrms (-47 dBm), modulated by a 1.0 KHz sine wave at 3.5 KHz deviation. Adjust the RX AUD pot on the main board until 1.0 Vpp (354 mVrms) is measured at TP3 on the oscilloscope. This should be an undistorted sine wave. Signal distortion indicates probable repeater Rx tuning required.

[]7. Change the modulation signal to a 100 Hz sine wave at 1.0 KHz deviation. TP3 should have approximately 240 mVpp (85 mVrms).

[]8. Disconnect the Service Monitor and reconnect the Rx Antenna coaxial cable.

TRANSMIT LEVELS

[]9. Verify the repeater modulation limiter setting:

[]a. Set the Communications Service Monitor to receive the repeaters transmitted signal and attach a receive antenna to the Service Monitor input port.

[]b. Connect a 1 KHz Sinewave Generator to the Tx Audio input of the repeater. Typically a generator capable of 10 Vpp output (max) is adequate for this task.

[]c. Key the repeater.

[]d. Verify undistorted modulation when at 3KHz deviation (well below normal limiting), and that deviation limiting occurs at 4.5 KHz when generator output is increased.

[]e. If 4.5 KHz limiting does not occur, adjust the generator until hard limiting occurs (sinewave peaks are flattened), and re-adjust the repeater deviation limiter for 4.5 KHz maximum deviation.

[]f. Unkey and disconnect the tone generator. Leave the Service Monitor setup for step 2.

[]10. Set Transmit Data Level:

[]a. Place the Model 42 into Test Mode by pushing dipswitch SW1-1 up and resetting the Model 42 (press and hold the connect/disconnect switch for about 2 seconds or until the POLL, SYNC, DIGIT, MODEM, and ALARM LEDs flash).

[]b. Test Mode 1 should initialize, wherein ringing and data are transmitted from the repeater/Model 42.

Note:
SW1-2 UP: Generates Test ID = 253 (Channel Busy)
SW1-2 DOWN: Generates Test ID from Multibase Rptr Config

[]c. Select Test Mode 2 (Tx Data Only) by pressing the Connect / Disconnect switch twice (not too fast, or the unit will reset).

[]d. Adjust the Tx Data pot on the main board to attain 1.0 KHz deviation of data modulation as indicated by the Service Monitor.

[]11. Set Transmit Audio Level from the Model 42:

[]a. Select Test Mode 4 (1 KHz Tone without Data) by repeatedly pressing the Connect / Disconnect switch twice slowly (wait briefly between pairs of pushes).

[]b. Set TX AUD fully clockwise.

[]c. Monitor TP4 using an oscilloscope or multimeter while adjusting TX TONE until 250 mVpp (88.4 mVrms) is attained. (The service monitor should show approximately 1.0 KHz deviation.)

[]d. Adjust the TX AUD pot on the main board counter-clockwise until the 1 KHz tone modulation reaches 1 KHz carrier deviation as indicated on the communications service monitor.

[]e. Exit Test Mode by placing dipswitch SW1-1 down and depressing the CONNECT/DISCONNECT switch until the LEDs flash.

[]12. Proceed to the next subsection.

Step 6: Making Trunking Connections

[]1. Connect the Repeater Bus by daisy chaining (Repeater Bus channel 1 to Repeater Bus channel 2, etc.) shielded BNC cables among all logic units.

[]2. Connect the Subscriber Bus by daisy chaining (Subscriber Bus channel 1 to Subscriber Bus channel 2, etc.) shielded BNC cables among all *Zetron* logic units.

More detailed descriptions of these buses and their configurations are provided in "Trunking Connections in Detail" later in this section.

Step 7: Testing Dispatch Calls

When the memory is cleared, the Model 42's default program will make all IDs valid for dispatch calls, since "unassigned" users are defined as valid by firmware defaults. This fact allows us to test dispatch calls.

Note: if the "Unassigned Users" are set as "invalid" in the "Site Configuration" window of the "Edit" column, specific Dispatch ID codes will have to be entered and validated into the "User" table.

For more information, refer to *Model 49 Multibase Operation Manual* (Part No. 025-9173) or to *Model 49 Multibase, Version 6.1 or Above Operation Manual* (Part No. 025-9297).

[]1. Program two mobiles with the same ID for dispatch.

[]2. Key up the first mobile. The carrier and transmit LED on the front of the Model 42 should come on.

[]3. While the mobile is keyed up the second mobile should hear what the person on the first mobile is saying.

Step 8: Testing Trunking

To test trunking it is necessary that two mobiles are programmed with two different dispatch IDs. These IDs should be homed on the same channel.

[]1. Use *Model 49 Multibase Operation Manual* (Part No. 025-9173) or *Model 49 Multibase, Version 6.1 or Above Operation Manual* (Part No. 025-9297) to program site configuration and repeater configuration.

[]2. Check the IDs programmed into the mobiles by testing each mobile one at a time for dispatch. Verify that they home on the same channel.

[]3. Key up the first mobile. The home channel's transmit and carrier LEDs should come on. With the first mobile still keyed up, key up the second mobile with the second ID. At this time one of the other Model 42s on the system should have its transmit and carrier LEDs on.

[]4. While keeping the second mobile keyed, *unkey* the first mobile. The second mobile should stay on the trunked-to channel, while the home repeater should remain transmitting "GO-TO" packets for the second mobile.

[]5. Unkey the second mobile. Both repeaters should drop to receive status.

Step 9: Programming Users and Time
To finish installing the system all of the user information needs to be programmed in for individual customers. Refer to *Model 49 Multibase Operation Manual* (Part No. 025-9173) or to *Model 49 Multibase, Version 6.1 or Above Operation Manual* (Part No. 025-9297).

Some of the advanced operating features of the Model 42 utilize its built-in clock chip that keeps track of the time of day and day of week. These features include deferred access during non-prime time, air time accumulation during prime and non-prime time, repeater loading statistics by the hour, all repeaters busy statistics by the hour.

The clock chip is built into the socket underneath memory chip U27 and keeps time even during power failures. You set the clock by selecting "Other" in the Multibase Comm Menu. When the detailed Other Menu comes up, select "Set Date & Time."

Multibase will connect to the site selected and allow you to set the time and date while you are connected (on-line) to the Model 42. You can set the clock for the site's local time. This may be different from your office clock.

Note: The time and date are automatically cloned to all Zetron units at the site which are connected to the Zetron Subscriber bus. Additionally, the slaves are all reset by the Master Model 42 at midnight daily to ensure consistent clock synchronization between repeater controllers for billing purposes.

HINT

Before you leave the repeater site, turn around and take one last look at the Model 42 front panel LEDs.

On the Subscriber Master unit (switch B:1=ON - left-hand switch on group of 8), the POLL LED should be almost steady. Some flashing may be detectable.

On the Subscriber Slave units (switch B:1=OFF), the POLL LED should flash briefly in response to the master.

Note: For specific information about your repeater, see individual subsections in this section. If your repeater is not listed, contact Zetron for assistance.

TRUNKING CONNECTIONS IN DETAIL

After you have tested each Model 42 connected to its designated repeater operating in "single channel trunking", connect it to other logic units and make sure that they "trunk" and work properly with all of your channels.

Here is a simple checklist to make sure you have set up your system:

[]1. Set the Bus Jumpers in all Zetron Model 42s for electrical and timing compatibility with E.F. Johnson HDB or Uniden RNDL buses as follows:

JP12 Subscriber Bus Termination
A=EFJ 100 ohm pull-down B=Uniden 100 ohm pull-up C=jumper storage
JP13 Repeater Bus Termination
A=EFJ 100 ohm pull-down B=Uniden 100 ohm pull-up C=jumper storage
JP14,16 Subscriber Bus Electrical
A=EFJ hardware B=Uniden hardware
JP15,17 Repeater Bus Electrical
A=EFJ hardware B=Uniden hardware
JP18 Repeater Bus Timing
A=EFJ HDB B=Uniden RNDL

Note: The Zetron Subscriber Bus will operate with EFJ or Uniden Hardware compatibility. For safeguards in case the repeater and subscriber buses get cross-connected by accident, set jumpers JP12-JP18 all to A or B. Then both buses will have same electrical characteristics. You only need one resistor on each bus.

[]2. Connect the daisy-chain Repeater Bus shielded BNC cables among all logic units.

[]3. Connect the daisy-chain Subscriber Bus shielded BNC cables among all logic units.

[]4. Terminate <u>one end</u> of each bus with a 100 ohm resistor.

For E.F. Johnson, the termination is a resistor to ground. Like the terminators shipped with EFJ LTR systems, you can use a BNC connector with a resistor soldered inside of it. On Model 42s you can set JP12 and JP13 in one of the units for termination. Refer to Figure 4-28.

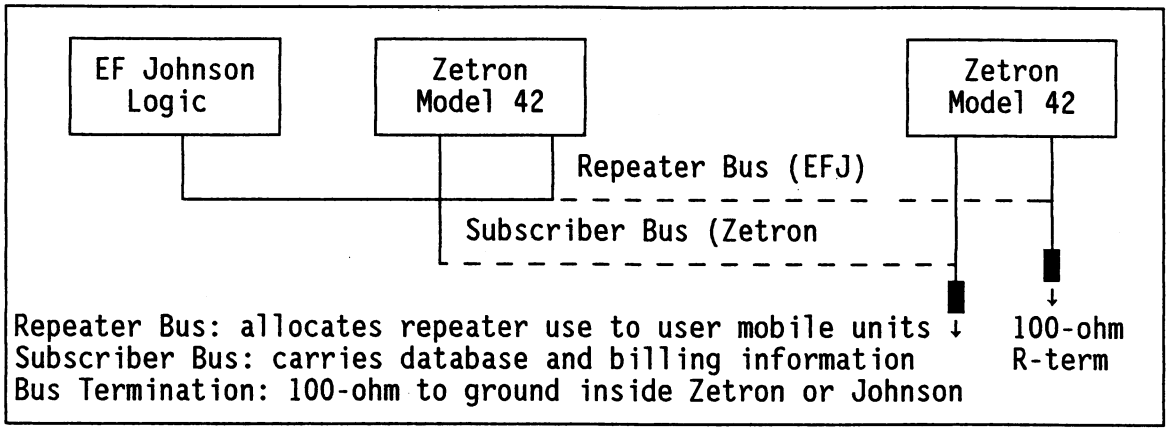

Figure 4-28. Model 42 Trunking Buses (Johnson Compatible)

For Uniden, the termination is a resistor connected to +5 volts. On Uniden MRS804 and MRS802 repeaters, you connect the resistor by leaving the pink wire loop intact on connector CN2 one of the logic units (on other units, cut the wire loop). On Model 42s, you can set JP12 and JP13 in one of the units for termination. Refer to Figure 4-29.

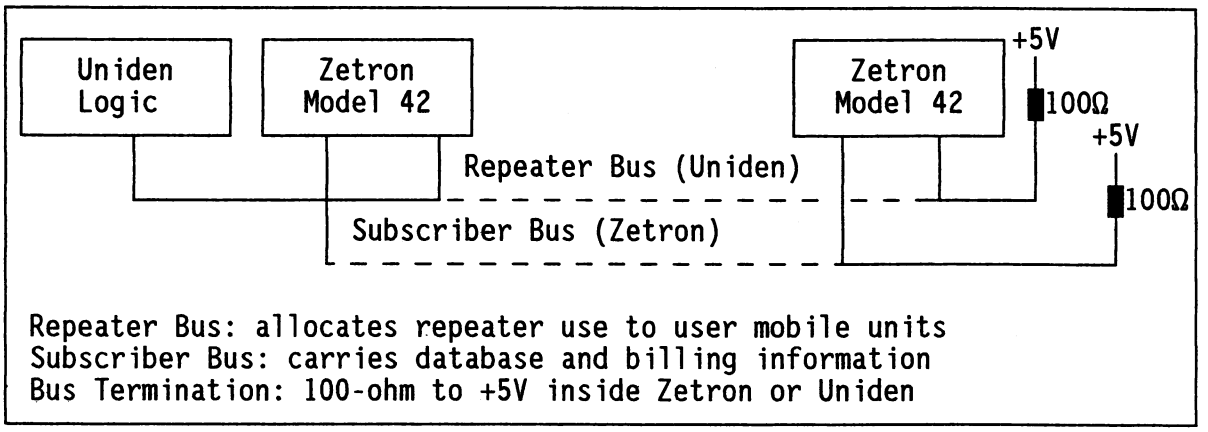

Figure 4-29. Model 42 Trunking Buses (Uniden Compatible)

[]5. Set the DIP switch on <u>one</u> logic unit on the Repeater Bus Sync to be Master and all other units to be Sync Slaves. On the Zetron Model 42, this is switch B:2 Master=Up, Slave=Down (8-position switch, 2nd position from the left). See the DIP switch diagram in "Hardware Layout" near the end of this section. Refer to your EFJ or Uniden manuals for information on their switches.

[]6. Set the DIP switch on <u>one</u> Zetron unit to be the Subscriber Bus Poll Master and all other units to Poll Slaves. This is switch B:1 Master=Up, Slave=Down (8-position switch, first position on the left). See the DIP switch diagram in "Hardware Layout" near the end of this section.

[]7. Set the Area DIP switch to be the same on every unit (area 0 or 1). On the Model 42 this is switch B:3 Area 1=Up, Area 0=Down (8-position switch, 3rd position from the left). Refer to your EFJ or Uniden manuals for information on their switches.

[]8. Set the DIP switches on each unit to the unit's assigned repeater number. On the Model 42, the switches are B:4 through B:8 (the right-most five positions of the 8-position switch) and are coded in binary. See the DIP switch diagram in "Hardware Layout" near the end of this section. Refer to your EFJ or Uniden manuals for information on their switches.

Note: Only repeater numbers 1 through 20 are valid; other settings will stop a logic unit from working.

[]9. Program the Repeater Config information in Multibase for all repeater channels, including non-Zetron ones. Update all of your Zetron Model 42s and 49s so that they know about all of the channels.

[]10. Set the Validate DIP switch A:2 (4-position switch, 2nd position from the left) on Zetron Model 42s as follows:

If all of your Zetron logic units are performing their own validation from Multibase settings, set the Validate DIP switch A:2=Down on all Zetron units. The units will also check for validation information from a "validator box" should it place information in slot 21 of the Repeater Bus.

If you want a Zetron Model 42 to act as a "validator box" for non-Zetron units, then you must make a Zetron unit the Repeater Bus Sync Master (step 5 above). On the Zetron Sync Master unit B:2=Up, set its Validate DIP switch A:2=Up. On all other Zetron units, set the Validate DIP switch A:2=Down.

If you have a "validator box" and want to use it exclusively for validation for your Zetron units (Zetron units will ignore Multibase validation bits), then set the Validate DIP switch A:2=Up on all of the Zetron units. In addition, the Repeater Bus Sync Master cannot be a Zetron unit, so all of the Zetron units should have switch B:2=Down.

[]11. If you are using the Model 42 to validate users on non-Zetron channels, you must program the IDs with Multibase into the User ID database. This can be a time-consuming task when you only want to invalidate a few users.

To make your job easier, the Model 42 can treat all unprogrammed user IDs as automatically Valid or Invalid. Program the "Unassigned Users" in the Site Config database as you wish. Then, you only have to program the particular users in the User ID database that are opposite to your unassigned default choice.

HARDWARE LAYOUT

Figure 4-30 shows the Model 42 connections and adjustment points.

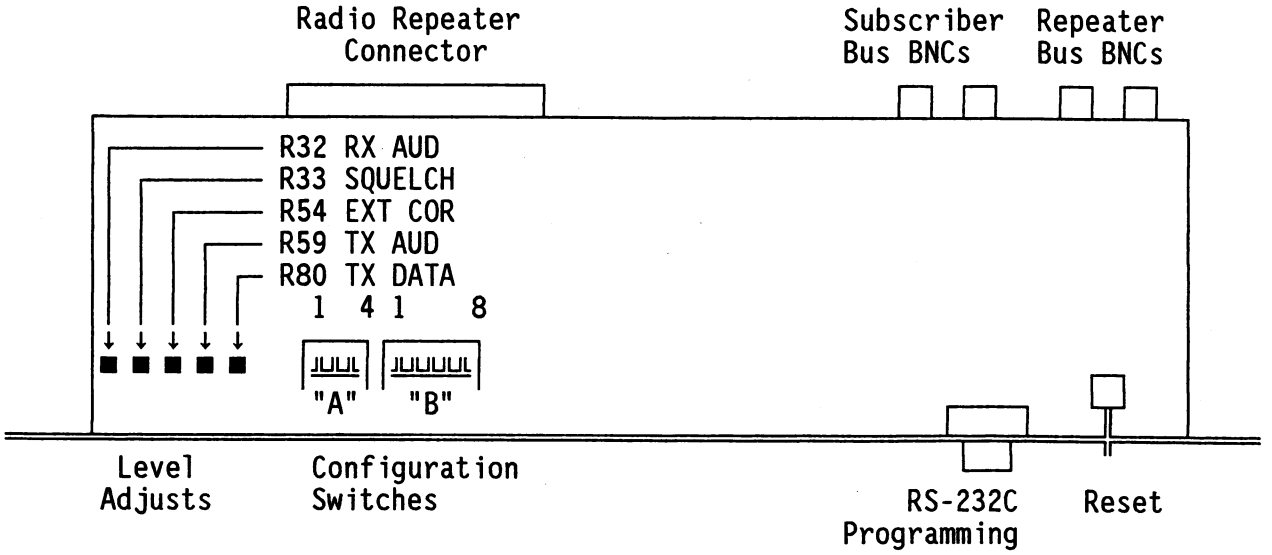

Figure 4-30. Connections and Adjustment Points

Figure 4-31 shows the location of the rear panel screw.

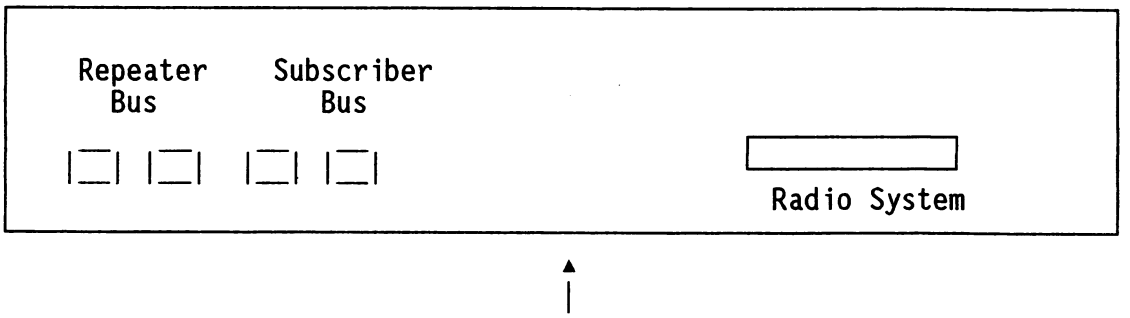

Figure 4-31. Location of Rear Panel Screw

Figure 4-32 shows the configuration of the dip switches.

Figure 4-33 shows the location of pots, lights, and switches.

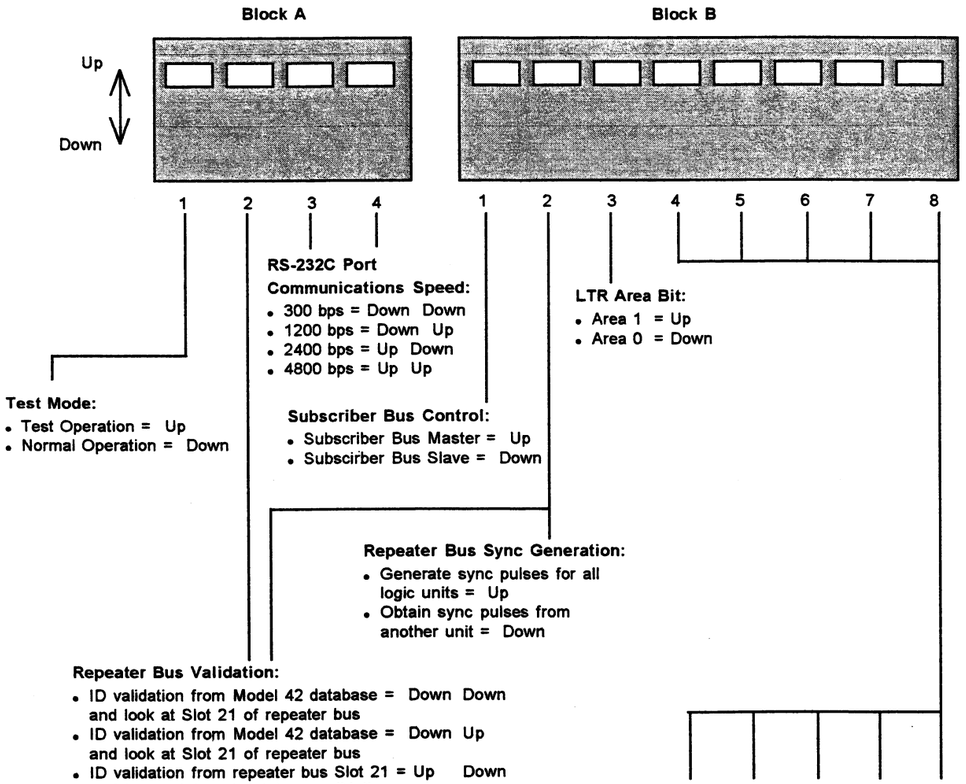

Model 42 DIP Switches

Figure 4-32. Dip Switch Configuration

Model 42 Pots, Lights and Switches

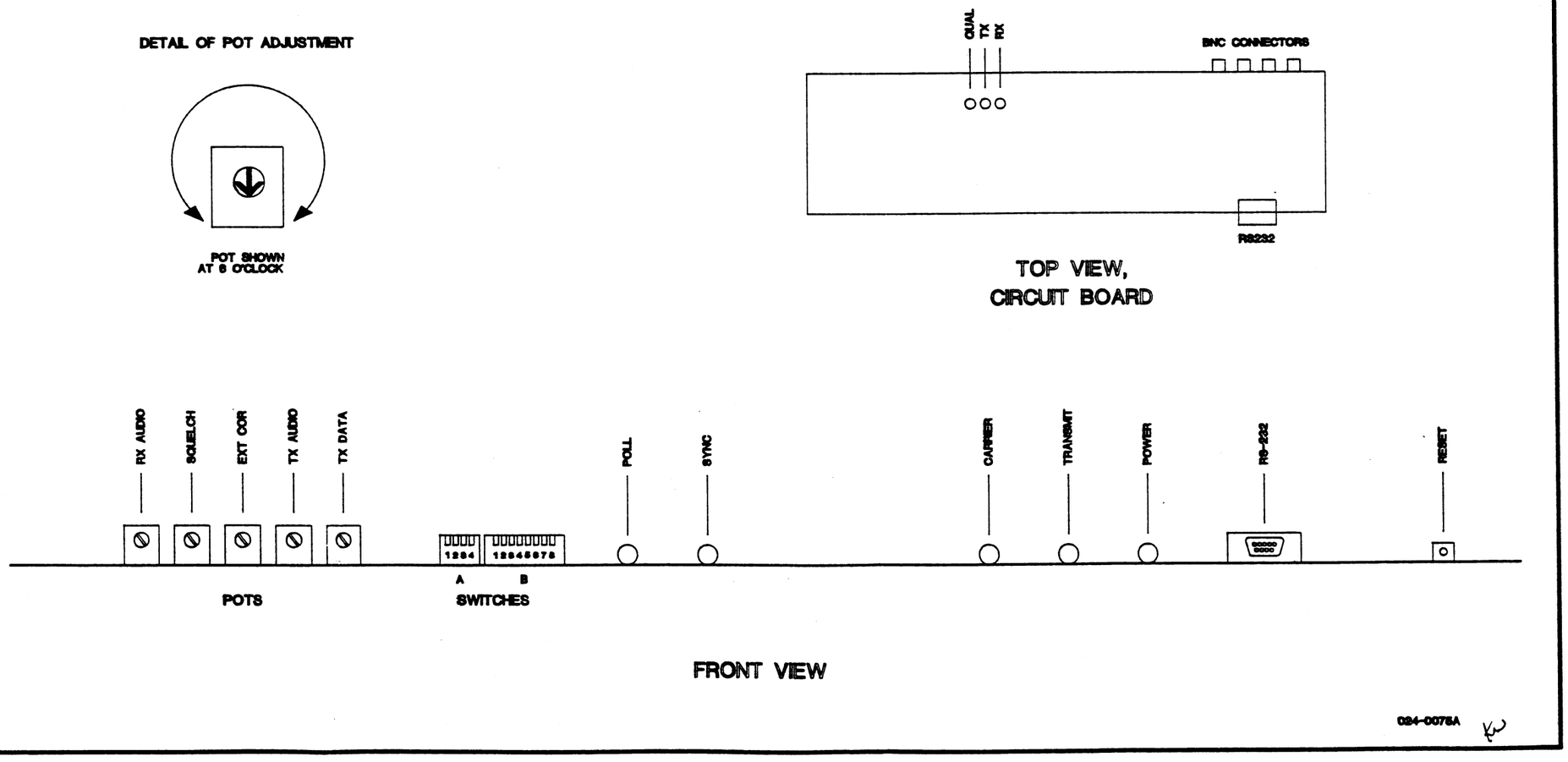

Figure 4-33. Location of Pots, Lights, and Switches

MODEL 42 INSTALLATION WORKSHEET

Use this page to record installation settings for future reference.

Site Location: _____

Repeater Number: _____

Install Date: _____

Main Board, Part No. 702-9471 rev:_____

Pot Settings on Main Board

Pot Name	Label	Setting
RX Audio Level	R32	____ o'clock
Internal Squelch	R33	____ o'clock
EXT COR Threshold	R54	____ o'clock
TX Audio Level	R69	____ o'clock
TX Data Level	R80	____ o'clock

Configuration DIP Switch Settings (behind front panel cover)

Block A:					Block B:							
Up	—	—	—	—	—	—	—	—	—	—	—	—
Down	—	—	—	—	—	—	—	—	—	—	—	—
	1	2	3	4	1	2	3	4	5	6	7	8

LTR SITE CONFIGURATION WORKSHEET

Repeater Bus

___ E.F.J. Bus ___ Uniden Bus

Sync master is channel ____ Termination resistor is on channel ____

Validation is Zetron channel ____ or other unit (brand/model) _____

Repeater numbers are set on dip switches in each logic unit ___

System is set for area: ___ 0 ___ 1

Subscriber Bus

Poll master is channel ____ Termination resistor is on channel ____

Air Time Billing

___ ZEBRA ___ Uniden ARX-850 ___ Radio-Pac _____ Other

Other Options

Morse ID is generated by channel _____
Other equipment installed _____

Repeater Channels

Repeater Number	Repeater RF Brand/Model	Logic Unit Brand/Model	Interconnect Brand/Model	Air time Accumulation
1				
2				
3				
4				
5				
6				
7				
8				
9				
10				
11				
12				
13				
14				
15				
16				
17				
18				
19				
20				

5. GENERAL HARDWARE INFORMATION

Software update 5-1

Simple update installation 5-2

Full update installation 5-3

Test mode 5-4

Front panel lights 5-5
- Main board lights 5-5
- Ltr protocol lights 5-5

Repeater connections 5-6

Repeater timing 5-7
- Keyup delay 5-8
- COR hold time 5-8
- COR mute time 5-8
- Packet loss time 5-8
- Repeater hold time 5-8
- Repeater timeout timer 5-8

Assigning dispatch and interconnect channels 5-9
- Smart free channel allocation 5-9
- All Zetron channels 5-9
- Johnson and Zetron interconnect 5-9
- Uniden and Zetron interconnect 5-9

Repeater sharing 5-10

5. GENERAL HARDWARE INFORMATION

SOFTWARE UPDATE

> **CAUTION**
> If you have more than one Model 42, you must update all of your units to the same revision of main software (U31 chip) so that the units are compatible with one another. Revise any Model 49s to be compatible with the new Model 42 software. Model 49 Version 4+ requires Model 42 Version 1+ or 2+. Model 49 Version 6+ requires only Model 42 Version 2+.

When a factory update is shipped for installation into the Model 42, new software chips that contain the operating software may have to be changed. The software is generally contained in one chip with 28 pins to be plugged into socket U31 (see Figure 5-1).

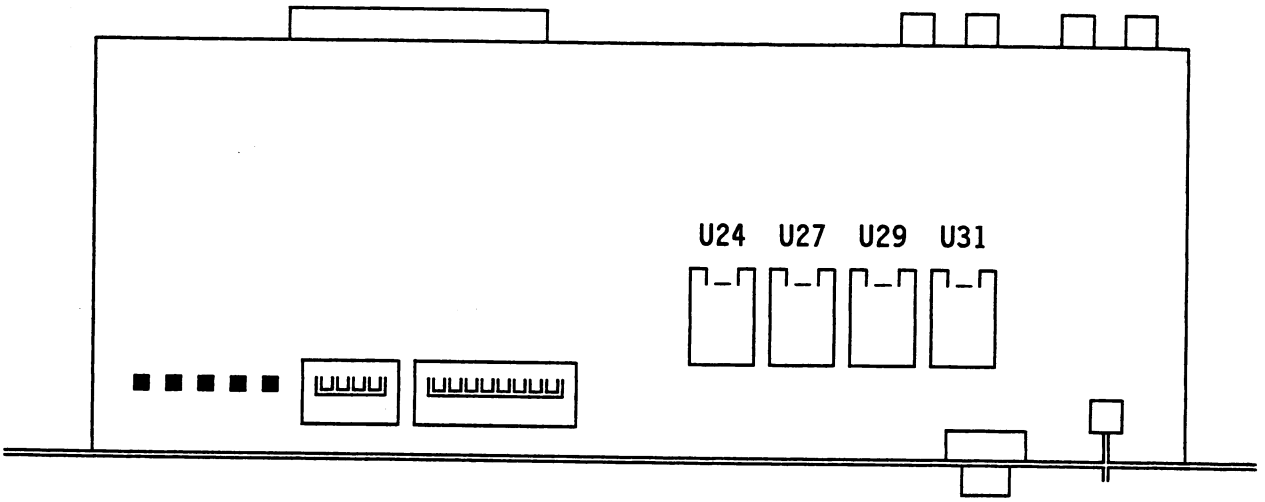

U24 = RAM
U27 = RAM + Clock
U29 = PROM
U31 = PROM

Figure 5-1. Physical Location of RAM and PROM Chips

The label(s) on your software PROM(s) contain important information and look like this:

```
(C) 1992 Zetron
Model 42 V1.0 A
Zxxxxx 11/11/92
U31 601-0435 yyy
```

The software version number is the "1.0" following the letter "V". The last character on the line determines compatibility with the revision of main board hardware (702-9471).

The "xxxxx" is your sales order number and should match the PROM that you are removing from the unit. The last line reminds you that the chip goes into socket location U31 and contains options "yyy". As of this writing, this information will be blank.

If you are updating the software PROM, follow the instructions in the next subsection, "Simple Update Installation." If you also have to change your Multibase programming, refer to both "Simple Update Installation" and "Full Update Installation" subsections.

> HINT
> Read all of the following instructions and call Zetron for clarification before starting your update.

SIMPLE UPDATE INSTALLATION

> CAUTION
> If your update requires a new Multibase, refer to the instructions in the next subsection also. Installing new versions of software can erase your air time accumulation records inside the Model 42s.

1. Disconnect the Repeater Bus and Subscriber Bus cables from the back of the Model 42 you are to update.

2. Power off the unit and remove it from its installed location so you can work on it. Remove the top cover to expose the main circuit board.

3. Remove the old PROM U31 and replace it with the new one.

   Note: Be sure that the orientation notch on the new PROM matches the white ink outline on the circuit board.

4. Take some time to look carefully at all of the pins of the chip that you have installed. Be sure that all the pins are in their proper places, fully inserted, and not bent underneath.

5. Turn on the power and make sure that the front panel lights activate properly.

6. Reconnect the Repeater Bus and Subscriber Bus cables in the back.

7. Perform a Memory Soft Reset.

8. In about 30 seconds, the POLL light on the Subscriber Master may pulse about once per second as it clones its new data into the Model 42. The full data cloning takes about 2 minutes -- be patient. Cloning may not be necessary.

9. Using your mobile or portable radio, make sure that the unit performs its trunking radio function.

10. Replace the top cover of the unit.

11. Return the old part to Zetron in protective packaging.

FULL UPDATE INSTALLATION

> CAUTION
> Use this procedure to retrieve the Model 42 RAM contents before doing your update. This will put your Air Time Accumulators and Repeater Loading data into your office computer.

1. Retrieve accumulators and repeater loading data (if the information is important to you) using "Comm Retrieve" from Multibase on your office computer. Backup your data to floppy diskettes with the Backup menu item.

2. Install your new Multibase by running the INSTALL program on the floppy diskette from Zetron. It will ask you questions and guide you through the installation process. The installation will create backups of your old database data files in case you need them.

3. Run Multibase and fill in any fields that apply to your new option.

4. If you are going out to the site to install the chips, have an assistant available at your office computer to load the new database settings into the site.

5. Install your new hardware as follows:

> CAUTION
> Be sure that the orientation notch on each integrated circuit matches the white ink outline on the circuit board.

   a. Remove the old PROM U31 and replace it with the new one.

   b. If you have received a new Tone Generator, Zetron P/N 601-0224, remove the IC in U17 and replace it with the new one. If you have received a new Protocol Processor, Zetron P/N 601-0199, remove the IC in U13 and replace it with the new one.

c. Take some time now to look carefully at all of the pins of the parts you have installed. Be sure that all the pins are in their proper places, fully inserted, and not bent underneath.

6. Disconnect the Repeater Bus and Subscriber Bus cables from all of the Model 42s and Model 49s.

7. Perform a Memory Hard Reset to each Model 42 and Model 49.

8. Reconnect the Repeater Bus and Subscriber Bus cables to all Model 42s, Model 49s and non-Zetron logic units.

9. Leave all of the Zetron units powered off, except channel that is set as the Subscriber Master Unit (the one with switch B:1 ON). Observe the front panel lights. The POLL light should come on steadily, indicating that this unit is the Subscriber Master.

10. Power up each Model 42 and Model 49 and do a Memory Soft Reset.

11. Have your assistant use Multibase to perform a Comm Update All Data to load the database settings into the master unit. Messages in the Status window on the office computer should show a successful update of that one channel.

12. During the update, the POLL light on the Subscriber Master should pulse about once per second as it clones its new data into all of the Model 42s and Model 49s. The full data cloning takes about 2 minutes -- be patient.

    If cloning does not work, double check the connections on all of your BNC cables running among the Repeater Buses and the Subscriber Buses. Also try cycling power off then on to the Subscriber Master Unit to make it locate all of the slave units and perform the cloning operation.

13. Using your mobile or portable radio, make sure that the system performs its trunking radio function.

14. Return the old parts to Zetron in protective packaging.

TEST MODE

The test mode can be enabled in the Model 42 using the front panel DIP switches A:1 and A:2. To enable the test mode, set switch A:1 up, A:2 down. The Model 42 will continuously transmit the test ID code that has been programmed in the Multibase Repeater Configuration screen and send "ringing tones" out the transmitter.

FRONT PANEL LIGHTS

Main Board Lights

These lights are labeled on front panel.

POLL Indicates polling activity on the Zetron Subscriber Bus between Model 42s and 49s. If the Model 42 has been designated as the Master (switch B:1 Up), then the POLL light will be ON steady. The poll light on the slave units (switch B:1 Down) will flash when polled by the master unit.

During database cloning, the POLL light will flash briefly about once per second. Cloning of the full database takes approximately 2 minutes. If a POLL light is not lit, check cabling on both buses for continuity and terminating resistors.

SYNC This LED responds to the high-speed Repeater Bus and indicates sync activity. If the Model 42 has been designated as the Sync Master (switch B:2 Up), then the SYNC light indicates that sync is being generated. The SYNC lights on all of the slave units (switch B:2 Down) show that they are receiving sync from the master.

If a sync light is not lit, check the Repeater Bus cabling for a break in continuity or a missing bus terminating resistor. On E.F. Johnson logic, the sync light is labeled SYNC; on Uniden it's labeled RCD.

CARRIER This LED lights when the Model 42 has detected RF carrier from the repeater. Also refer to jumper settings on JP7.

TRANSMIT This LED lights when the Model 42 has activated PTT (push-to-talk) to put the repeater into transmit.

POWER This green LED lights when 12V power is present to the Model 42.

LTR Protocol Lights

These three LEDs are visible when the Model 42 top cover is removed.

RX VALID (QUAL)
(DS1) This LED lights when an accurate subaudible data packet is received from the LTR mobile through the repeater. This light turns off when a packet error is received or when the RF carrier drops.

TX PACKET (DS2) This LED lights when the Model 42 is transmitting LTR subaudible data packets to the LTR mobile through the repeater.

RX PACKET (DS3) This LED lights when a sync code pattern is recognized in the received subaudible data packet from the LTR mobile through the repeater. The light turns off at the end of a packet.

REPEATER CONNECTIONS

Use a shielded cable between the Model 42 rear panel terminal block and your radio repeater equipment. This terminal block is detachable, so you or Zetron can pre-wire cables for fast installation and service.

Figure 5-2 shows the signals available at the Model 42's radio connector.

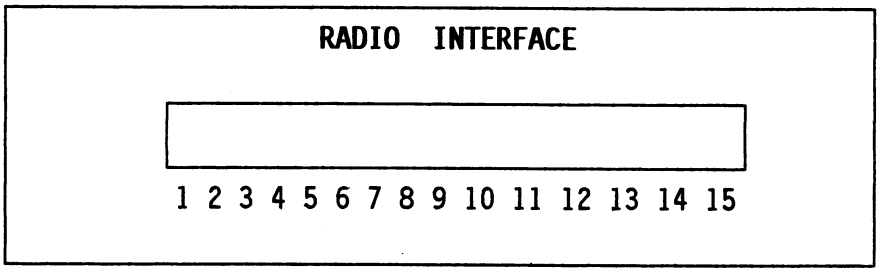

1 = AC/+12V	9 = SENSE 1
2 = AC	10= EXT COR IN
3 = DC GND	11= TX OUT
4 = GND	12= GND
5 = PTT NC	13= SUB OUT
6 = PTT COM	14= GND
7 = PTT NO	15= DISC IN
8 = CTL 1	

Figure 5-2. Model 42 Rear Panel Radio Connector

AC/DC Power Apply 10.5 to 14 VAC between pins 1 and 2 or apply 12 to 15 VDC between pins 1 and 3.

PTT Relay Obtain contact closure on pin 6 to key the transmitter. Connect return lead to pin 5 or 7. The relay life is about 7 years when the idle packet timer is set for every 10 seconds in Multibase. If you wish to use open collector transistor PTT drive in parallel with the relay contacts, solder a wire jumper in position JP5 (left of relay K1) on the Model 42 main card.

CTL 1 Used when the Model 42 is sharing the repeater with another controller.

SENSE 1 Used when the Model 42 is sharing the repeater with another controller.

COR Apply carrier indication from the receiver, if available, to pin 10. This input is normally only used if discriminator audio is not available. One of the two External COR settings on JP7 needs to be selected. If discriminator audio is used and the "INT SQ" setting is selected on JP7, then this input is not connected.

TX OUT Pin 11 is transmit audio from the Model 42 to the repeater exciter. Set jumper JP6 for coarse level (A=high, B=low), and adjust front panel pot for fine level. Set jumper JP2 for transmit audio flatness (A=flat, B=deemphasis for microphone inputs).

SUB OUT Pin 13 is subaudible transmit data from the Model 42 to the repeater exciter. Set jumper JP3 (TX subaudible level out) for level (A=high, B=low). Inject this 10 Hz to 150 Hz signal into the DPL/DCG input on your transmitter. Adjust the TX Data level as described in Section 4, Step 5.

Note: Make sure your transmitter can handle low frequency DPL data!

DISC IN Apply audio from the repeater receiver to pin 15. The signal bandwidth should be 10 Hz to 10 kHz, containing high frequency noise, voice audio, and subaudible data. Set jumper JP4 for signal gain (A=20, B=0). Set jumper JP1 for receive audio flatness (A=deemphasis for discriminator, B=flat). Adjust the RX Audio and RX Data levels on the front panel as described in Section 4, Step 5.

Note: Use discriminator audio from the receiver's 2nd IF, ahead of any squelch circuitry.

Shield Ground your cable shield at only one end, preferably the Model 42 end.

Ground Do not rely on the cable shield to carry ground. Use pin 3 for power ground, pin 4 for PTT return, and pins 12 and 14 for any twisted ground signals. Do not combine high PTT keying current inputs onto the same ground wire as your low level audio or data signals.

Note: Repeater cables are available from Zetron for popular repeaters (contact a Zetron sales engineer).

REPEATER TIMING

There are two important settings in the Site Config and Repeater Config databases that relate to operational timing settings for your repeaters. You need to make sure that these settings are correct for your system; otherwise, you will experience problems such as mobiles failing to access the system, audio squelch tail, dropped calls, etc.

Zetron engineers could probably have made these values fixed, but that might not have worked with every repeater. The two settings of concern are shown below along with the Zetron recommended values:

Keyup Delay	0.02 sec (Repeater Config)
COR Hold Time	0.30 sec (Site Config)

Keyup Delay
The Keyup Delay is the time from the Model 42 closing the PTT relay to transmit, until it begins sending LTR data packets to the mobile. Any repeater suitable for trunking must be able to come to full power in less than 0.1 sec (100 milliseconds). This is necessary for the fast LTR handshaking that occurs each time a mobile user presses PTT. Due to software processing delays, the Model 42 adds about .01 to .02 sec (10 to 20 milliseconds) to the value programmed in Multibase. The recommended total delay becomes about 35 milliseconds. Lengthen this time if you are sure that your repeater is slow. If you make it too long or too short, however, mobiles will not "get in" on the first try.

COR Hold Time
The COR (carrier squelch) Hold Time is the time from the Model 42 losing mobile carrier, until the Model 42 considers that the mobile is done transmitting. This time is used by the Model 42 whenever the mobile RF signal fades without a normal "turn off" packet. If the RF carrier fades and then returns in less than the COR Hold Time, then the mobile call continues normally.

If you make this time too long, then you will hear a squelch tail from the mobile when the signal is weak and the Model 42 misses the "turn off" packet. If you think the Model 42 is missing too many turn-off packets, check the adjustment of the SQUELCH and COR pots and settings of jumper JP7.

COR Mute Time
This carrier squelch Mute Time is the time from the Model 42 losing mobile carrier, until the Model 42 mutes audio.

This time is fixed at 0.1 sec (100 milliseconds). If mobile carrier fades and comes back within this time period (for example due to RF multipath), the Model 42 keeps the audio path active continuously, without introducing picket-fencing.

Packet Loss Time
This is the time from the Model 42 losing valid data packets from the mobile it was receiving, until the Model 42 drops the mobile call. RF fade, skip, or interference from other trunking system mobiles can cause loss of receive packets. (For example, other mobiles capture the LTR receiver) The packet loss time is set to a fixed 2 second value.

Repeater Hold Time
The Repeater Hold Time that appears in the Site Config database is useful, but not critical to system operation. The Repeater Hold Time keeps the repeater transmitter keyed after a dispatch mobile releases PTT. A value of 0 to 3 seconds can reduce thermal stresses on the RF power amp from keying up and down.

Repeater Timeout Timer
The Repeater Timeout that appears in the Site Config database is useful, but not critical to system operation. The Repeater Timeout causes a mobile to become invalid and mutes the audio if a dispatch mobile has stayed keyed continuously for too long.

ASSIGNING DISPATCH AND INTERCONNECT CHANNELS

Smart Free Channel Allocation

The Zetron Model 42, with compatible repeater bus circuitry and smart database, gives you flexibility in adding dispatch only to your existing E.F. Johnson or Uniden LTR trunking system. You can place the Model 42s in any channel in your system: adding new ones or replacing existing ones. Where you place the Zetron units can improve the trunking efficiency of your system, as we explain.

EFJ systems operate best when you place all of your interconnected channels together, consecutively numbered. This is because EFJ systems "trunk up"; that is, they send mobiles to the next "higher numbered" repeater when they are busy. Uniden systems give you a little more flexibility by allowing each interconnect to "point" to the next preferred channel for trunking, so you can trunk up, down, or spread out your interconnected channels.

Zetron's Intelligent Repeater Channel Allocation designates the next free repeater based upon whether the home channel is capable of handling outgoing interconnect (mobile to land line) calls or is dispatch only. Since each Model 42 knows these channels from the information you have programmed into Multibase, it can point to another channel of like capability when it is busy.

Mobiles homed on outgoing interconnect channels will trunk to an interconnected channel as long as one is available. Similarly, mobiles homed to dispatch channels will not trunk to an interconnect channel until all the dispatch-only channels are full. With dispatch mobiles homed on a Zetron Model 42, your interconnect users will make telephone calls more easily, improving your system's grade of service.

To activate this feature, you simply fill in the capabilities of all your trunking channels into the Multibase programming system in the Repeater Config database. The Model 42s and 49s then know where to trunk dispatch and interconnect home channel users.

All Zetron Channels

With Intelligent Repeater Channel Allocation, your Zetron units are smart and trunk efficiently, regardless of how you number them and regardless of which channels are dispatch-only or interconnected.

Johnson and Zetron Interconnect

Suppose you already have some interconnected channels from EFJ and are going to add in some new Zetron ones. You want to let your EFJ channels continue to "trunk up", so put your Zetron units just above your Johnson units. Mobiles homed on the Johnson interconnect channels will find more interconnects available and find it easier to get an interconnect. Mobiles homed on the new Zetron channels won't trunk up; they will go directly to a free dispatch or interconnect (Johnson or Zetron) as available.

Uniden and Zetron Interconnect

Suppose you already have some interconnected channels from Uniden and are going to add in some new Zetron ones. You want to let your Uniden channels continue to "trunk up or down", so put your Zetron units just above (if trunking up) or below (if trunking down) your Unidens. Mobiles homed on the

Uniden interconnect channels will find more interconnects available and find it easier to get an interconnect. Mobiles homed on the new Zetron channels won't trunk up or down; they will go directly to a free dispatch or interconnect (Uniden or Zetron) as available.

Make sure that you program the Repeater Config information in Multibase with all of your Johnson and Uniden channels so that the Zetron units know which channels are capable of outgoing interconnect.

REPEATER SHARING

The Model 42 can share the repeater with a Zetron conventional control terminal (Model 45B Z-Patch Interconnect or Model 48B Repeater Manager). You can thereby provide LTR and conventional operation, with some limitations, on the same repeater frequency at the same site.

First, your conventional mobiles must be equipped with "busy channel lockout". This provides the necessary privacy to which trunking customers are accustomed.

Second, conventional subaudible digital channel guard (DCG/DPL) has not been tested for compatibility and may false the Model 42, making it think an LTR mobile is attempting access. Also, some CTCSS tones may also false some LTR data codes.

For mobile to mobile, each terminal listens to the RX discriminator audio from the repeater's receiver. If an LTR mobile accesses the channel, the Model 42 decodes the LTR data packet and takes control of the channel by activating its CTL1 relay (closure to ground) and PTT relay (closure to ground). Conversely, if a conventional mobile accesses the channel with its CTCSS tone, the Model 45/48 decodes the tone and takes control of the channel by activating its PTT relay. When the channel is in use by one of the terminals, the other one ignores the discriminator input.

Figure 5-3 shows you how to wire a Zetron Model 42 to a Zetron Model 45 or 48. The RX discriminator audio, TX audio output, TX subaudible output, and PTT transmitter keying are connected in pairs to the repeater. The adjustments of the TX output levels on the two control units is interdependent since each output places an electrical load on the other.

It will be necessary to apply the PTTs of the Model 42 and Models 45 and 48 into an 'OR' gate. The output of the 'OR' gate should go to the PTT of the repeater.

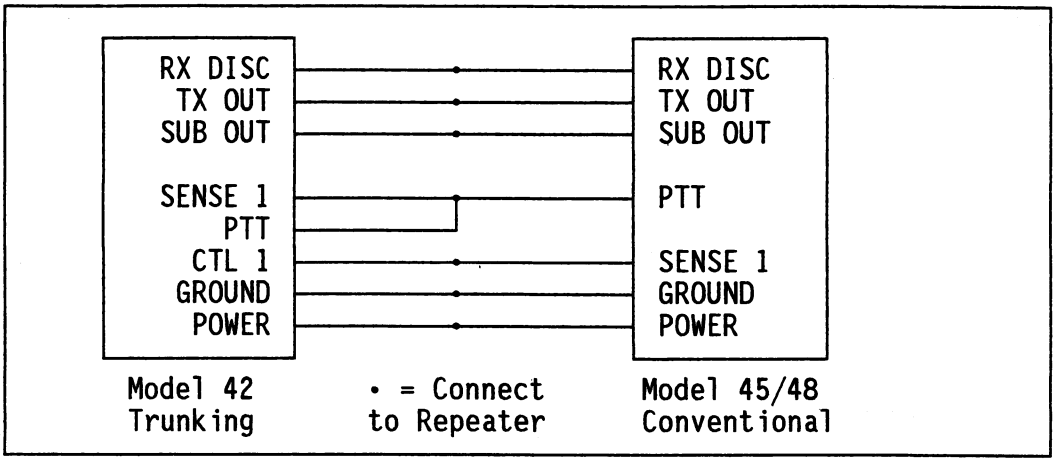

Figure 5-3. Model 42 to Model 45/48 Connection Diagram

To keep calls flowing smoothly, make sure to set the Repeater Hold Time on each control terminal to 2 to 5 seconds. Make this value long enough so that a pair of mobiles can have the channel for the duration of a "back and forth" dispatch call. You don't want the channel to drop and the other terminal to grab it between the PTTs of two mobile parties who are conversing.

If you have more than one repeater that you wish to share between Model 42s and conventional controllers, trunking becomes tricky. LTR mobiles that are homed on the Model 42s return there for trunking instructions. If the conventional controller has the channel tied up, the LTR mobiles are stuck and do not trunk. Therefore, to make trunking work, you need to home your LTR mobiles onto Model 42s that have free access to their repeaters (not shared). Other Model 42s can share repeaters and be used as "trunk to" channels; just don't home any mobiles there.

6. TROUBLESHOOTING

Troubleshooting flowchart 6-2
Power-On 6-2
Optional Heater 6-3
Sync present 6-4
Poll present 6-4
Squelch Operation 6-5
Test Mode Operation 6-6
Dispatch Operation Normal 6-8
Local Computer Access 6-13
External Modem Computer Access 6-14
Alarm Operation 6-18
Cross-Busy Operation 6-18

6. TROUBLESHOOTING

The following flowchart is included to assist experienced electronics service technicians in troubleshooting common problems that may be encountered during installation of the Model 42 into an LTR system. Each paragraph in the right-hand column of the flowchart deals with an observed fault symptom, possible causes for the symptom, and some recommended remedies.

Begin diagnosis at the "start" of the troubleshooting flowchart and follow the path to the fault experienced. Should you require assistance beyond this chart, please contact Zetron.

* *

For Customer Support, call Zetron Mobile Systems Division at

(206) 820-6363

Customer service technicians are available Monday - Friday
8:00 a.m. - 5:00 p.m. PST/PDT.

* *

General Flowchart Structure:

Start
↓
Set-Up
↓
Power-on (Power Supplies)
↓
Sync ?
↓
Poll ?
↓
Carrier LED / Squelch
↓
Idle Mode
↓
Test Mode Operation
↓
Dispatch Operation
↓
Computer Access (Local / External Modem)
↓
Alarm operation
↓
Cross-Busy Operation

* * * *

TROUBLESHOOTING FLOWCHART

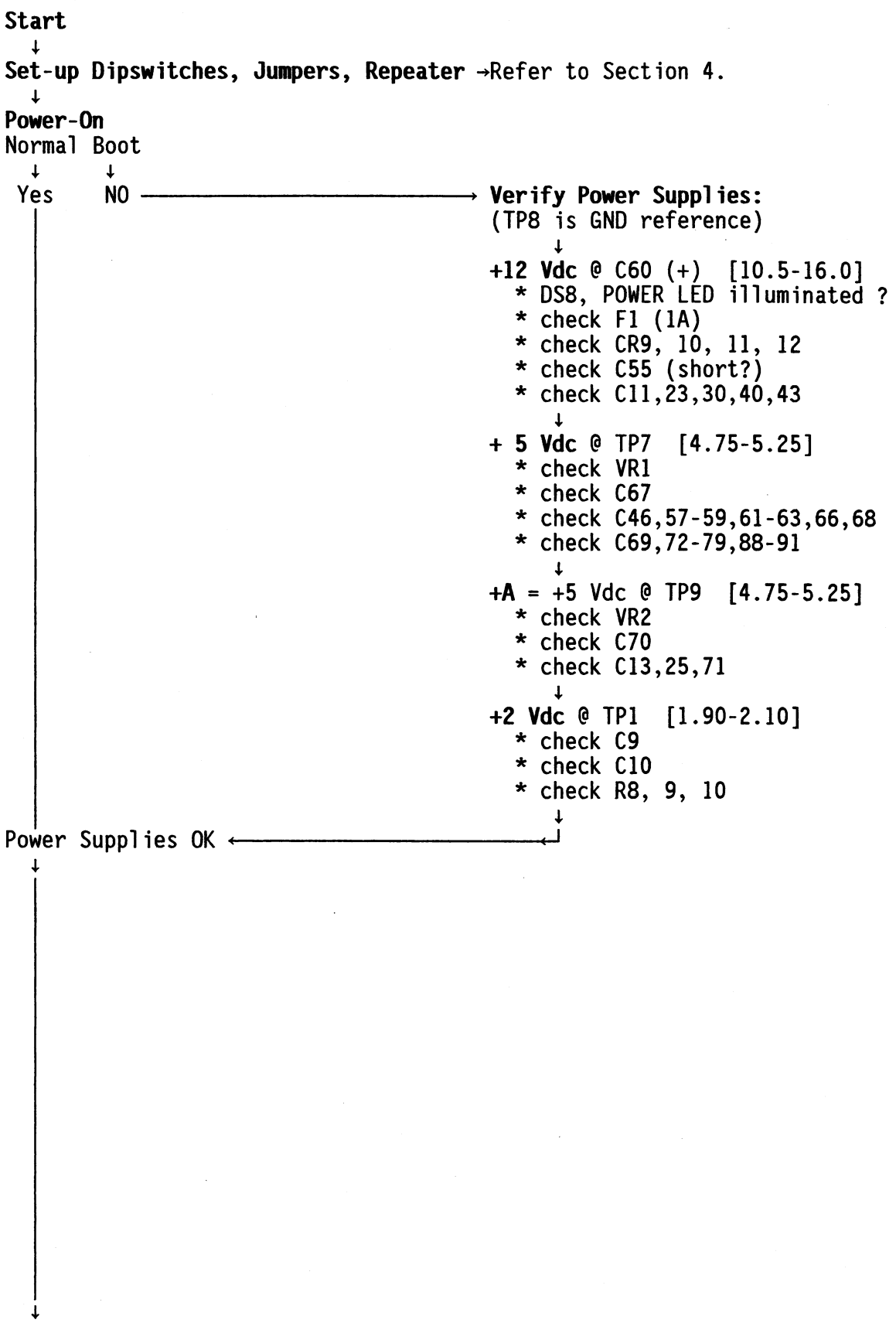

Optional Heater OK

↓ ↓

YES ↓ NO → **+0.7 Vdc** @ TP12 [0.6-0.8] referenced to GND (TP8)

↓

*Connect a DC V-meter so that TP12=(-), TP13=(+).

- At room temp=25°C (77°F) U22 pin 1 will go high Vmeas ≤ approx.-50 mVdc
- Test by monitoring while adjusting R100 "TEMP" pot.
- Factory Set to +50 mVdc to switch on @ -25°C (-13°F)

Heat-ON Temp (room temp)	Vmeas Set to: (TP12- /TP13+)
+30°C (+86°F)	-60 mVdc
+25°C (+77°F)	-50 mVdc
+20°C (+68°F)	-40 mVdc
+15°C (+59°F)	-30 mVdc
+10°C (+50°F)	-20 mVdc
+ 5°C (+41°F)	-10 mVdc
0°C (+32°F)	0 mVdc
- 5°C (+23°F)	+10 mVdc
-10°C (+14°F)	+20 mVdc
-15°C (+ 5°F)	+30 mVdc
-20°C (- 4°F)	+40 mVdc
-25°C (-13°F)	**+50 mVdc**
-30°C (-22°F)	+60 mVdc

↓

* When U22 pin 1 goes high, then Q3 is switched on, and the drain (center lead) goes from +12 Vdc to ≈0 Vdc.

↓

* When Q3 is on, current flows through R7 and R112, which equates to ≈800 mAdc total.

↓

* R7, R112 dissapate ≈ 4.8 W of power into heat each when Q3 is on.

↓

Sync present
Observe LED on M42 face.

Yes → (continue)

NO → Verify only ONE Repeater Bus "Master" at the LTR Site.
SW2-2: up = master
down = slave

↓

* Verify SYNC BUS termination (only *ONE* place terminated)
JP13 = A if EFJ Terminated
= B if Uniden Terminated
= C if NOT Terminated

For ease of mind, terminate only the "master" controller unit.

↓

* Hardware failure - trace path: U21 µProcessor data→ U35 DUART→ "TRB"signal→U33C (p5→ p6) →U28p14,15 (EFJ) or U32p4 (Uniden)
* Soft Reset M42. Hold CONNECT / DISCONNECT button until LEDs flash.

Poll present
Observe LED on M42 face.

Yes → (continue)

NO → Verify only ONE Subscriber Bus "Master" at the LTR Site.
SW2-1: up = master
down = slave

↓

* Verify POLL BUS termination (only *ONE* place terminated)
JP12 = A if EFJ Terminated
= B if Uniden Terminated
= C if NOT Terminated

For ease of mind, terminate only the "master" controller unit.

↓

* Hardware failure - trace path: U21 µProcessor data→ U35 DUART→ "TSB"signal→U33B (p3→p4) →U28p5,6 (EFJ) or U32p5 (Uniden)
* Soft Reset M42. Hold CONNECT / DISCONNECT button until LEDs flash.

↓

Squelch Operation
Carrier LED off when repeater idle

Yes / No → Carrier LED lights steadily.
Re-adjust M42 SQUELCH
Refer to Section 4

- JP7 Set OK:

INT SQ: 1-2,3-4
EXT SQ-:5-6,7-8
EXT SQ+:5-7,6-8

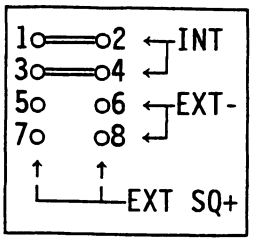

- TP6 low if DISC IN is quiet
- DISC IN ≈ 2 Vpp noise if *Idle*

* Carrier LED flashes or lights erratically.
- Recheck DISC IN signal with frequency selective voltmeter or audio spectrum analyzer to verify noise signal contains 2 Vp-p above 4 KHz.
- If inadequate high frequency noise energy is present, then reconfigure JP7 as required to utilize the EXTernal COR into the M42 from the repeater circuitry, if provided by the repeater.
- OR: locate the filtered buffer amplifier in the repeater between the discriminator and M42 input, and disable the filtering to allow wide-band noise to pass to the M42.

Idle Packets transmitting
normally @ correct intervals

Yes / No → Verify Multibase Programming

* "Idle Msg Time"
in Edit/Site Config.
sets interval between messages

* "Turn Off Idle Msg"
in Edit/Repeater Config.
Should be set to "N" for most LTR site applications.

Test Mode Operation
This mode provides a means of determining Repeater and/or M42 hardware faults.

↓

Operating Mode

↓

→ Test Mode Tests

↓

* Note SW1-2 position for later restoration if changed.

↓

* Invoke Test Mode as follows:
  - SW1-1: UP Enables Test Mode
  - SW1-2: DOWN Tx TEST ID code
    UP Tx ID=253 (BUSY)
    Note-TEST ID is determined in the Multibase EDIT / REPEATER CONFIG window.
  - Soft Reset M42 by pressing and holding CONNECT/DISCONNECT switch on front until LEDs flash (approximately 2 sec).

↓

1. Transmit Test
   * Invoke Test Mode, M42 should begin transmitting ringing with selected LTR ID code.
   * Verify status of Tx signal with RF Service Monitor set to Tx carrier frequency.
   * 800 MHz FCC specs require:
     - Data Deviation = 800-1200 Hz (950 Hz most reliable)
     - Audio Dev.(max) = 3.5 KHz
     - Total Max Dev = 4.7 KHz
     - Refer to Section 4 for more details of adjust procedure.
   * If either of these signals are missing, trace cable wiring from diagram for specific repeater in Sect. 4.
   * Verify correct LTR ID code using service monitor, or LTR decoder attached to "demod" output from service monitor, or program mobile w/ TEST ID. Does Mobile ring ?
   * If Tx Data inverted, try changing JP10.
   * If Tx Data waveform is ramped or distorted, mobile won't decode correctly, if at all.
     - Verify correct status of R55 (IN/OUT) for repeater used.
       IN = DC Coupled Tx Data
       (will shift ICOM TxFc)
       OUT = AC Coupled Tx Data

(Operating Mode)

(Test Mode Continued)

↓

2. Receiver Tests
   * Resume Operating Mode
     - Set SW1-1 Down.
     - Restore SW1-2 to original setting.
     - Soft Reset M42.
   * M42 should be transmitting idle packets at programmed intervals (Multibase Edit/ Site Config./Idle Msg Time).
   * Connect RF Service Monitor direct to Rx Antenna port of repeater.
     - For combined Tx/Rx ports, temporarily disconnect PTT drive from M42 J1-(5 or 7).
   * With NO carrier applied, set M42 INT Squelch as follows:
     - Set COR pot to 6 O'clock (↓)
     - Rotate SQUELCH fully CW; CARRIER LED should be lit.
     - Adjust SQUELCH CCW until CARRIER LED just goes off steady.
   * Inject 1 mVrms RF Carrier modulated to 4.0 KHz Dev. by 1.0 KHz Sinewave Tone.
   * Verify 1 Vpp @ TP3 (M42) using oscilloscope. Adjust RX AUD as needed.
   * Add 1.0 KHz Dev. LTR Data if Service Monitor can generate, OR modulate to 1.0 KHz Dev. with 100 Hz Sinewave.
   * Verify ≈300 mVpp "data" level at TP3 (with or without 1KHz)
     - Using LTR encoder:
       Tx Data LED (DS2): ON only if valid user ID.
       Rx Data LED (DS3): ON
       QUAL LED (DS1): ON
   * If using LTR encoder, Rx Data LED is OK and QUAL LED is NOT lit, Rx Data may be inverted; try changing JP11.
   * If using 100 Hz tone instead of LTR Data generation, only 300 mVpp *data level* can be readily verified.
   * Using a pre-programmed radio, key-up and check LED status. Be sure the radio ID is valid in the Multibase/M42 database.

Dispatch Operation Normal

↓ Yes

↓ No → Carrier LED lit when dispatch mobile keyed.

↓ Yes

↓ No

* Verify Mobile Radio programming
* Verify M42 Repeater number and frequency
* Set repeater RX levels (Sect.4)

↓

1. DS3 Illuminates (Rx Data LED)

↓ Yes

↓ No

* Re-set M42 Rx Levels (Refer to Section 4)
* Verify Squelch adj.
* Verify JP11 setting

↓

2. DS1 Illuminates (Qual LED)

↓ Yes

↓ No

* Data Packet Error. Verify LTR protocol from radio using Service Monitor.
* Verify mobile ID programmed VALID in M42 Multibase Data
* Upload Multibase Database to M42.

↓

3. DS2 Illuminates (Tx Data LED)

↓ Yes

↓ No

* Multibase, Firmware, or LTR ASIC (U13) error. Verify proper versions and Edit User Config.
* Verify JP10 setting.

↓

(Normal Dispatch Operation)

↓

(Dispatch problems continued)

↓

4.Mobile aquires M42 OK, but no audio allowed by M42.

* User Id Invalid ! Verify Multibase and update M42 memory.
* Verify ID in mobile

↓

Note: If a mobile is trunked off from the home repeater, the home repeater remains keyed until the trunked-unit drops. ("GO TO" packets are transmitted to the mobile from the home repeater.)

↓

5.*Slow* Repeater Access from one or more mobiles - OR - too many retries for system access.

* Carefully examine mobile Tx Data signal for key-up transients (may degrade decoder performance)
* Examine mobile Tx carrier frequency stability.
* R55 installed; may cause Tx carrier shift when key-up occurs if ICOM used in Repeater Exciter circuit
* Verify correct M42 Firmware and LTR ASIC versions.
* Reset Tx Data Baud rate to 300 Baud at mobile if adjustable.
* RF or IF interference ?
  - Intermodulation ?
  - Co-Channel ?
  - Strong local RF fields interfering with M42 ?

  Check GROUNDING system ! !
* Multibase User Validation programmed incorrectly. Refer to Multibase Manual
  - 025-9173 if V1+ or V2+ (may be used with M49 V4+)
  - 025-9297 if V2+ (may be used with M49 V6+)

↓

↓

(Normal Dispatch Operation)

↓

(Dispatch problems continued)

↓

6.Access problems: Occasional or consistent difficulty.
  * Wrong Repeater # set in M42 Refer to Section 4.
  * Rx or Tx Data Level too high or too low; Refer to Section 4
  * Receiver misses data packets from mobile ... Multibase Edit / Site Config. / Repeater Hold Time - set too long.
  * Mobile not receiving complete data packets ... Multibase Edit / Repeater Config. / Keyup Delay - set too short.
  * Weak RF signal: check Rx antenna and/or receiver alignment.
  * Generally erratic operation of Model 42, possibly has low DC input level; Verify 10.5 Vdc - 16.0 Vdc.
  * M42 Internal Squelch adj. Refer to Section 4, and to Test Mode Operation section of this TS flowchart.
  * Multibase User Validation programmed incorrectly. Refer to Multibase Manual
    - 025-9173 if V1+ or V2+
    - 025-9297 if V2+ used with M49 V6+ systems.

    NOTE: M49 V6+ systems require V2+ M42 Firmware.

↓

7.Good Access on home repeater; No trunking through system.
  * Repeater Bus not wired between repeaters.
  * Repeater Bus cabling crossed with Subscriber Bus
  * Bus termination errors. Improper Terminations ? Verify SYNC (RPTR Bus) LED and POLL (SUBSC Bus) LED lit normally, then check:
    -NO LESS than 100Ω total on EACH M42 Bus (SUBSC/RPTR).
    -JP12 is SUBSC Termination.
    -JP13 is RPTR Termination.
    Refer to Section 4.

(Normal Dispatch Operation)

(Dispatch problems continued)

↓

* Multiple Sync Masters on *Repeater* OR *Subscriber* Bus.
* M42 Repeater Number Wrong. Refer to Section 4.
* RFI on the Data Buses. 100 MHz BW Oscilloscope or higher required to observe RFI effectively.
  - FIRST - *Verify grounding of all equipment does not rely upon equipment rack chassis, but rather is bonded via copper wiring similar to description illustrated in Zetron's technical bulletin (027-0069). This will also help with lightning protection.* Contact Zetron Mobile Systems Customer Support for a free copy of this document if desired.
  - Try using 220 Ω BNC termination at each end of each bus (Rptr & Subs) instead of JP12, JP13 in M42 master or JP21, JP22 in M49 master unit.
  - Add 0.001μF capacitors to each termination to shunt RF energy to ground.
* Firmware Versions NOT same in all M49s at one site. Contact Zetron for upgrades

↓

8. Audio Pickett Fencing.
   * COR HOLD TIME too short in multibase parameters; Set > 0.3 sec in Site Conf.
   * Weak RF; need better antenna for coverage area.

↓

9. Squelch Tails frequently.
   * COR HOLD TIME too long in multibase parameters; Set shorter time duration.

↓

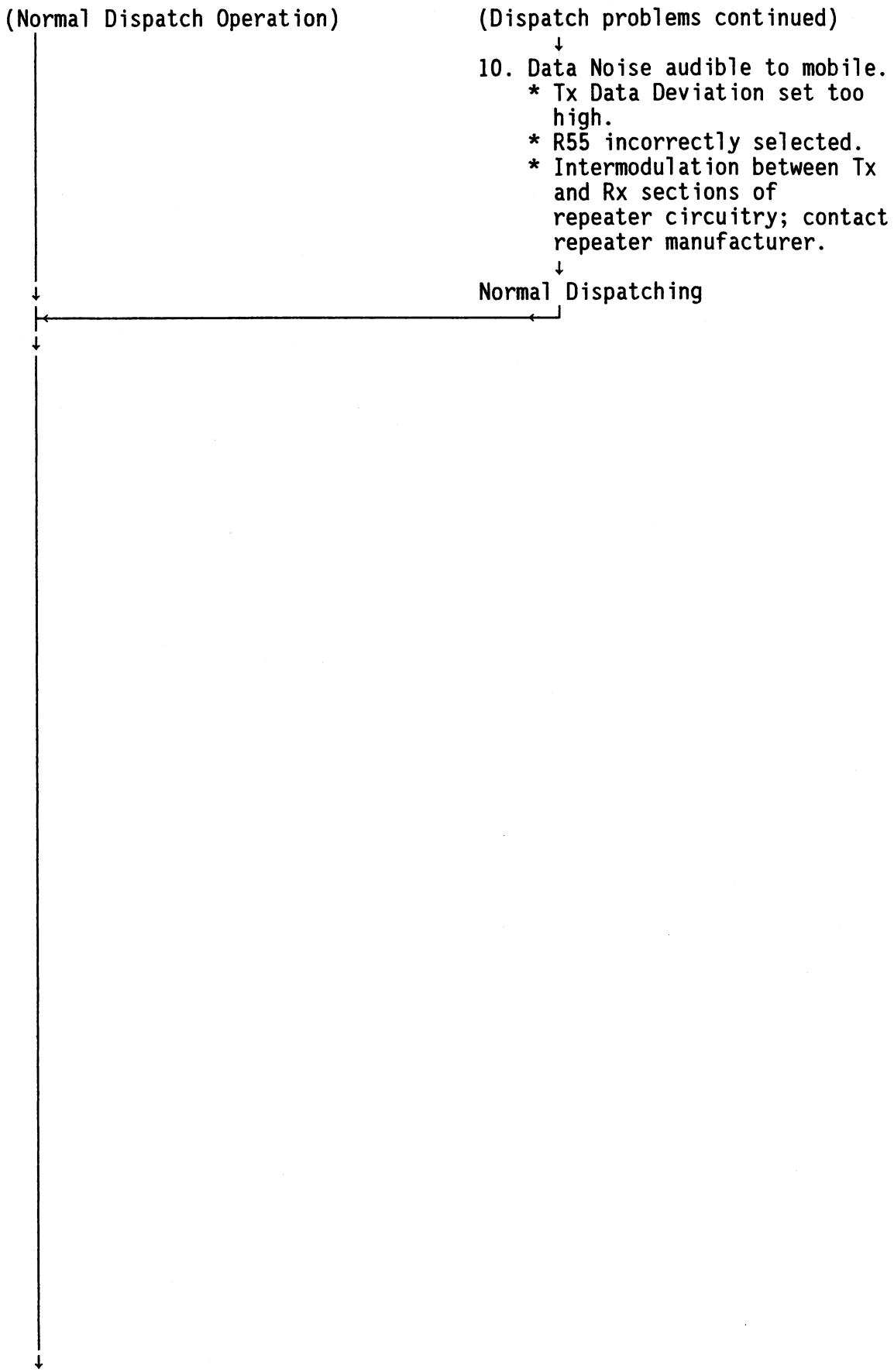
(Normal Dispatch Operation)
(Dispatch problems continued)
10. Data Noise audible to mobile.
* Tx Data Deviation set too high.
* R55 incorrectly selected.
* Intermodulation between Tx and Rx sections of repeater circuitry; contact repeater manufacturer.
Normal Dispatching

Local Computer Access Normal

Yes / No → Local Access Problems

* Verify Computer Comm Port in Multibase Site Config.
* Computer Hardware IRQ jumper settings; typically COM1=IRQ04; COM2=IRQ03 this may vary per computer.
* Verify Baud Rate in M42 hardware matches Multibase Site Config.

M42 SW1-3	M42 SW1-4	Multibase Baud Rate
Down	Down	300
Down	Up	1200
Up	Down	2400
Up (default)	**UP**	**4800**

Soft Reset M42 following switch changes. Hold CONNECT / DISCONNECT button until LEDs flash.

* Wrong ACCESS status in Multibase Site Config.
* Verify programming cable per figure 2.2 or 2.3 in the appropriate multibase manual, using an Ω-meter.
* "Access Denied" message... Password Corrupted; hard reset M42 at site and reprogram or re-clone.
* No Sync Master or multiple masters on RPTR or SUBSC bus; Refer to Section 4, Installation Step 1.
* Low DC Input Power; Verify 10.5 Vdc - 16.0 Vdc.
* Verify U36 (RS-232 I/O) operating:
  - Pin 2 = -(9→10) Vdc
  - Pin 6 = +(9→10) Vdc
* M42 not Repeater 1 → 20; reset SW2-4 through SW2-8; Refer to Section 4; Be sure to soft reset M42.
* Incompatible Multibase; install correct version...

↓

← Local Access OK

↓

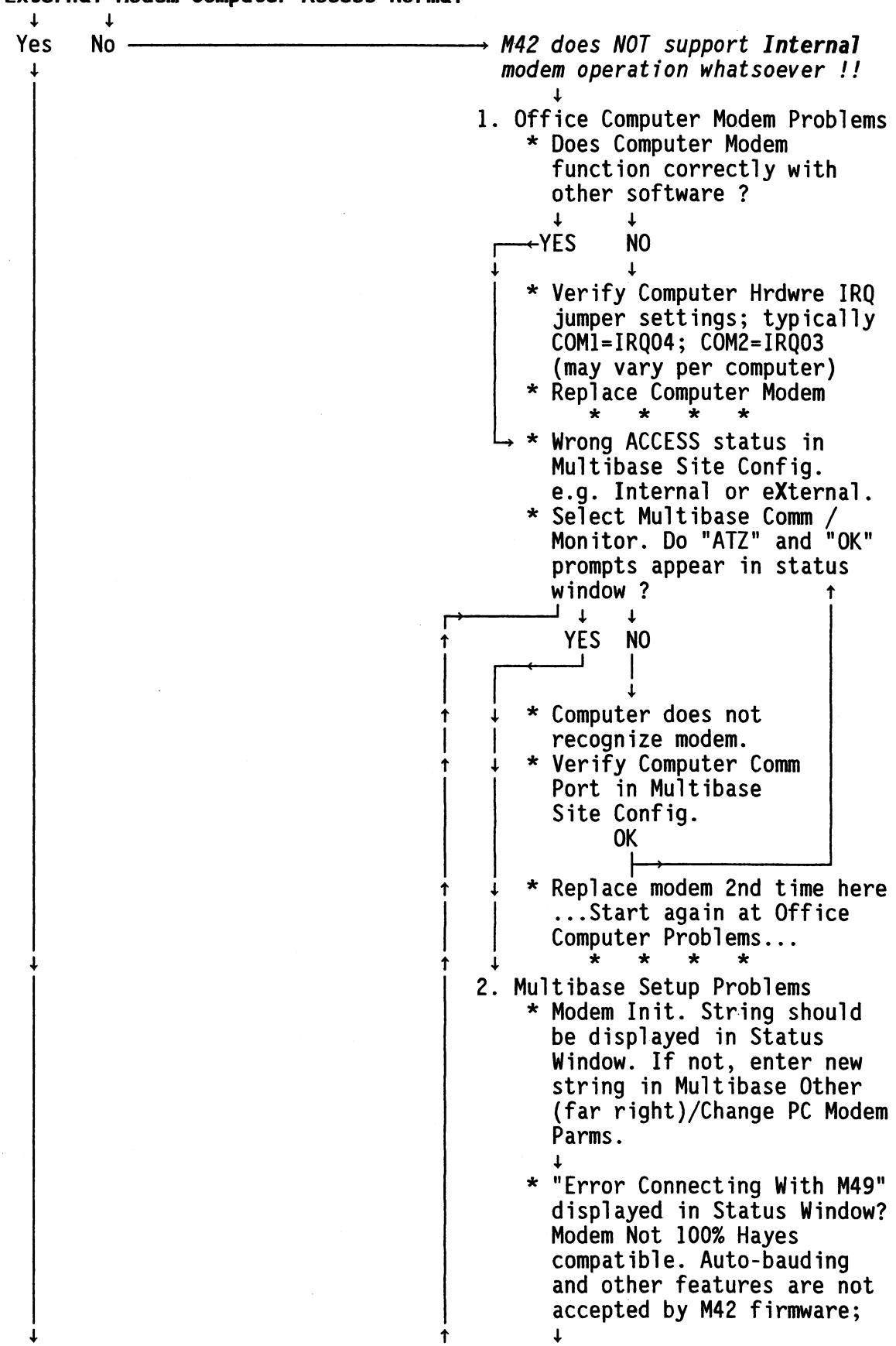
External Modem Computer Access Normal
Yes
No
M42 does NOT support Internal modem operation whatsoever !!
1. Office Computer Modem Problems
* Does Computer Modem function correctly with other software ?
YES
NO
* Verify Computer Hrdwre IRQ jumper settings; typically COM1=IRQ04; COM2=IRQ03 (may vary per computer)
* Replace Computer Modem
* * * *
* Wrong ACCESS status in Multibase Site Config. e.g. Internal or eXternal.
* Select Multibase Comm / Monitor. Do "ATZ" and "OK" prompts appear in status window ?
YES
NO
* Computer does not recognize modem.
* Verify Computer Comm Port in Multibase Site Config.
OK
* Replace modem 2nd time here ...Start again at Office Computer Problems...
* * * *
2. Multibase Setup Problems
* Modem Init. String should be displayed in Status Window. If not, enter new string in Multibase Other (far right)/Change PC Modem Parms.
* "Error Connecting With M49" displayed in Status Window? Modem Not 100% Hayes compatible. Auto-bauding and other features are not accepted by M42 firmware;

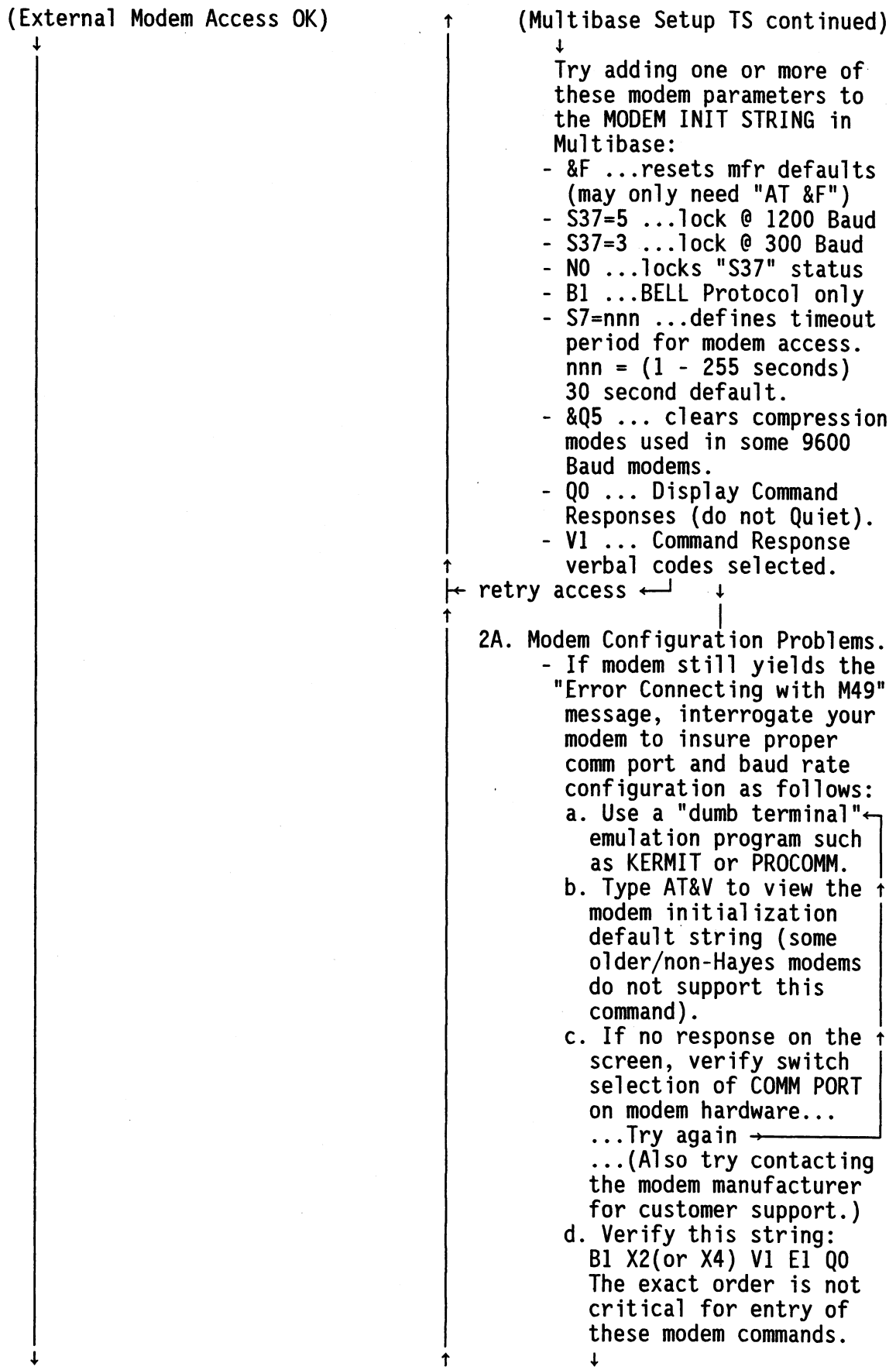
(External Modem Access OK)
(Multibase Setup TS continued)
Try adding one or more of these modem parameters to the MODEM INIT STRING in Multibase:
- &F ...resets mfr defaults (may only need "AT &F")
- S37=5 ...lock @ 1200 Baud
- S37=3 ...lock @ 300 Baud
- N0 ...locks "S37" status
- B1 ...BELL Protocol only
- S7=nnn ...defines timeout period for modem access. nnn = (1 - 255 seconds) 30 second default.
- &Q5 ... clears compression modes used in some 9600 Baud modems.
- Q0 ... Display Command Responses (do not Quiet).
- V1 ... Command Response verbal codes selected.
retry access
2A. Modem Configuration Problems.
- If modem still yields the "Error Connecting with M49" message, interrogate your modem to insure proper comm port and baud rate configuration as follows:
a. Use a "dumb terminal" emulation program such as KERMIT or PROCOMM.
b. Type AT&V to view the modem initialization default string (some older/non-Hayes modems do not support this command).
c. If no response on the screen, verify switch selection of COMM PORT on modem hardware...
...Try again
...(Also try contacting the modem manufacturer for customer support.)
d. Verify this string:
B1 X2(or X4) V1 E1 Q0
The exact order is not critical for entry of these modem commands.

(External Modem Access OK)

↓

(Modem Config. TS continued)

↑

↓

e. Note any differences for entry into Multibase MODEM INIT STRING.

f. Test for dial tone access by modem:

- ▸type ATH1...Off-Hook the computer modem »»» Dial Tone on «««
- ▸type ATH0...On-Hook the computer modem »»» Dial Tone off «««
- ▸If modem will not seize Dial Tone, contact the modem sales/service office for your modem.

↳ retry access ←┘

↓

NO "Error Connecting with M49"

↓

2B. Multibase Setup Problems

↓

* "Connect <baud>" displaying wrong baud rate (none=300)
* Verify Baud Rate in M42 hardware matches Multibase Site Config. selection.

M42 SW1-3	M42 SW1-4	Multibase Baud Rate
Down	Down	300
Down	Up	1200
Up	Down	2400
Up	**UP**	**4800**
(default)		

Soft Reset M42 following switch changes. Hold CONNECT / DISCONNECT button until LEDs flash.

↓

↓

(External Modem Access OK)

(Modem Access TS continued)

3. M42 Site Problems

* "Access Denied" message... Password Corrupted; hard reset M42 at site and reprogram or re-clone.

* TO TEL, FROM TEL, or hybrid balance problem in External Modem attached to M42
  - OR -
  in problem in TELCO CO equipment - contact them...

* "Error on Zetron Bus"
  No SUBSC Bus POLL syncing (Poll LED off) due to:
  - Cloning in progress;
  - NO Poll Master;
  - multiple Poll Masters;
  - too many SUBSC Bus terminations;
  - NO SUBSC Bus termination;
  - EFJ and Uniden SUBSC Bus configurations both simultaneously exist on SUBSC Bus.

* Verify external modem cable wiring to the M42 RS-232 using figure 2-6 in the Multibase manual, and an Ω-meter.

* Verify U36 (RS-232 I/O) operating:
  - Pin 2 = -(9→10) Vdc
  - Pin 6 = +(9→10) Vdc

Call Zetron Mobile Systems Customer Service at (206) 820-6363 if still experiencing difficulty.

Modem Computer Access OK now.

Alarm Operation OK

↓ ↓

Yes — No → Are ALARMS enabled (Y) in Site Config. of Multibase ?

↓

The Model 42 does not support any Alarm Functions whatsoever. Leave the alarm settings of Multibase Edit / Repeater Config. / Alarms Enabled = **N** for this particular repeater. Use a M49 to provide desired alarms, if one coexists in the system.

↓

Cross-Busy Operation OK

↓ ↓

Yes — No → Cross-Busy input wired to M42 ?

- * Sense 1 Input @ J1-9, Referenced to GND.
- * Input range = 0 - 5 Vdc
- * Active Input = 0 - 0.5 Vdc

↓

* Cross-Busy Output wired to controller of system sharing repeater ?
  - * CTRL 1 Output @ J1-8, Referenced to GND.
  - * JP3=A; N.O. Relay closure
  - * JP3=B; N.C. Relay Closure
  - * Contact Closure Ratings:
    - 1.0 A @ 24 Vdc RES
    - 0.5 A @ 120 Vac RES

↓

* Cross-Busy Delay set correctly in Multibase Edit/Site Config.
  - * [0-7] x 100 msec = Delay. Default = 0.

↓

* If using the Zetron Cross-Busy Board 702-9496 (Conventional / LTR Overlay) refer to that installation manual or call Zetron Mobile Systems customer support at (206) 820-6363

↓

System Operation should be Normal

7. PARTS LISTS AND SERVICE DIAGRAMS

Model 42 top assembly (024-0165A) 7-1

Model 42 control board parts list (702-9471F) 7-2

Model 42 control board schematic (008-9471F) 7-6

Model 42 control board silkscreen (702-9471F) 7-11

Model 42 SEA top assembly (024-0166A) 7-12

Model 42 SEA control board parts list (702-9518D) 7-13

Model 42 SEA control board schematic (008-9518D) 7-17

REVISIONS				
REV	DESCRIPTION	DRAWN	APPRVD	DATE
A	RELEASE (ECN 2866)			VP

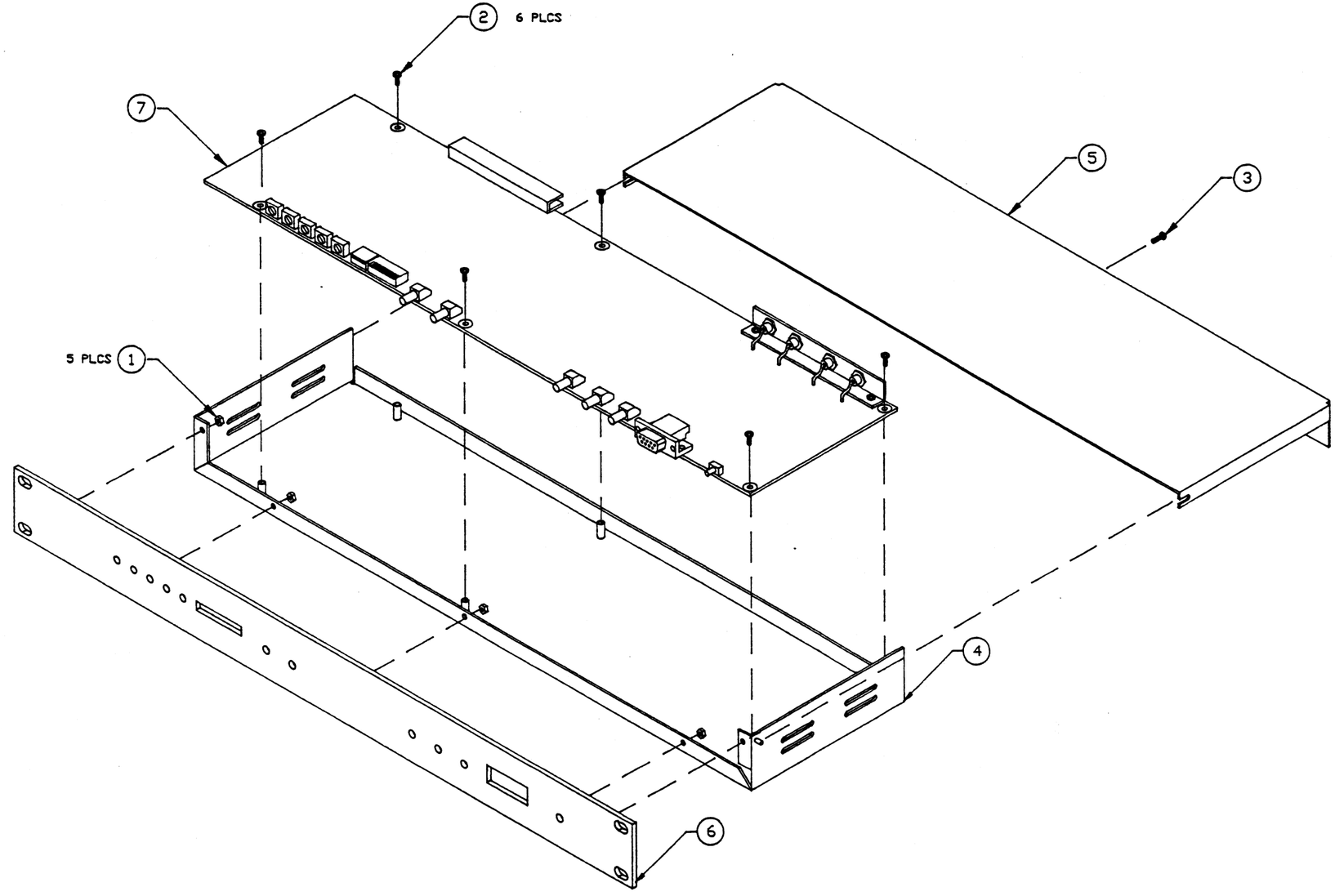

NOTES: REFERENCE 901-9309

ITEM	QTY.	PART #	DESCRIPTION
7	1	702-9471	M42 CONTROL BOARD ASSY
6	1	415-9729-1	M42 FRONT PANEL
5	1	415-9728-1	M42 TOP COVER
4	1	415-9176	M38 BOTTOM COVER
3	1	220-0108	440X1/4 PAN PH.
2	6	220-0102	440X3/8 PAN PH.
1	5	210-0001	440 KEPT NUT

DRN VP 02-09-95
CHK
APV

ZETRON

ZETRON INC., 12338 134TH COURT NE, REDMOND, WA 98052

TOLERANCES UNLESS OTHERWISE NOTED
DECIMAL ±.XX ±.01
±.XXX ±.005
ANGULAR ± 1°
SCALE: 5 = 1
SHEET: 1 OF 1

TITLE: MODEL 42 TOP ASSY

DRAWING NUMBER: 024-0165 REV: A SIZE: D

DO NOT SCALE DRAWING

MODEL 42 CONTROL BOARD PARTS LIST (702-9471F)

LEGEND:

= NOT INSTALLED
^ = INSTALLED ON HIGHER ASSY
+ = OPTION (INSTALLED PER CUSTOMER ORDER)

ITEM	QTY	COMPONENT REFERENCE	PART NO.	DESCRIPTION	MANUFACTURE P/N
1	1	R55	101-0010	1 OHM 1/4W 5% CARBON FILM	
2	3	R68,R81,R82	101-0047	47 OHM 1/4W 5% CARBON FILM	
3	5	R25,R26,R61,R103,R105	101-0049	100 OHM 1/4W 5% CARBON FILM	
4	3	R86,R87,R88	101-0061	330 OHM 1/4W 5% CARBON FILM	
5	1	R10	101-0065	470 OHM 1/4W 5% CARBON FILM	
6	1	R67	101-0066	510 OHM 1/4W 5% CARBON FILM	
7	15	R27,R31,R38#,R47,R56,R89, R90,R91,R94#,R95,R99, R102,R104,R107,R108,R109, R110	101-0073	1K 1/4W 5% CARBON FILM	
8	5	R13,R15#,R16,R20#,R43, R45,R52	101-0075	1.5K 1/4W 5% CARBON FILM	
9	1	R83	101-0081	2.2K 1/4W 5% CARBON FILM	
10	4	R4,R19,R50,R57,R98#	101-0085	3.3K 1/4W 5% CARBON FILM	
11	3	R17,R21,R62,R96#	101-0089	4.7K 1/4W 5% CARBON FILM	
12	1	R29	101-0090	5.1K 1/4W 5% CARBON FILM	
13	0	R3#	101-0092	6.2K 1/4W 5% CARBON FILM	
14	1	R18	101-0095	8.2K 1/4W 5% CARBON FILM	
15	3	R58,R63,R70,R84#	101-0097	10K 1/4W 5% CARBON FILM	
16	1	R60	101-0101	15K 1/4W 5% CARBON FILM	
17	1	R5	101-0103	18K 1/4W 5% CARBON FILM	
18	4	R9,R24,R36,R37	101-0105	22K 1/4W 5% CARBON FILM	
19	4	R11,R12,R28,R39,R97#	101-0107	27K 1/4W 5% CARBON FILM	
20	4	R8,R44,R46,R65	101-0109	33K 1/4W 5% CARBON FILM	
21	1	R6	101-0111	39K 1/4W 5% CARBON FILM	
22	8	R30,R35,R48,R53,R71,R72, R77,R78	101-0113	47K 1/4W 5% CARBON FILM	
23	4	R1,R2,R40,R41	101-0114	51K 1/4W 5% CARBON FILM	
24	2	R75,R66	101-0115	56K 1/4W 5% CARBON FILM	
25	1	R14	101-0118	75K 1/4W 5% CARBON FILM	
26	4	R34#,R42,R51,R59,R79	101-0121	100K 1/4W 5% CARBON FILM	
27	1	R74	101-0125	150K 1/4W 5% CARBON FILM	
28	1	R23	101-0129	220K 1/4W 5% CARBON FILM	
29	1	R76	101-0139	560K 1/4W 5% CARBON FILM	
30	5	R22,R49,R64,R85,R93#, R111	101-0145	1M 1/4W 5% CARBON FILM	
31	2	R73,R92	101-0160	10M 1/4W 5% CARBON FILM	
32	0	R112#,R7#	103-0030	30 OHM 5W 5% WIREWOUND	
33	2	R69,R33	107-0003	2K POT 1 TURN R/A	
34	3	R32,R54,R80	107-0015	50K POT 1 TURN R/A	

MODEL 42 CONTROL BOARD PARTS LIST (702-9471F) Continued

ITEM	QTY	COMPONENT REFERENCE	PART NO.	DESCRIPTION	MANUFACTURE P/N
35	0	R100#	107-0202	2K POT 1 TURN	
36	2	RP2,RP1	119-0006	10K x 9 BUSSED 10-PIN SIP	
37	2	RP4,RP5	119-0008	10K x 7 BUSSED 8-PIN SIP	
38	1	RP3	119-0021	R/2R 100K/200K 10 PIN SIP	
39	4	C52,C53,C92,C93	151-0001	10PF 100V/200V + 10%/5% CERAMIC NPO	
40	2	C38,C21	151-0010	100PF 100V/200V +-10%/5% CERAMIC NPO	
41	17	C20,C32,C33,C35,C47#,C48, C49,C51,C54,C56,C80,C81, C82,C83,C84,C85,C86,C87	151-0020	.001UF 100V +-10% CERAMIC, X7R	
42	2	C65,C64	151-0022	22PF 100V/200V +-10%/5% CERAMIC NPO	
43	1	C42	151-0047	470PF 100V/200V +-10%/5% CERAMIC NPO	
44	3	C44,C45,C96	151-0120	.01UF 50V/100V +-10% CERAMIC X7R	
45	32	C10,C11,C13,C23,C25,C30, C40,C43,C46,C55,C57,C58, C59,C61,C62,C63,C66,C68, C69,C71,C72,C73,C74,C75, C76,C77,C78,C79,C88,C89, C90,C91	151-0180	.1UF 50V +-20% CERAMIC Z5U	
46	1	C8	151-0199	.47UF 50V +-5%, POLYESTER	
47	1	C22	152-0015	.015 UF 50V +-5% POLYESTER	
48	1	C34	152-0047	47UF 25V 20% NON-POLAR ELECTROLYTIC	
49	2	C41,C24	152-0050	10 UF 100V 20% NON-POLAR ELECTROLYTIC, RADIAL	
50	3	C4,C15,C36	152-0080	.22 UF 50V +-5%	
51	2	C6,C7	152-0085	.01 UF 50V +- 5% POLYESTER	
52	3	C2,C19,C37	152-0088	.0047UF 50V +-5% POLYESTER	
53	2	C27,C28	152-0089	.001 UF 50V +-5% POLYESTER	
54	2	C18,C3	152-0122	.022 UF 50V 5% POLYESTER	
55	2	C17,C12	152-0130	.033 UF 50V 5% POLYESTER	
56	1	C29	152-0152	.0015 UF 50V 5% POLYESTER	
57	4	C1,C5,C14,C26	152-0250	.047 UF 50V 5% POLYESTER	
58	3	C31,C39,C50	154-0025	1 UF 35V TANTALUM +- 10%	
59	4	C94,C95,C97,C98	154-0100	10 UF 16V TANTALUM +-10%	
60	2	C67,C9	155-0052	10 UF 35V +-20% RADIAL ALUMINUM ELECTROLYTIC	
61	1	C16	155-0053	22UF 35V RADIAL ALUMINUM ELECTROLYTIC	
62	1	C70	155-0083	470 UF 10 VOLT RADIAL ALUMINUM ELECTROLYTIC	
63	1	C60	155-0140	3300 UF 25V +50%-10% AXIAL ALUMINUM ELECTROLYTIC	
64	14	E1,E2,E3,E4,E5,E6,E7,E8, E9#,E10,E11,E12,E13,E14, E15	305-0001	FERRITE BEADS W/ LEADS	
65	7	DS1,DS2,DS3,DS4,DS5,DS6, DS7	311-0011	LED RED FLUSH	
66	1	DS8	311-0012	LED GREEN FLUSH	
67	1	U36	316-0232	RS232 DRIVER CMOS +5V POWER	232
68	9	U1,U2,U4,U5,U6,U7,U8,U9, U10,U22#	316-0358	OP-AMP, DUAL BIPOLAR	358
69	2	VR2,VR1	316-7805	REGULATOR, +5V 1.5A	7805

MODEL 42 CONTROL BOARD PARTS LIST (702-9471F) Continued

ITEM	QTY	COMPONENT REFERENCE	PART NO.	DESCRIPTION	MANUFACTURE P/N
70	1	U28	317-5121	DUAL LINE RECEIVER	SN75121
71	1	U30	317-5122	TRIPLE LINE RECEIVER	SN75122
72	1	U32	317-5138	QUAD BUS XCVR	SN75138
73	2	U13,U17(NOTE 1)	321-0751	CMOS MICRO, 0 TO 70C, 3.5 TO 12MHZ	ASIC 001
74	1	U35	321-2181	DUAL UART, 2681	2681
75	1	U21	321-6811	UP-HC MOS	68HC11A0
76	2	U27,U24	321-8256	SRAM, 32K X 8, 100NS, 50UA FROM 0-70C	32KX8
77	1	U31,U29# (NOTE 1)	322-7256	32Kx8 CMOS EPROM, 250NS	27C256 EPROM
78	1	U3	323-4053	3PDT SWITCH	4053
79	2	U23,U19	324-4138	DECODER 1 OF 8	74HC138
80	1	U34	324-4373	OCTAL LATCH	74HC373
81	4	U14,U15,U16,U18	324-4374	OCTAL DFF REG	74HC374
82	1	U25	324-7400	QUAD NAND	74HC00
83	3	U11,U12,U33	324-7414	HEX SCHMIDT	74HC14
84	1	U20	325-7432	QUAD OR GATE	74HCT32
85	1	U26	340-2003	RELAY DRIVER 50V/.5A	2003
86	0	Q3#	340-3055	12A 60V N FET	3055
87	1	Q1	340-3904	NPN 40V/200MA	2N3904
88	1	Q2	340-5460	JFETP-CHAN	2N5460
89	4	CR9,CR10,CR11,CR12	342-0001	SILICON 1A 100V .50 SP	1N4002
90	7	CR1,CR2,CR3,CR4,CR5,CR6, CR7,CR13#	342-3009	SILICON .50 SP	1N4148
91	1	CR8	343-3030	1W 6.2V =- 5% .5 SP	1N4735A
92	1	SW1	371-0007	SW QUAD DIP, SIDE ACTUATED	
93	1	SW2	371-0008	DIP SW, 8-POS, SIDE-ACTUATED	
94	1	SW3	371-0024	SPST RA PWB MNT MOM PB	
95	1	Y2	376-0358	XTAL, 3.579545 HC-49 CL=18PF	3.58MHz
96	1	Y3	376-0737	XTAL, 7.3728 MHZ HC-49 CL=18,20PF	7.3728MHz
97	1	Y1	376-1600	XTAL, 16.000 MHZ HC-49 CL=18,20PE	16MHz
98	2	K1,K2	380-0001	SPDT 12V RELAY	
99	1	P2	401-0021	D-SUB, 9-PIN FEMALE, PC MOUNT RIA, PLASTIC	
100	1	P1	401-0059	15 POS R/A HEADER	
101	13	TP1,TP2,TP3,TP4,TP5,TP6, TP7,TP8,TP9,TP10,TP11, TP12#,TP13#,TP14,TP15	403-0001	1 OF 401-0052	
102	0	JP9#,JP5#	403-0002	2 OF 401-0052	
103	13	JP1,JP2,JP3,JP4,JP6,JP8, JP10,JP11,JP14,JP15,JP16, JP17,JP18	403-0003	3 OF 401-0052	
104	2	JP13,JP12	403-0004	4 OF 401-0052	
105	1	JP7	403-0204	8 OF 401-0052 (2X4)	
106	1	F1	416-1576	FUSE AGC 1 A FAST-BLOW	1A
107	4	J1	401-0221	BNC BULKHEAD RECEPTACLE	
108	5	XVR1,XP2(2EA),XJ1(2EA)	210-0001	440 KEPT NUT PLATED	
109	3	XVR1,XP2(2EA)	220-0106	440 X 5/16 PAN HEAD PHILLIPS	
110	2	XJ1	220-0108	440 X 1/4 PAN PHILLIPS	

MODEL 42 CONTROL BOARD PARTS LIST (702-9471F) Continued

ITEM	QTY	COMPONENT REFERENCE	PART NO.	DESCRIPTION	MANUFACTURE P/N
111	3	XY1,XY2,XY3	236-0005	HC-18 CRYSTAL INSULATOR	
112	1	XVR1	381-0010	HEATSINK TO-220 BLACK	
114	1	XP2	401-0042	DB LOCK SCREWS	
115	17	XJP1(POS A),XJP2(POS A), XJP3(HI),XJP4(POS A), XJP6(POS A),XJP7(2)(POS INT), XJP8(POS A),XJP10(POS A), XJP11(POS A),XJP12(POS A), XJP13(POS A),XJP14(POS A), XJP15(POS A),XJP16(POS A), XJP17(POS A),XJP18(POS A)	402-3040	MINI JUMPERS	
116	9	XU1,XU2,XU4,XU5,XU6,XU7, XU8,XU9,XU10	407-0008	SKT, 08 PIN DIP	
117	5	XU11,XU12,XU20,XU25,XU33	407-0014	SKT, 14 PIN DIP	
118	8	XU3,XU19,XU23,XU26,XU28, XU30,XU32,XU36	407-0016	SKT, 16 PIN DIP	
119	5	XU14,XU15,XU16,XU18,XU34	407-0020	SKT, 20 PIN DIP	
120	2	XU13,XU17	407-0023	SKT, 24 PIN SKINNY DIP	
121	4	XU24,XU27,XU29,XU31	407-0028	SKT, 28 PIN DIP	
122	1	XU35	407-0040	SKT, 40 PIN DIP	
123	1	XU21	407-0052	SKT, 52 PIN QUAD	
124	4"	XJ1 (NOTE 16)	408-0012	22GA BARE WIRE	
125	1	PCB	410-9471A	PCB MODEL 42 CONTROL BOARD	
126	1	XJ1 (NOTE 16)	415-9712	BNC X 4 BRACKET	
127	1	XU24	416-1214	28 PIN SOCKET/BATT, 8K/32K	
128	1	XU27	416-1217	28 PIN BATT/WATCH 8K/32K	
129	2	XF1	416-3040	FUSE CLIP	
130	5	XDS4,XDS5,XDS6,XDS7,XDS8	417-0010	RIGHT ANGLE LED HOLDERS	
131	A/R	XVR1	561-0001	THERMAL COMPOUND	
132	A/R	XVR1 (NOTE 18)	561-0015	SILICON RUBBER ADHESIVE SEALANT	

NOTES: Notes are for production use only.

REV	DESCRIPTION	DRN	APV	DATE
A	RELEASE	DGW		11-26-92
B	HCN 2162	GH		4-1-93
C	HCN 2240	DW		
D	HCN 2441	DW		3-18-94
E	HCN 2590	DW		10-12-94
F	ECN 2622B	GH		11-09-94

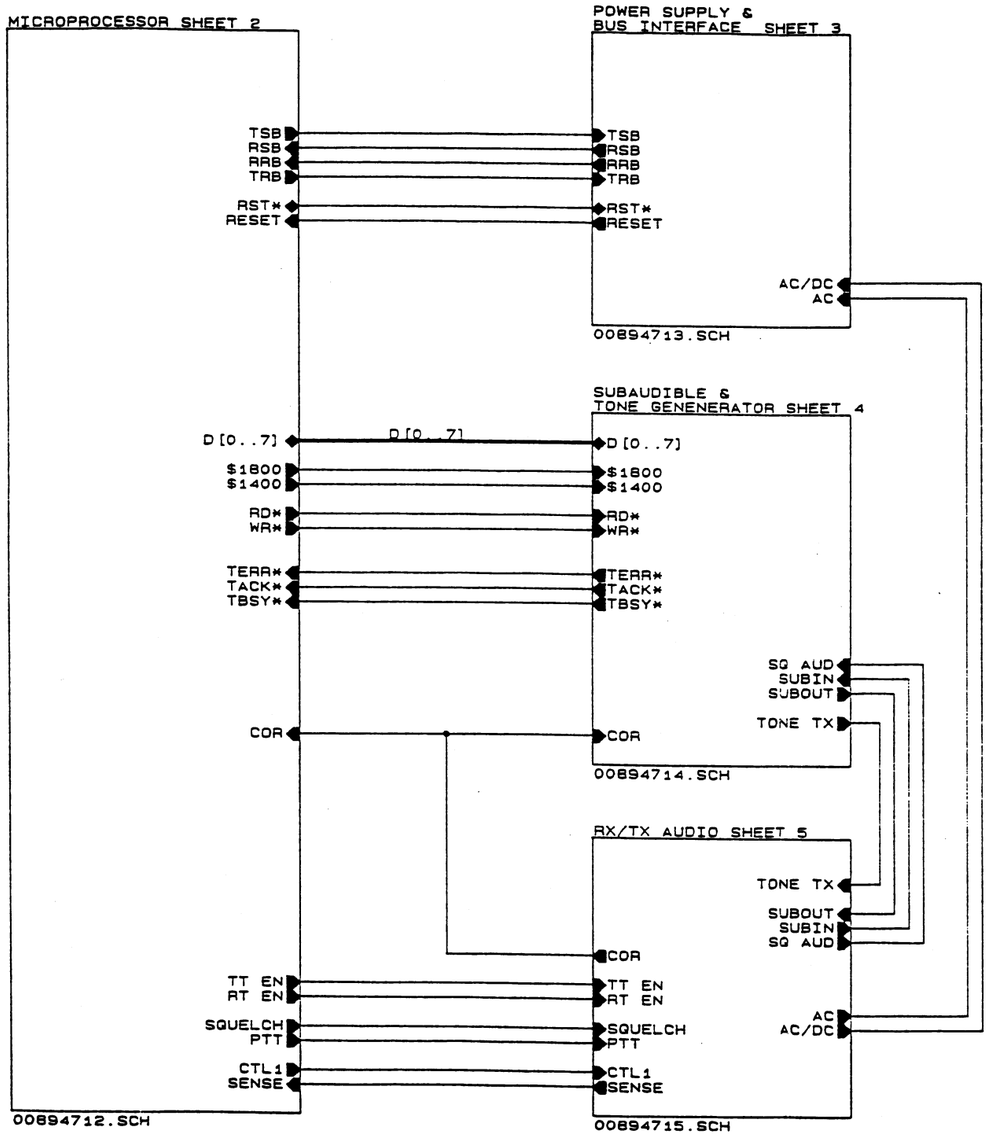

NOTES: UNLESS OTHERWISE SPECIFIED.

1. ALL CAPACITORS ARE IN MICROFARADS.
2. ALL RESISTORS ARE IN OHMS, 1/4W, 5%.
3. ALL POTENTIOMETERS ARE 1 TURN.

UNUSED PARTS:

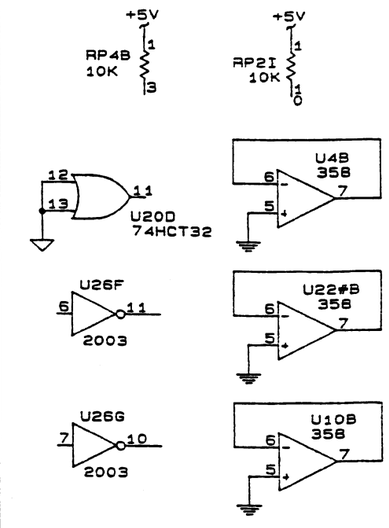

LEGEND:

+	OPTION, INSTALL PER CUSTOMER ORDER.
-	INSTALLED ON HIGHER ASSEMBLY.
#	NOT INSTALLED.
——X——	CUT TRACE.
- - - - - - - - - -	JUMPER WIRE.

ZETRON, INC.
12335 134TH COURT N.E.
REDMOND, WASHINGTON, 9805

Title: MODEL 42 CONTROL BOARD

Size	Document Number	REV
B	008-9471	F

Date: November 18, 1992 Sheet 1 of 5

MICROPROCESSOR CONTROL

RS232 BUFFER

PROGRAM

ADDRESS DECODE

LIGHTS

ZETRON, INC.		
Title: MODEL 42 CONTROL BOARD		
Size: B	Document Number: 008-9471	REV: F
Date: March 31, 1993	Sheet 2 of 5	

BUS INTERFACES

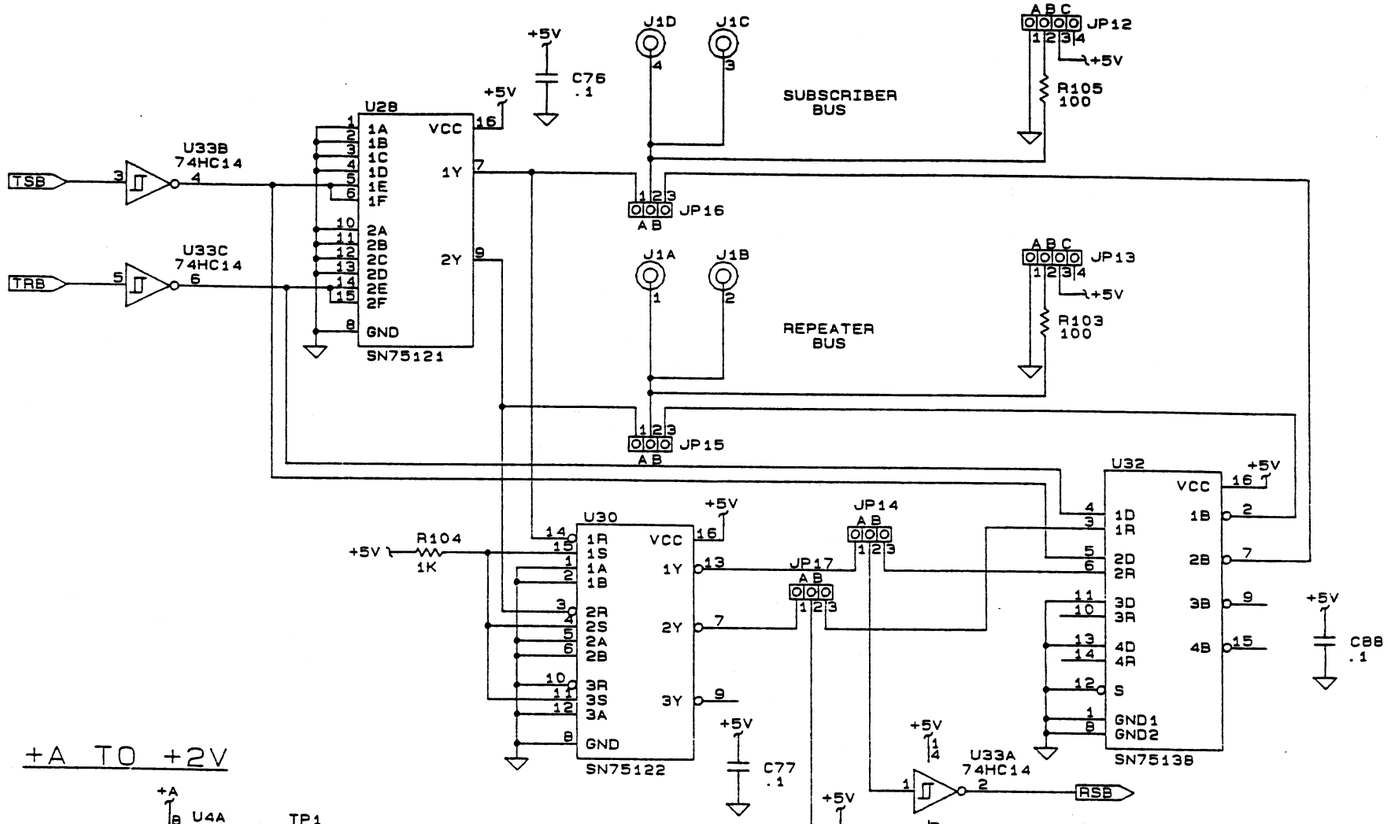

POWER SUPPLY

AC/DC INPUT

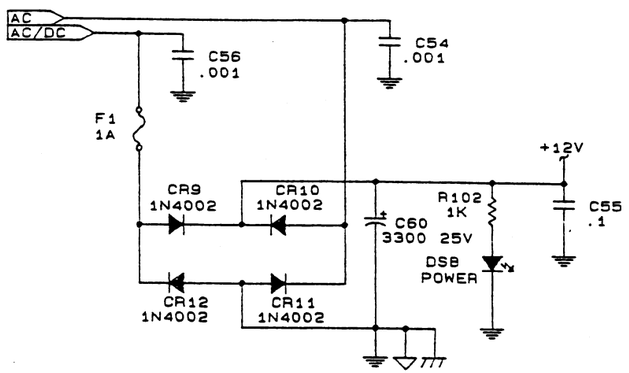

+12V TO +5V

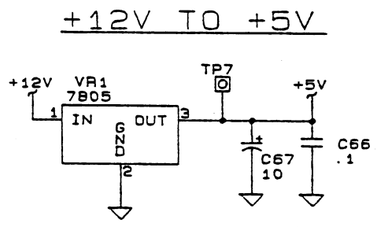

+A TO +2V

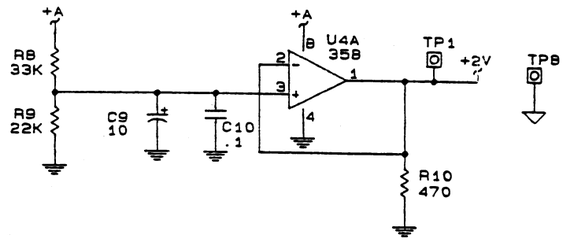

+12V TO +A

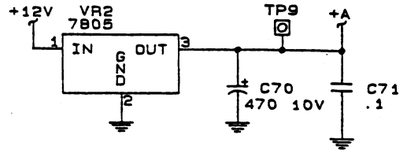

POWER-UP RESET

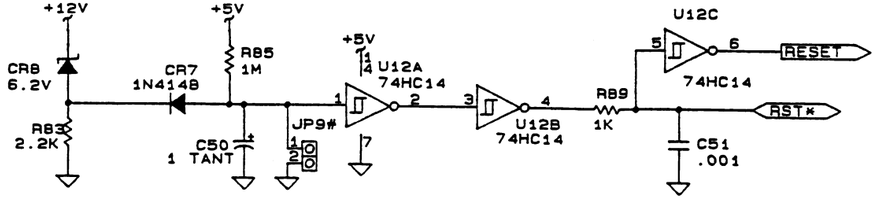

HEATER

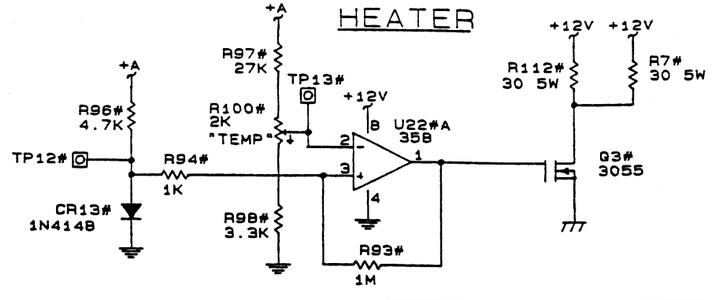

ZETRON INC.		
Title: MODEL 42 CONTROL BOARD		
Size: B	Document Number: 008-9471	REV: F
Date: November 18, 1992	Sheet 3 of 5	

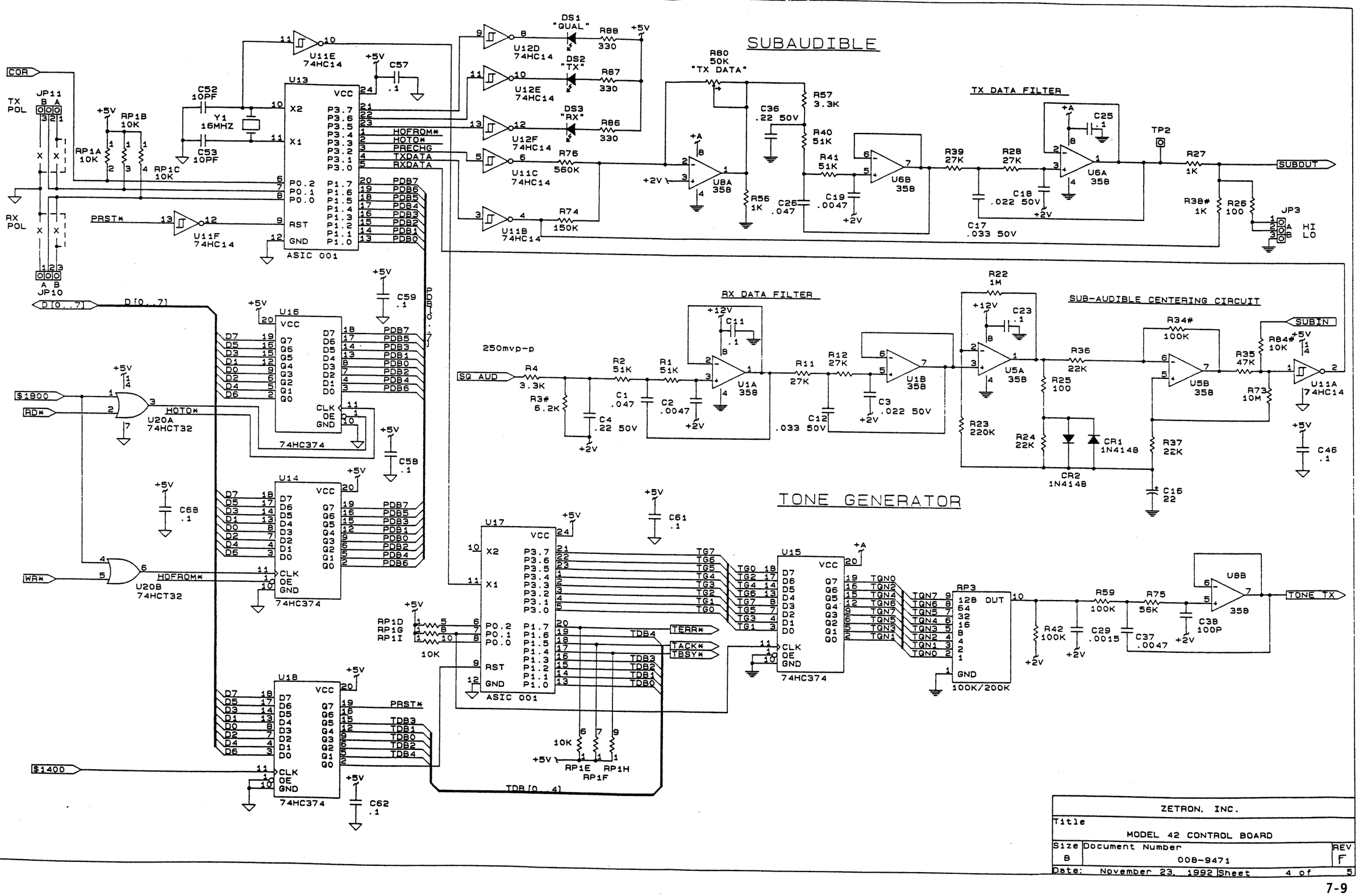
SUBAUDIBLE
TX DATA FILTER
RX DATA FILTER
SUB-AUDIBLE CENTERING CIRCUIT
TONE GENERATOR
ASIC 001
74HC374
U13
U14
U16
U17
U18
U15
U8A 358
U6A 358
U6B 358
U1A 358
U1B 358
U5A 358
U5B 358
U8B 358
U11A 74HC14
U11B 74HC14
U11C 74HC14
U11E 74HC14
U11F 74HC14
U12D 74HC14
U12E 74HC14
U12F 74HC14
U20A 74HCT32
U20B 74HCT32
RP3 100K/200K
DS1 "QUAL"
DS2 "TX"
DS3 "RX"
R80 50K "TX DATA"
R57 3.3K
R40 51K
R41 51K
R56 1K
R39 27K
R28 27K
R27 1K
R38# 1K
R26 100
R76 560K
R74 150K
R88 330
R87 330
R86 330
C36 .22 50V
C26 .047
C19 .0047
C17 .033 50V
C18 .022 50V
C25 .1
TP2
JP3
HI
LO
SUBOUT
SUBIN
250mvp-p
SQ AUD
R4 3.3K
R3# 6.2K
R2 51K
R1 51K
C1 .047
C2 .0047
C4 .22 50V
C11 .1
R11 27K
R12 27K
C12 .033 50V
C3 .022 50V
R22 1M
C23 .1
R36 22K
R25 100
R24 22K
R23 220K
CR1 1N4148
CR2 1N4148
R37 22K
C16 22
R34# 100K
R35 47K
R84# 10K
R73 10M
C46 .1
C61 .1
C59 .1
C58 .1
C68 .1
C62 .1
C57 .1
C52 10PF
C53 10PF
Y1 16MHZ
RP1A 10K
RP1B 10K
RP1C 10K
RP1D
RP1G
RP1I
RP1E
RP1F
RP1H
10K
R59 100K
R75 56K
R42 100K
C29 .0015
C37 .0047
C38 100P
TONE TX
COR
TX POL
RX POL
JP11
JP10
PRST*
HOFROM*
HOTO*
PRECHG
TXDATA
RXDATA
D[0..7]
$1800
RD*
WR*
$1400
TERR*
TACK*
TBSY*
TDB[0..4]
ZETRON, INC.
Title
MODEL 42 CONTROL BOARD
Size B
Document Number 008-9471
REV F
Date: November 23, 1992
Sheet 4 of 5

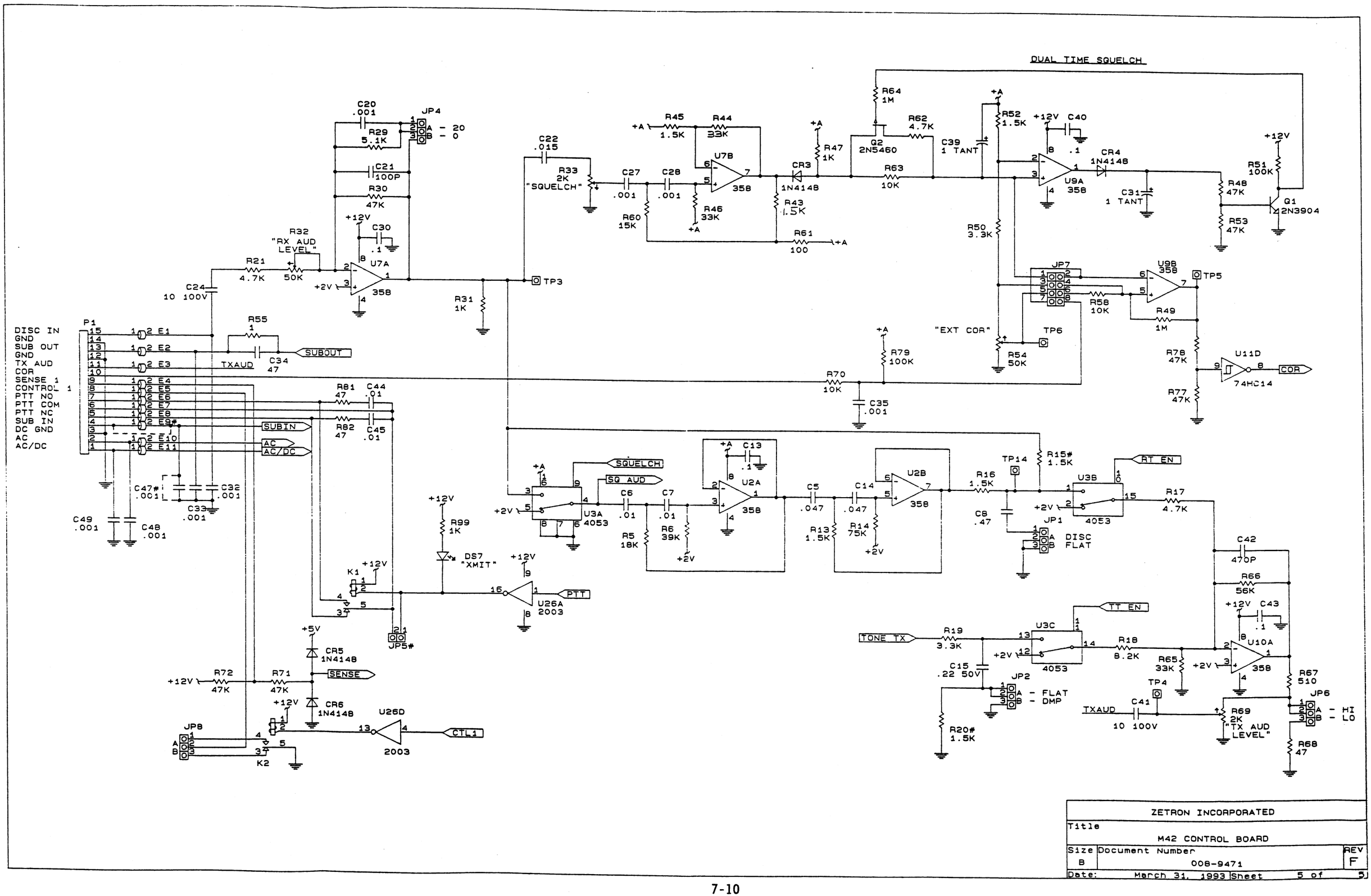

ZETRON INCORPORATED		
Title: M42 CONTROL BOARD		
Size: B	Document Number: 008-9471	REV: F
Date: March 31, 1993	Sheet 5 of 5	

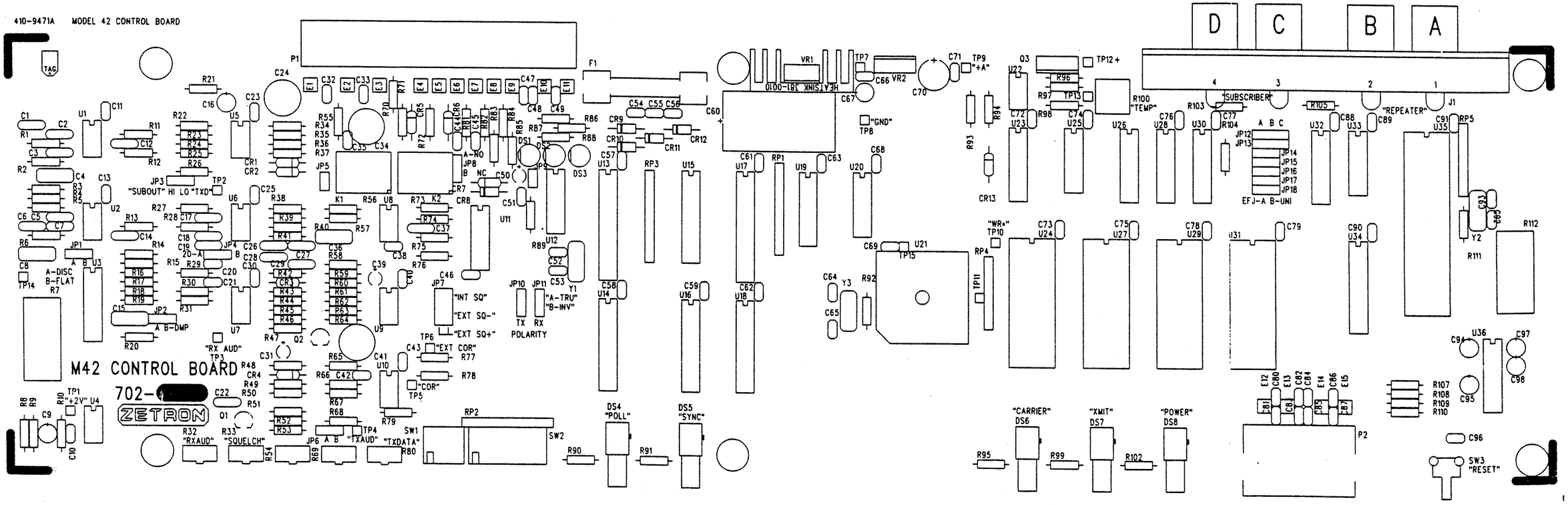
410-9471A MODEL 42 CONTROL BOARD
M42 CONTROL BOARD
702-[redacted]
ZETRON
D
C
B
A
"SUBSCRIBER"
"REPEATER"
"TEMP"
"GND"
"INT SQ"
"EXT SQ-"
"EXT SQ+"
"EXT COR"
"COR"
"A-TRU"
"B-INV"
TX
RX
POLARITY
"RX AUD"
"RXAUD"
"SQUELCH"
"TXAUD"
"TXDATA"
"SUBOUT" HI LO "TXD"
A-DISC
B-FLAT
A B-DMP
"CARRIER"
"XMIT"
"POWER"
"POLL"
"SYNC"
"RESET"
EFJ-A B-UNI
HEATSINK 381-0010

REVISIONS				
REV	DESCRIPTION	DRAWN	APPRVD	DATE
A	RELEASE (ECN 2866)	VP		

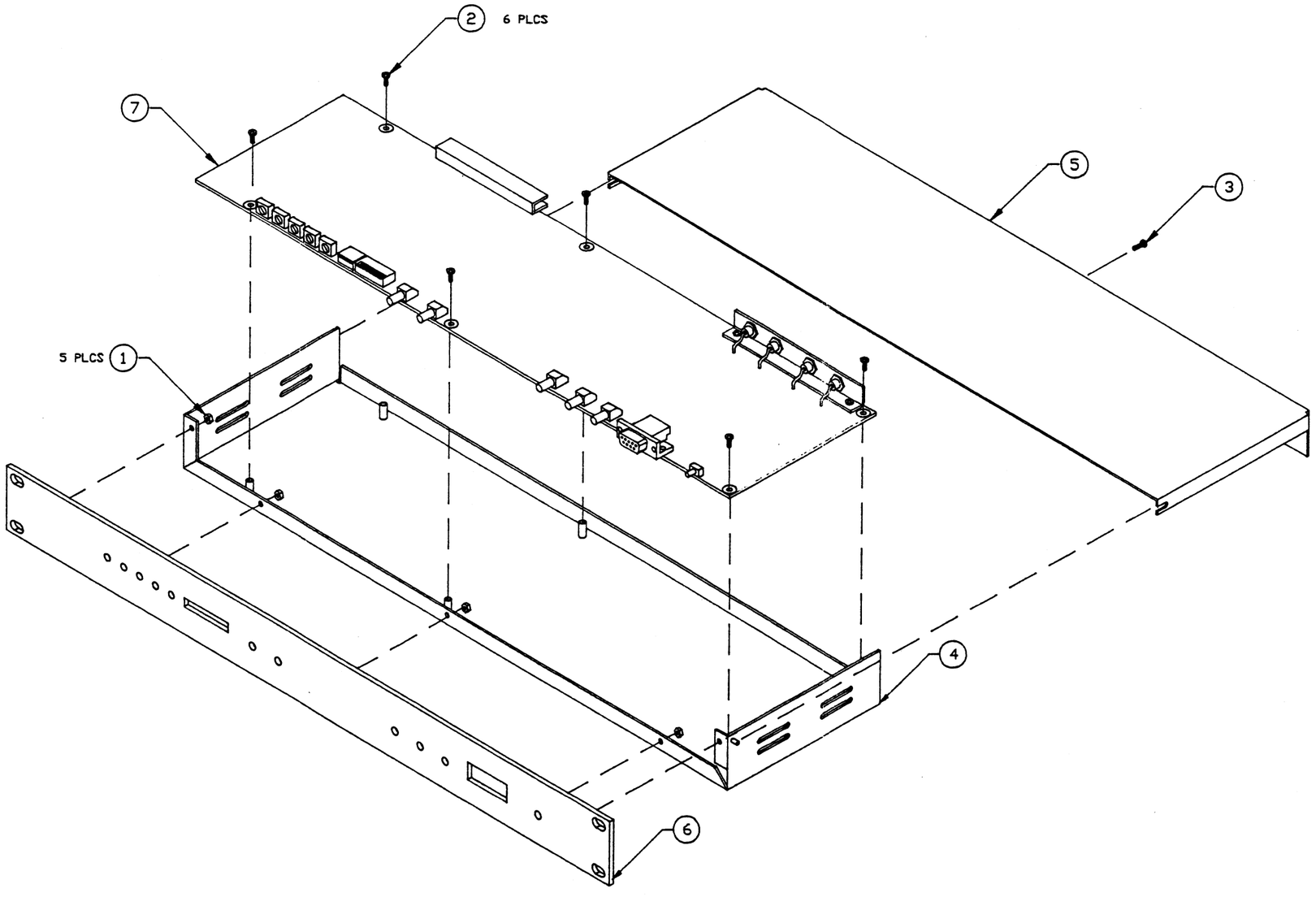

NOTES: REFERENCE 901-9323

ITEM	QTY.	PART #	DESCRIPTION
7	1	702-9518	M42 CONTROL BOARD ASSY
6	1	415-9729-2	M42 FRONT PANEL
5	1	415-9728-1	M42 TOP COVER
4	1	415-9176	M38 BOTTOM COVER
3	1	220-0108	440X1/4 PAN PH.
2	6	220-0102	440X3/8 PAN PH.
1	5	210-0001	440 KEPT NUT

DRN VP 12-09-95
CHK
APV

ZETRON
ZETRON, INC., 12338 134TH COURT NE, REDMOND, WA 98052

TOLERANCES (UNLESS OTHERWISE SPECIFIED)
DECIMAL ±.XX ±.01 ±.XXX ±.005
ANGULAR ± 1°
SCALE 5 = 1
SHEET 1 OF 1

TITLE
M42 CONTROLLER FOR SEA REPEATER

DRAWING NUMBER 024-0166 REV. A SIZE D

DO NOT SCALE DRAWING

MODEL 42 SEA CONTROL BOARD PARTS LIST (702-9518D)

LEGEND:
= NOT INSTALLED
^ = INSTALLED ON HIGHER ASSY
+ = OPTION (INSTALLED PER CUSTOMER ORDER)

ITEM	QTY	COMPONENT REFERENCE	PART NO.	DESCRIPTION	MANUFACTURE P/N
1	1	R55	101-0010	1 OHM 1/4W 5% CARBON FILM	
2	2	R68#,R81,R82	101-0047	47 OHM 1/4W 5% CARBON FILM	
3	2	R25#,R26#,R61#,R103,R105	101-0049	100 OHM 1/4W 5% CARBON FILM	
4	3	R86,R87,R88	101-0061	330 OHM 1/4W 5% CARBON FILM	
5	1	R10	101-0065	470 OHM 1/4W 5% CARBON FILM	
6	1	R67	101-0066	510 OHM 1/4W 5% CARBON FILM	
7	14	R27#,R31,R38,R47,R56#, R89,R90,R91,R94#,R95,R99, R102,R104,R107,R108,R109, R110	101-0073	1K 1/4W 5% CARBON FILM	
8	2	R13#,R15,R16#,R20#,R43#, R45#,R52	101-0075	1.5K 1/4W 5% CARBON FILM	
9	1	R83	101-0081	2.2K 1/4W 5% CARBON FILM	
10	2	R4#,R19,R50,R57#,R98#	101-0085	3.3K 1/4W 5% CARBON FILM	
11	2	R17,R21,R62#,R96#	101-0089	4.7K 1/4W 5% CARBON FILM	
12	1	R29	101-0090	5.1K 1/4W 5% CARBON FILM	
13	0	R3#	101-0092	6.2K 1/4W 5% CARBON FILM	
14	1	R18	101-0095	8.2K 1/4W 5% CARBON FILM	
15	4	R58,R63,R70,R84	101-0097	10K 1/4W 5% CARBON FILM	
16	0	R60#	101-0101	15K 1/4W 5% CARBON FILM	
17	0	R5#	101-0103	18K 1/4W 5% CARBON FILM	
18	1	R9,R24#,R36#,R37#	101-0105	22K 1/4W 5% CARBON FILM	
19	0	R11#,R12#,R28#,R39#,R97#	101-0107	27K 1/4W 5% CARBON FILM	
20	4	R8,R44,R46,R65	101-0109	33K 1/4W 5% CARBON FILM	
21	0	R6#	101-0111	39K 1/4W 5% CARBON FILM	
22	5	R30,R35#,R48#,R53#,R71, R72,R77,R78	101-0113	47K 1/4W 5% CARBON FILM	
23	0	R1#,R2#,R40#,R41#	101-0114	51K 1/4W 5% CARBON FILM	
24	2	R75,R66	101-0115	56K 1/4W 5% CARBON FILM	
25	0	R14#	101-0118	75K 1/4W 5% CARBON FILM	
26	3	R34#,R42,R51#,R59,R79	101-0121	100K 1/4W 5% CARBON FILM	
27	0	R74#	101-0125	150K 1/4W 5% CARBON FILM	
28	0	R23#	101-0129	220K 1/4W 5% CARBON FILM	
29	0	R76#	101-0139	560K 1/4W 5% CARBON FILM	
30	3	R22#,R49,R64#,R85,R93#, R111	101-0145	1M 1/4W 5% CARBON FILM	
31	1	R73#,R92	101-0160	10M 1/4W 5% CARBON FILM	
32	0	R112#,R7#	103-0030	30 OHM 5W 5%	PW5-30-5%
33	1	R69,R33#	107-0003	2K POT 1 TURN R/A	3386X-1-202
34	2	R32,R54,R80#	107-0015	50K POT 1 TURN R/A	3386X-1-503
35	0	R100#	107-0202	2K POT 1 TURN	3386P-1-202
36	2	RP2,RP1	119-0006	10K x 9 R-SIP	4610X-101-103
37	2	RP4,RP5	119-0008	10K x 7 R-SIP	EXB-F8E103G or J
38	1	RP3	119-0021	R/2R 100K/200K 10 PIN	RSC10L104G

MODEL 42 SEA CONTROL BOARD PARTS LIST (702-9518D) Continued

ITEM	QTY	COMPONENT REFERENCE	PART NO.	DESCRIPTION	MANUFACTURE P/N
39	4	C52,C53,C92,C93	151-0001	10PF 50V CERAMIC, TEMPERATURE STABLE	C315C100K2G5CA
40	2	C38,C21	151-0010	100PF 50V/100V +-10%/5% CERAMIC, TEMPERATURE STABLE	CW15C101K
41	18	C20,C32,C33,C35,C47,C48, C49,C51,C54,C56,C80,C81, C82,C83,C84,C85,C86,C87	151-0020	.001UF 50V +-10% CERAMIC, TEMPERATURE STABLE	CW15C102K
42	2	C65,C64	151-0022	22PF 50V +-10%/5%	CW15C220K
43	1	C42	151-0047	470PF 50V +-10%/5% CERAMIC, TEMPERATURE STABLE	CW15C471K
44	3	C44,C45,C96	151-0120	.01UF 50V +-10% CERAMIC, TEMPERATURE STABLE	CW15C103K
45	28	C10,C11#,C13#,C23#,C25#, C30,C40,C43,C46,C55,C57, C58,C59,C61,C62,C63,C66, C68,C69,C71,C72,C73,C74, C75,C76,C77,C78,C79,C88, C89,C90,C91	151-0180	.1UF 50V +-10% CERAMIC, UNSTABLE	AVXSR205E104MAA
46	0	C8#	151-0199	.47UF 50V +-5%, POLYESTER	ECQVIH474JZ
47	0	C22#	152-0015	.015 UF 50V +-5% POLYESTER	ECQ-V1H1JZ
48	1	C34	152-0047	47UF 25V 20% NON-POLAR ELECTROLYTIC	UEB1E470MPA
49	2	C41,C24	152-0050	10 UF 100V 20% NON-POLAR ELECTROLYTIC	UVP2A100MPA
50	1	C4#,C15,C36#	152-0080	.22 UF 50V +-5%	ECQ-V1H224JZ
51	0	C6#,C7#	152-0085	.01 UF 50V +- 5% POLYESTER	ECQ-V1H103JZ
52	1	C2#,C19#,C37	152-0088	.0047UF 50V +-5% POLYESTER	ECQ-B1H472JZ
53	0	C27#,C28#	152-0089	.001 UF 50V +-5% POLYESTER	ECQB1H102JZ
54	0	C18#,C3#	152-0122	.022 UF 50V 5% POLYESTER	ECQ1H223JZ
55	0	C17#,C12#	152-0130	.033 UF 50V 5% POLYESTER	ECQ-V1H333JZ
56	1	C29	152-0152	.0015 UF 50V 5% POLYESTER	ECQB1H152JZ
57	0	C1#,C5#,C14#,C26#	152-0250	.047 UF 50V 5% POLYESTER	ECQ-V1H473JZ
58	1	C31#,C39#,C50	154-0025	1 UF 35V TANTALUM	ECS-F-35E1
59	4	C94,C95,C97,C98 (NOTE 3)	154-0100	10 UF 16V TANTALUM	ECS-FICE106K
60	2	C67,C9	155-0052	10 UF 35V +-20% RADIAL ALUMINUM ELECTROLYTIC	ECEA1VU100
61	0	C16#	155-0053	22UF 35V RADIAL ALUMINUM ELECTROLYTIC	ECEA1VU220
62	1	C70	155-0083	470 UF 10 VOLT RADIAL ALUMINUM ELECTROLYTIC	ECEA-1AU471
63	1	C60	155-0140	3300 UF 25V +50%-10% AXIAL ALUMINUM ELECTROLYTIC	ECEB1EU332
64	15	E1,E2,E3,E4,E5,E6,E7,E8, E9,E10,E11,E12,E13,E14, E15	305-0001	FERRITE BEADS W/ LEADS	11413-3B
65	7	DS1,DS2,DS3,DS4,DS5,DS6, DS7	311-0011	LED RED FLUSH	LT741R-81
66	1	DS8	311-0012	LED GREEN FLUSH	TLSG-5201
67	1	U36	316-0232	RS232 DRIVER CMOS	AD232JN
68	5	U1#,U2#,U4,U5#,U6#,U7, U8,U9,U10,U22#	316-0358	OP-AMP, DUAL	LM358N
69	2	VR2,VR1	316-7805	REGULATOR, +5V 1.5A	LM340T-5
70	1	U28	317-5121	DUAL LINE RECEIVER	SN75121
71	1	U30	317-5122	TRIPLE LINE RECEIVER	SN75122
72	1	U32	317-5138	QUAD BUS XCOR	SN75138
73	2	U17,U13 (NOTE 1)	321-0751	CMOS MICRO, 0 TO 70C, 3.5 TO 12MHZ	ASIC 001
74	1	U35	321-2181	DUAL UART	2681

MODEL 42 SEA CONTROL BOARD PARTS LIST (702-9518D) Continued

ITEM	QTY	COMPONENT REFERENCE	PART NO.	DESCRIPTION	MANUFACTURE P/N
75	1	U21	321-6811	UP-HC MOS	MOT68HC11A0FN
76	2	U27,U24	321-8256	32K X 8 RAM LP	HPD43256-15L
77	2	U31,U29 (U31)(NOTE 1)	322-7256	32Kx8 CMOS EPROM	AM27C256-200DC
78	1	U3	323-4053	3PDT SWITCH	MC144053
79	2	U23,U19	324-4138	DECODER 1 OF 8	MCH74HC138
80	1	U34	324-4373	OCTAL LATCH	MC74HC373
81	4	U14,U15,U16,U18	324-4374	OCTAL DFF REG	MC74HC374N
82	1	U25	324-7400	QUAD NAND	MC74HC00
83	3	U11,U12,U33	324-7414	HEX SCHMIDT	74HC14
84	1	U20	325-7432	QUAD OR GATE	MM74HCT32
85	1	U26	340-2003	RELAY DRIVER 50V/.5A	ULN2003
86	0	Q3#	340-3055	12A 60V N FET	MTP3055A
87	0	Q1#	340-3904	NPN 40V/200MA	2N3904
88	0	Q2#	340-5460	JFETP-CHAN	2N5460
89	4	CR9,CR10,CR11,CR12	342-0001	SILICON 1A 100V .50 SP	1N4002
90	3	CR1#,CR2#,CR3#,CR4#,CR5, CR6,CR7,CR13#	342-3009	SILICON .50 SP	1N4148
91	1	CR8	343-3030	1W 6.2V +-5% .50 SP	1N4735A
92	1	SW1	371-0007	SW QUAD DIP	CTS-194-4S
93	1	SW2	371-0008	SW OCTAL DIP	CTS-194-8ST
94	1	SW3	371-0024	SPST RA PWB MNT MOM PB	SKHHLS
95	1	Y2	376-0358	3.58 MHz HC 18 CASE	SKO-DS357
96	1	Y3	376-0737	7.3728MHz XTAL HC-18	MP49-7.3728 18pf
97	1	Y1	376-1600	16 MHz HC-18 CASE	160
98	1	K1,K2#	380-0001	SPDT 12V	M2-12HG-C
99	1	P2	401-0021	DB9 S	DEP-9S-CA
100	1	P1	401-0059	15 POS R/A HEADER	6923.6
101	1	J1 (NOTE 2)	401-0221	BNC BULKHEAD RECEPTACLE	
102	13	TP1,TP2,TP3,TP4,TP5,TP6, TP7,TP8,TP9,TP10,TP11, TP12#,TP13#,TP14,TP15	403-0001	1 OF 401-0052	
103	0	JP9#,JP5#	403-0002	2 OF 401-0052	
104	7	JP1#,JP2,JP3#,JP4,JP6#, JP8#,JP10#,JP11#,JP14, JP15,JP16,JP17,JP18	403-0003	3 OF 401-0052	
105	2	JP13,JP12	403-0004	4 OF 401-0052	
106	1	JP7	403-0204	8 OF 401-0052 (2X4)	
107	1	F1	416-1576	FUSE AGC 1 A	AGC 1
108	5	XVR1,XP2(2EA),XJ1(2EA)	210-0001	440 KEPT NUT PLATED	
109	3	XVR1,XP2(2EA)	220-0101	440 X 5/16 FALAT HEAD PHILLIPS	
110	2	XJ1	220-0108	440 X 1/4 PAN PHILLIPS	
111	3	XY1,XY2,XY3	236-0005	HC-18 CRYSTAL INSULATOR	
112	1	XVR1	381-0010	HEATSINK TO-220 BLACK	
113	1	XP2	401-0042	DB LOCK SCREWS	

MODEL 42 SEA CONTROL BOARD PARTS LIST (702-9518D) Continued

ITEM	QTY	COMPONENT REFERENCE	PART NO.	DESCRIPTION	MANUFACTURE P/N
114	11	XJP2(POS A),XJP4(POS B), XJP7(2)(POS EXT SQ-), XJP12(POS A),XJP13(POS A), XJP14(POS A),XJP15(POS A), XJP16(POS A),XJP17(POS A), XJP18(POS A)	402-3040	MINI JUMPERS	
115	5	XU4,XU7,XU8,XU9,XU10	407-0008	SKT, 08 PIN DIP	
116	5	XU11,XU12,XU20,XU25,XU33	407-0014	SKT, 14 PIN DIP	
117	8	XU3,XU19,XU23,XU26,XU28, XU30,XU32,XU36	407-0016	SKT, 16 PIN DIP	
118	5	XU14,XU15,XU16,XU18,XU34	407-0020	SKT, 20 PIN DIP	
119	2	XU13,XU17	407-0023	SKT, 24 PIN SKINNY DIP	
120	4	XU24,XU27,XU29,XU31	407-0028	SKT, 28 PIN DIP	
121	1	XU35	407-0040	SKT, 40 PIN DIP	
122	1	XU21	407-0052	SKT, 52 PIN QUAD	
123	4"	XJ1 (NOTE 2)	408-0012	22GA BARE WIRE	
124	1	PCB	410-9471A	PCB MODEL 42 CONTROL BOARD	
125	1	XJ1 (NOTE 2)	415-9712	BNC X 4 BRACKET	
126	1	XU24	416-1214	28 PIN SOCKET/BATT 8K/32K	
127	1	XU27	416-1217	28 PIN BATT/WATCH 8K/32K	
128	2	XF1	416-3040	FUSE CLIP	
129	5	XDS4,XDS5,XDS6,XDS7,XDS8	417-0010	RIGHT ANGLE LED HOLDERS	
130	A/R	XVR1	561-0001	THERMAL COMPOUND	
•131	A/R	XVR1(NOTE 4)	561-0015	SILICON RUBBER ADHESIVE	

NOTES: Notes are for production use only.

REV	DESCRIPTION	DRN	APV	DATE
A	RELEASE	DGW		
B	HCN 2162	GH	[illegible]	[illegible]
C	HCN 2240	DW		
D	ECN 2622B	GH	GH	11-09-91

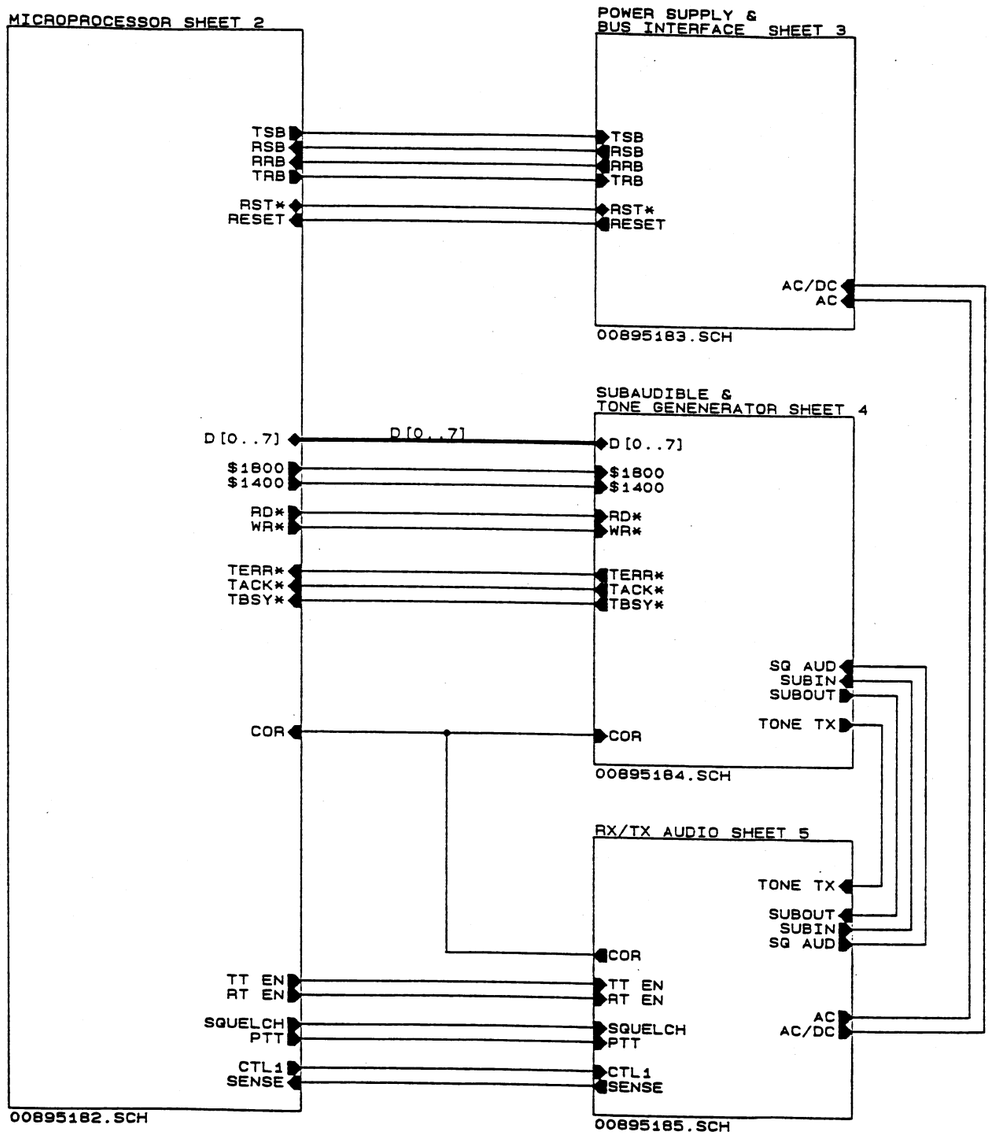

NOTES: UNLESS OTHERWISE SPECIFIED.

1. ALL CAPACITORS ARE IN MICROFARADS.
2. ALL RESISTORS ARE IN OHMS, 1/4W, 5%.
3. ALL POTENTIOMETERS ARE 1 TURN.

UNUSED PARTS:

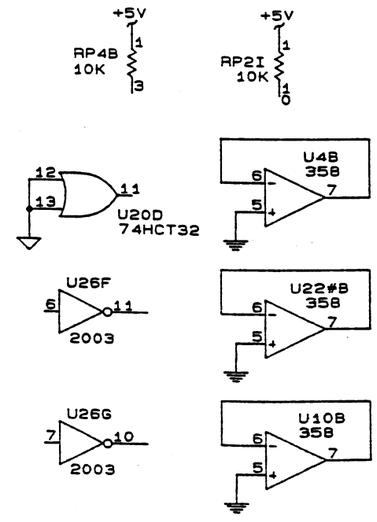

LEGEND:

+	OPTION, INSTALL PER CUSTOMER ORDER.
-	INSTALLED ON HIGHER ASSEMBLY.
#	NOT INSTALLED.
——X——	CUT TRACE.
- - - - - - - - - -	JUMPER WIRE.

ZETRON, INC.
12335 134TH COURT N.E.
REDMOND, WASHINGTON, 9805

Title: MODEL 42 CONTROLLER FOR SEA REPEATER

Size	Document Number	REV
B	008-9518	D

Date: March 31, 1993 Sheet 1 of 5

MICROPROCESSOR CONTROL

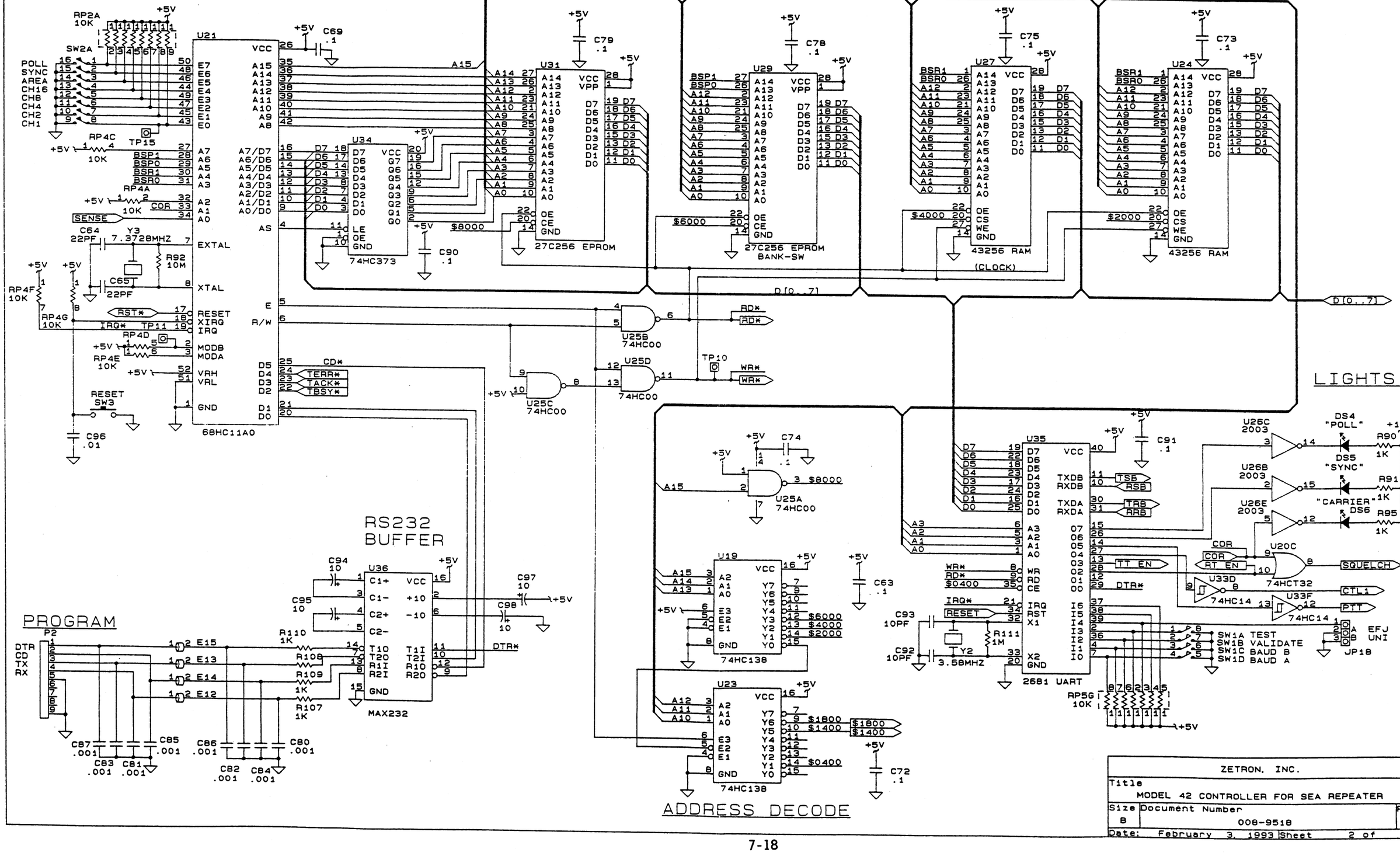

ZETRON, INC.		
Title: MODEL 42 CONTROLLER FOR SEA REPEATER		
Size: B	Document Number: 008-9518	REV: D
Date: February 3, 1993	Sheet 2 of 5	

POWER SUPPLY

AC/DC INPUT

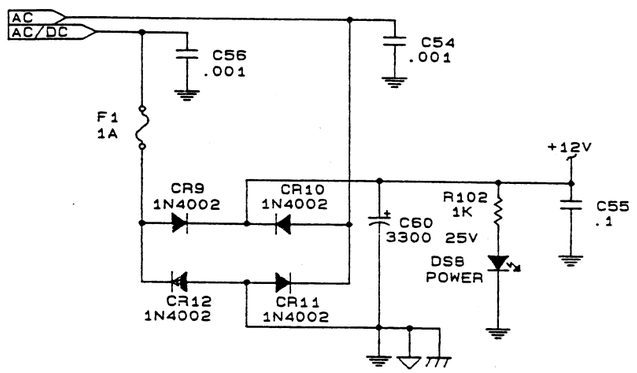

+12V TO +5V

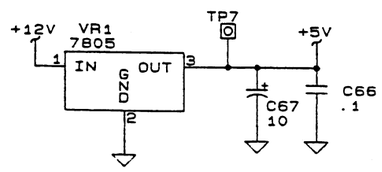

+12V TO +A

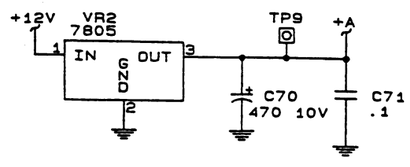

+A TO +2V

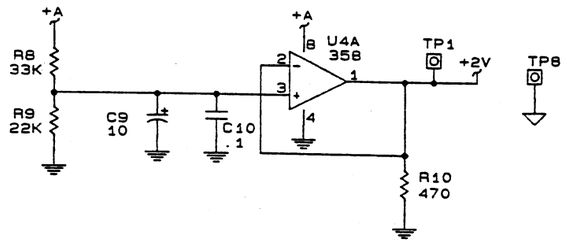

POWER-UP RESET

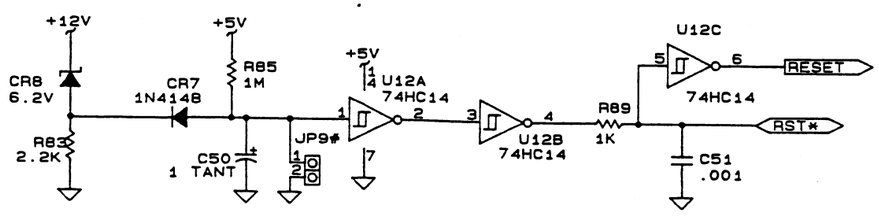

BUS INTERFACES

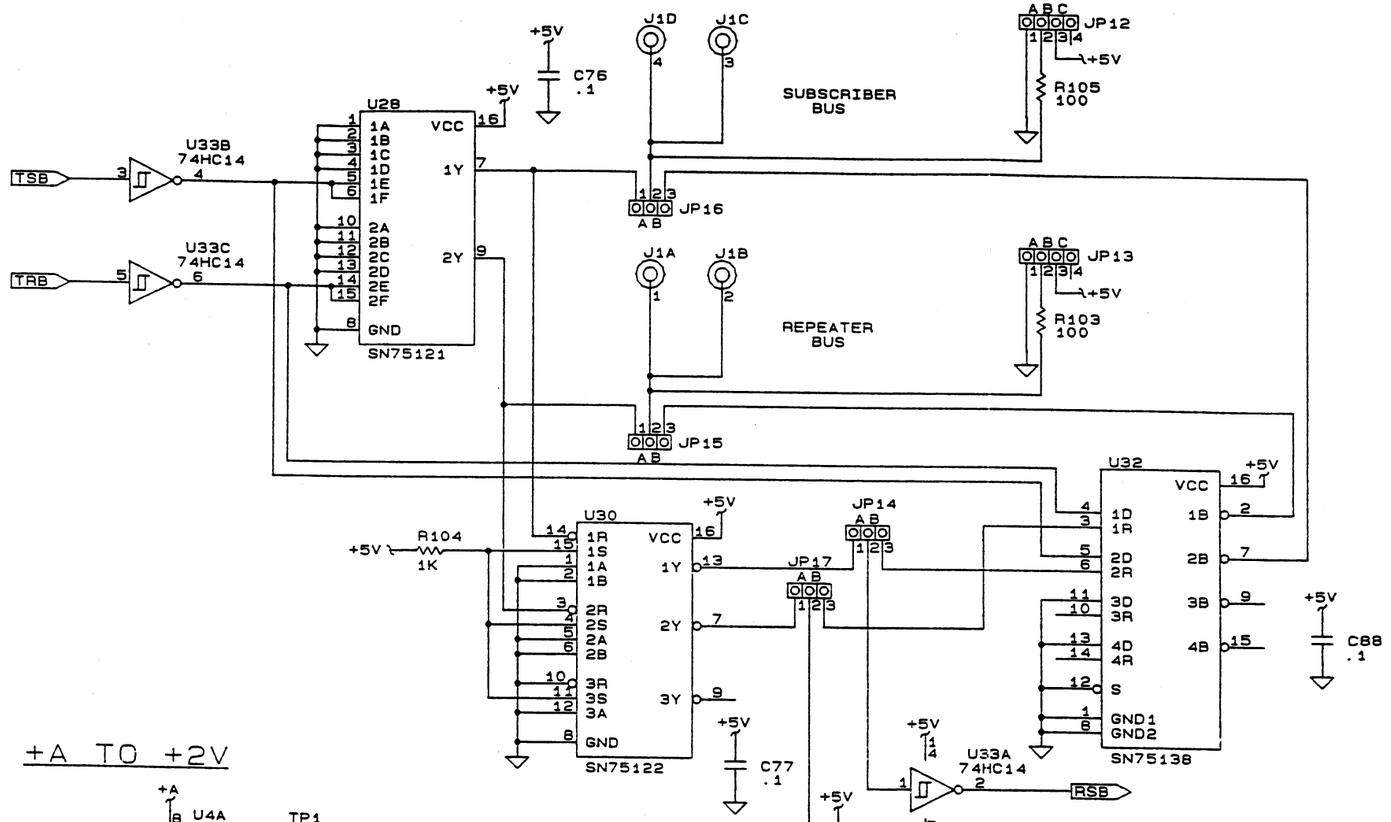

HEATER

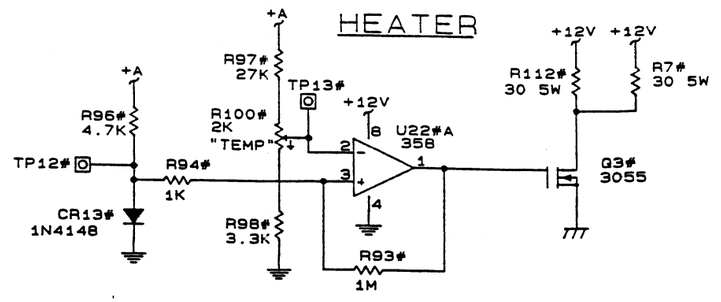

ZETRON INC.		
Title: MODEL 42 CONTROLLER FOR SEA REPEATER		
Size: B	Document Number: 008-9518	REV: D
Date: February 3, 1993	Sheet 3 of 5	

SUBAUDIBLE

TX DATA FILTER

RX DATA FILTER

SUB-AUDIBLE CENTERING CIRCUIT

TONE GENERATOR

ZETRON, INC.		
Title: MODEL 42 CONTROLLER FOR SEA REPEATER		
Size: B	Document Number: 008-9518	REV: D
Date: February 3, 1993	Sheet 4 of 5	

DUAL TIME SQUELCH

C20 .001
JP4 A - 20 B - 0
R29 5.1K
C21 100P
R30 47K
+12V C30 .1
R32 "RX AUD LEVEL"
R21 4.7K
50K
C24 10 100V
+2V
U7A 358
R31 1K
TP3
C22# .015
R33# 2K "SQUELCH"
C27# .001
C28# .001
R60# 15K
R45# 1.5K
R44 33K
R46 33K
U7B 358
CR3# 1N4148
R43# 1.5K
R61# 100
+A
R47 1K
R64# 1M
R62# 4.7K
Q2# 2N5460
R63 10K
C39# 1 TANT
R52 1.5K
+12V C40 .1
U9A 358
CR4# 1N4148
C31# 1 TANT
R48# 47K
R53# 47K
R51# 100K
Q1# 2N3904
R50 3.3K
JP7
U9B 358
TP5
R58 10K
R49 1M
"EXT COR"
TP6
R54 50K
R79 100K
R70 10K
C35 .001
R78 47K
U11D 74HC14
COR
R77 47K

P1
DISC IN
GND
SUB OUT
GND
TX AUD
COR
SENSE 1
CONTROL 1
PTT NO
PTT COM
PTT NC
SUB IN
DC GND
AC
AC/DC
R55 1
C34 47
TXAUD
SUBOUT
R81 47
C44 .01
R82 47
C45 .01
SUBIN
AC
AC/DC
C47 .001
C32 .001
C33 .001
C49 .001
C48 .001

SQUELCH
SQ AUD
U3A 4053
C6# .01
C7# .01
R5# 18K
R6# 39K
C13# .1
U2#A
U2#B 358
C5# .047
C14# .047
R13# 1.5K
R14# 75K
R15 1.5K
TP14
R16# 1.5K
C8# .47
U3B 4053
RT EN
R17 4.7K
JP1# DISC FLAT
C42 470P
R66 56K
+12V C43 .1
TT EN
TONE TX
R19 3.3K
U3C 4053
C15 .22 50V
JP2 A - FLAT B - DMP
R20# 1.5K
R18 8.2K
U10A 358
R65 33K
TP4
C41 10 100V
TXAUD
R69 2K "TX AUD LEVEL"
R67 510
JP6# A - HI B - LO
R68# 47

+12V R99 1K
DS7 "XMIT"
K1
U26A 2003
PTT
JP5# 2:1
+5V
CR5 1N4148
CR6 1N4148
R72 47K
R71 47K
SENSE
JP8#
K2#
U26D 2003
CTL1

ZETRON INCORPORATED

Title: M42 CONTROLLER FOR SEA REPEATER

Size	Document Number	REV
B	008-9518	D

Date: March 31, 1993 Sheet 5 of 5

8. APPENDIX

Glossary 8-1

Model 42 low power conversion 8-5

Power Conversion Table 8-6

8. APPENDIX

GLOSSARY

ACCPAC	Accounting software.
ASCII	American Standard Code for Information Interchange.
Call Detail	A detailed listing of interconnect calls that were made. This would include the ID, phone number called, time of day call was made, and length of call.
Carrier	Unmodulated RF energy that carries desired information.
CAS	Carrier Activated Squelch. See COR.
Channel	A specific transmitter frequency and receiver frequency for electromagnetic signals.
CO	Central Office. A switching system serving a group of customer lines within a particular area.
COG	Centralized Operations Group. A group within the phone company that takes interface orders.
Comm Port	Communications port. Device used in a computer to talk with the outside world.
Companding	Process that improves the telephone interconnect audio fidelity. This is done by reducing the noise introduced by radio signal propagation.
Conventional	Community style repeater with no trunking.
COR	Carrier Operated Relay. Circuit used to detect that the carrier signal is present.
COS	Carrier Operated Squelch. See COR.
CTCSS	Continuous Tone Carrier Squelch System. Subaudible tone signaling used to mute a receiver.
CTL	Control. An output on the M42 that is used for cross-busying and alarms.
dB	Decibel. A method of comparing two signals on a logarithmic scale.
dBm	Decibel Measurement Relative To One Milliwatt. A method of comparing a signal's power against 1 milliwatt. This ratio is based on the logarithmic scale.

DID — Direct Inward Dialing. Type of telephone line that represents a bank of sequential numbers. When a caller dials one of the numbers, the phone equipment signals the last 2 to 7 digits of the phone number across the phone wire pair.

Dispatch — A mobile to mobile call.

DPL — Digital Private Line. Digitally coded system for two-way radio.

DSC — Digital Squelch Control. See DPL.

E&M Four-Wire — Earphone and Mouthpiece. Type of line that carries two wire pairs (four wires) for audio and one pair for call supervision (E-lead and M-lead.)

E-E — End to End. Transmits and receives telephone signals over two wires.

Full Duplex — A call in which audio can be transmitted and received at the same time.

Group — Term used in LTR mobile programming to designate an ID in a System.

Half Duplex — A call in which audio may be sent in only one direction at a time.

HDB — High-speed Data Bus.

Home — A channel in an LTR system that mobiles listen to for trunking information.

icom — A plug-in circuit containing both a crystal and temperature compensator.

ID — Identification. A three-digit number used in LTR to designate a user on a particular home repeater.

Interconnect — A landside-to-mobile or mobile-to-landside call.

ISQ — Internal Squelch. Circuit that is used to detect audio signal and mute the signal if only noise is found.

LTR — Logic Trunked Radio. EF Johnson signaling format used for trunked radio systems.

MMDD — Month digits (MM) and day digits (DD).

Packet — Data transmitted by a mobile or repeater that is used to control the trunking and security features of LTR.

Poll Master Channel in Zetron LTR system that controls the Subscriber Bus.

PSTN — Public Switch Telephone Network.

PTC — Push To Connect. A method of initiating a call. A person only needs to key up and the call is started.

PTT — Push To Talk. A switch closure that activates the transmitter.

RAM — Random Access Memory. Electronic device used to store information.

RCC — Radio Common Carrier.

Repeater Bus — Communications line used on LTR equipment to share channel activity between channels. The Sync LED indicates this activity.

RIC — Repeater Interconnect Controller. EF Johnson's interconnect logic.

RNDL — Repeater Network Data Link. Uniden's version of the Repeater Bus.

RUS — Receiver Unoperated Squelch. See COR.

Sense — An input on the Model 42 that is used for cross-busying and alarms.

Simplex — A call in which audio may be sent in only one direction.

SMDR — Site Management Detail Records. See Call Detail.

SMR — Specialized Mobile Radio.

Subaudible Data — Signaling format used in LTR for data exchange between mobiles and the repeater managers. This data is transmitted below the audible region at approximately 300 Hz.

Sub Out — An output signal on the Model 42 that goes to the repeater. This signal is then transmitted by the repeater. This signal is the subaudible data.

Subscriber Bus — Communications line that carries database and billing data between Zetron's Model 42. The Poll LED indicates this activity.

Sync — A signal the Sync Master applies to the Repeater Bus. This signal is used for timing by the channels to properly control data on the Repeater Bus.

Sync Master Channel in LTR system that generates sync on the Repeater Bus.

System	Term used in LTR mobile programming to define a group of channels making up a "trunk group", and a home channel within that group.
TLA	Trunk Line Accounting. EF Johnson's accounting bus for their LTR equipment.
TOT	Time Out Timer. Term used in programming LTR mobiles that sets the maximum time the mobile can remain keyed-up.
Trunked	A mobile that has gone to a non-home channel as the home channel is busy.
Trunking	The pooling of a group of radio channels in which all users have automatic access to all channels.
VOX	Voice Operated Relay. A circuit that detects if there is voice present.
ZEBRA	Zetron's billing software.

MODEL 42 LOW POWER CONVERSION

By performing the following operations, the idle current may be significantly reduced for the Model 42 as noted below.

Typical Standard Idle Current = 350 mAdc
Typical Low Power Idle Current = 240 mAdc

* Replace U35 with Low Power version DUART
  Standard 2681 DUART: Zetron p/n 321-2181
  Low Power 2692 DUART: Zetron p/n 321-2182

* Optionally Replace the current limiting resistors for the POLL, SYNC, POWER, and CARRIER LEDs to further decrease power use:

POLL LED:	R90	= 2.2K Ohm (or remove to disable)	p/n 101-0081
SYNC LED:	R91	= 2.2K Ohm (or remove to disable)	p/n 101-0081
POWER LED:	R102	= 2.2K Ohm (or remove to disable)	p/n 101-0081
CARRIER LED:	R95	= 2.2K Ohm (or remove to disable)	p/n 101-0081

POWER CONVERSION TABLE

Power Conversion Table for 600 Ohm Load

Power		Single Tone		Dual Tone	
(dBm)	(mW)	(Vp-p)	(Vrms)	(Vp-p)	(Vrms)
10	10.00	6.93	2.45	9.80	3.47
9	7.94	6.17	2.18	8.73	3.09
8	6.31	5.50	1.95	7.78	2.75
7	5.01	4.90	1.73	6.94	2.45
6	3.98	4.37	1.55	6.18	2.19
5	3.16	3.90	1.38	5.51	1.95
4	2.51	3.47	1.23	4.91	1.74
3	2.00	3.09	1.09	4.38	1.55
			(mVrms)		
2	1.59	2.76	975	3.90	1.38
1	1.26	2.46	869	3.48	1.23
	(uW)				
0	1000.0	2.19	775	3.10	1.10
					(mVrms)
-1	794.3	1.95	690	2.76	976
-2	631.0	1.74	615	2.46	870
-3	501.2	1.55	548	2.19	774
-4	398.1	1.38	489	1.96	693
-5	316.2	1.23	436	1.74	615
-6	251.2	1.10	388	1.55	548
		(mVp-p)			
-7	199.5	979	346	1.38	488
-8	158.5	872	308	1.23	435
-9	125.9	777	275	1.10	389
				(mVp-p)	
-10	100.0	693	245	980	347
-12	63.1	550	195	778	275
-14	39.8	437	155	618	219
-16	25.1	347	123	491	174
-18	15.9	276	97.5	390	138
-20	10.0	219	77.4	310	110
-22	6.31	174.0	61.5	246	87.0
-24	3.98	138.2	48.9	196	69.3
-26	2.51	109.8	38.8	155	54.8
-28	1.59	87.2	30.8	123	43.5
-30	1.00	69.3	24.5	98.0	34.7

CHANGE INFORMATION

At Zetron, we continually strive to improve our products by updating hardware components and software as soon as they are developed and tested.

Due to printing and shipping requirements, this manual may include information about the latest changes on the following pages.