ZETRON

Model 452 and Model 459
Trunking Controllers
Installation & Operation Manual

Part No. 025-9450A

Please check for change information at the front of this manual.

Copyright © 1999 by Zetron, Inc.
All Rights Reserved

Contents

1. INTRODUCTION 1-1
KEY FEATURES 1-1
CAPACITIES 1-2
Repeater Loading Statistics 1-2
Air Time Accumulation 1-2
Call Detail Buffer (SMDR) 1-2
MULTIPLE CAPABILITIES 1-2
Shared Channel Arbitrator 1-3
LTR Data Encode/Decode 1-4
Mobile Validator 1-4
Air Time Accumulator 1-4
Access Modem 1-5
Call Detail Buffer 1-5
Interconnect 1-5
ADVANCED FEATURES 1-6
System Management by Computer 1-6
Ghost Repeaters 1-6
Selective Mobile-to-Mobile Calling 1-7
Autonet 1-7
Custom Voice Prompts 1-7
USING THE MANUAL 1-8
Organization of Sections 1-8
Section 2. Specifications 1-8
Section 3. System Operation 1-8
Section 4. Controller Installation 1-8
Section 5. Telco & Cross-Busy Installation 1-8
Section 6. Expanded Installation Information 1-8
Section 7. Interconnect Signaling 1-9
Section 8. Configuration Worksheets 1-9
Text Notational Conventions 1-9
Special Notes to the User 1-9
Note Boxes 1-9
Reference Boxes 1-10
Caution Boxes 1-10
Warning Boxes 1-10
Related Manuals 1-11

Contents
(Continued)

2. PRODUCT SPECIFICATIONS 2-1
PHYSICAL 2-1
Model 452 2-1
Model 459 2-1
POWER SUPPLY 2-1
ENVIRONMENTAL 2-2
RADIO INTERFACE 2-2
AUX INTERFACE 2-2
TELEPHONE INTERFACE (Model 459 only) 2-3
Line Types 2-3

3. SYSTEM OPERATION 3-1
LTR PROTOCOL 3-1
Trunking Control Buses 3-1
Subscriber Bus Operation 3-1
Repeater Bus Operation 3-2
User ID Validation 3-2
Trunking Data Packets 3-2
HARDWARE CONNECTIONS 3-3
System Connections 3-3
Repeater Connections 3-3
CONTROLLER DIAGNOSTIC TOOLS 3-4
Traffic Monitor 3-4
System Alarms 3-4
Front Panel LEDs 3-5
SYSTEM PROGRAMMING 3-6
TCBase Conveniences 3-7
Dynamic Call Limiting 3-7
Intelligent Free Repeater Allocation 3-8
DISPATCH OPERATION (Mobile to Mobile Calling) 3-8
SHARED CHANNEL OPERATION 3-9
Mobile Call Processing 3-10
Landline Call Processing 3-10
BILLING INFORMATION 3-10
Dispatch Airtime 3-10
Interconnect Airtime (Model 459 only) 3-11
Call Detail (SMDR) 3-11

Contents
(*Continued*)

INTERCONNECT FUNCTIONS 3-12
Land Line to Mobile Calling 3-12
Second Overdial 3-13
Mobile to Land Line Calling 3-13
Dialing Restrictions 3-13
Autodialing 3-14
Auto Overdial Users 3-14
Push-to-Connect (PTC) Users 3-14
CONVERSING 3-15
Half-Duplex Calls 3-15
Full-Duplex Calls 3-16
AUDIO COMPANDOR 3-17
VOICE MESSAGING ACCESS USING THE # KEY 3-17
STATION IDENTIFICATION 3-18
OPTIONAL FEATURES 3-18
Custom Voice Prompts 3-18
Dial Click Decoding 3-19

4. CONTROLLER INSTALLATION 4-1
GETTING STARTED 4-1
Preparation 4-1
Installation Equipment 4-1
Power Considerations 4-2
Adjustment Overview 4-3
Installation Checklist 4-4
CONTROLLER TEST MODE 4-4
Accessing Test Mode 4-4
Test Operation 4-4
STEP 1. SETTING THE JUMPERS 4-5
STEP 2. CLEARING MEMORY 4-8
Hard Reset 4-8
Soft Reset 4-9
STEP 3. SETTING DIP SWITCHES 4-9
STEP 4. INSTALLING THE REPEATER 4-11
Controller Adjustments 4-13
Receive Audio Adjustments 4-15
Setting Repeater Interface Levels 4-16
Transmit Audio Adjustment 4-17
STEP 5. CONNECTING TRUNKING CONTROLLERS 4-17
STEP 6. TESTING DISPATCH CALLS 4-18
Single Channel Dispatch 4-18
Dispatch Trunking 4-19

Contents
(*Continued*)

STEP 7. PROGRAMMING SITES, REPEATERS AND USERS 4-20
STEP 8. RECORDING CONFIGURATION DETAILS 4-21
Final Check 4-21

5. TELCO AND CROSS-BUSY INSTALLATION 5-1
TELEPHONE INTERFACE INSTALLATION 5-1
Installation Checklist 5-1
Step 1. Setting the Telco Jumpers 5-2
E&M Card Jumpers 5-3
Step 2. Making Telco Connections 5-4
Step 3. Adjust the Telco Interface 5-6
Hybrid Balance 5-7
From Telco Level 5-7
To Telco Level 5-7
Step 4. Testing Interconnect Calls 5-8
Step 5. Finish Programming 5-8
INTERCONNECT OPTION 5-9
Upgrading a Dispatch Unit 5-9
VOICE PROMPTS OPTION 5-9
Installing the Voice Prompts Card 5-9
Updating TCBase 5-10
Recording Voice Prompts 5-11
Customizable Messages 5-11
Programming Commands 5-12
Progress Tones 5-13
Examples 5-13
Adjusting the Audio Level 5-13
DIAL CLICK OPTION 5-14
Installing the Dial Click Card 5-14
Updating TCBase 5-15
Adjusting the Click Decoder 5-15
REPEATER SHARING OR CROSS-BUSY INSTALLATION 5-15
System Requirements 5-15
Cross-Busy Conditions 5-16
Connecting to a Shared Repeater 5-16
Database Programming 5-17

Contents
(Continued)

6. EXPANDED INSTALLATION INFORMATION 6-1
CONTROLLER ADJUSTMENTS 6-1
Carrier Deviation 6-1
TELCO ADJUSTMENTS 6-2
Hybrid Balance 6-2
From Telco Adjustments 6-3
Dial Tone Method 6-4
DTMF Method 6-4
To Telco Adjustment 6-4
PROGRAMMING USERS 6-4
Repeater Timing 6-5
Keyup Delay 6-5
COR Hold Time 6-5
Repeater Hold Time 6-6
Repeater Timeout 6-6
COR Mute Time 6-6
Packet Loss Time 6-6
FIELD UPDATES 6-6
Identifying PROMs 6-7
Updating TCBase 6-9
Installing New Software 6-9

7. INTERCONNECT SIGNALING 7-1
END-TO-END, LOOP START LINES 7-1
Idle Condition 7-1
Outgoing Call 7-1
Incoming Call 7-1
Call Disconnect 7-1
E&M TYPE I, FOUR-WIRE LINES 7-2
Idle Condition 7-3
Incoming DID Call 7-3
Outgoing Calls 7-4
DIRECT AUTONET 7-5

8. CONFIGURATION WORKSHEETS 8-1
GENERAL SITE CONFIGURATION 8-1
POTENTIOMETER SETTINGS 8-2
End-to-End Card 8-2
DIP SWITCH SETTINGS 8-3
End-to-End Card 8-3
JUMPER SETTINGS 8-4
E&M Card 8-4

WARRANTY

Zetron's warranty is published in the current Zetron *United States Price Book.*

LIMITATION OF LIABILITY

Zetron makes no representation with respect to the contents of this document and/or the contents, performance, and function of any accompanying software and specifically disclaims any warranties, expressed or implied, as to merchantability, fitness for purpose sold, description, or quality.

Further, Zetron reserves the right to revise this document or the accompanying software and to make changes in it from time to time without obligation to notify any person or organization of such revisions or changes.

This document and any accompanying software are provided "as is." Zetron shall not under any circumstances be responsible for any indirect, special, incidental, or consequential damages or losses to the buyer or any third party arising out of or connected with the buyer's purchase and use of Zetron's products or services.

COPYRIGHT

This publication is protected by copyright by Zetron, Inc. and all rights are reserved worldwide. This publication may not, in whole or in part, be copied, photocopied, reproduced, translated, or reduced to any electronic medium or machine-readable form without prior written consent from Zetron, Inc.

The software in this product is protected by copyright by Zetron, Inc. and remains the property of Zetron, Inc. Reproduction, duplication, or disclosure is not permitted without prior written consent of Zetron, Inc.

TRADEMARKS

Zetron is a registered trademark of Zetron, Inc.

All other product names in this document are trademarks or registered trademarks of their respective owners.

FEDERAL COMMUNICATIONS COMMISSION (FCC) REGULATIONS

1. This device complies with Part 68 of the FCC rules. The FCC registration number of this device, the ringer equivalence number, the facility interface code (see ***Table 1***), service order code (9.0Y, AS.3) and the connection jack type (RJ11C), if requested, must be reported to the telephone company. The FCC registration number and the ringer equivalence number may be found on the label attached to the device.

2. The ringer equivalence number (REN) is used to determine the quantity of devices which may be connected to the telephone line. Excessive RENs on the telephone line may result in the devices not ringing in response to an incoming call. The sum of ringer equivalence numbers for all devices connected to a single telephone line should not exceed five (5.0) for reliable operation. To be certain of the number of devices that may be connected to a line, as determined by the total RENs, contact the local telephone company.

Table 1. Facility Interface Codes

Interconnect Option	Facility Interface Code	Ringer Equivalence Number
2-wire End-to-End, Loop-Start	02LS2	0.4B
2-wire End-to-End, Ground-Start	02GS-2	0.0B
4-wire E & M, Loop-Start	04LS2	0.0B
4-wire E & M, Ground-Start	04GS2	0.0B

3. If this device causes harm to the telephone network, the telephone company will notify you in advance that temporary discontinuance of service may be required. If advance notice is not practical, the telephone company will notify you as soon as possible. You will also be advised of your right to file a complaint with the FCC if you believe it is necessary.

4. The telephone company may make changes in its facilities, equipment, operations or procedures that could affect the operation of this equipment. If this happens, the telephone company will provide advance notice in order for you to make necessary modifications to maintain uninterrupted service.

5. This device must not be installed on coin-operated telephone lines or party lines.

6. Repair work on this device must be done by Zetron, Inc. or a Zetron authorized repair station. If this device is causing harm to the telephone network the telephone company may request that you disconnect the equipment until the problem is resolved.

FEDERAL COMMUNICATIONS COMMISSION (FCC) REGULATIONS

This equipment has been tested and found to comply with the limits for a Class A digital device, pursuant to Part 15 of the FCC Rules. These limits are designed to provide reasonable protection against harmful interference when the equipment is operated in a commercial environment. This equipment generates, uses, and can radiate radio frequency energy and, if not installed and used in accordance with the instruction manual, may cause harmful interference to radio communications. Operation of this equipment in a residential area is likely to cause harmful interference in which case the user will be required to correct the interference at his or her own expense.

Changes or modifications not expressly approved by the manager of Zetron's compliance department can void the FCC authorization to operate this equipment.

Repair work on this device must be done by Zetron, Inc. or a Zetron authorized repair station.

INDUSTRY CANADA REGISTRATION

NOTICE: The Industry Canada label identifies certified equipment. This certification means that the equipment meets certain telecommunications network protective, operational and safety requirements as prescribed in the appropriate Terminal Equipment Technical Requirements document(s). The Department does not guarantee the equipment will operate to the user's satisfaction.

Before installing this equipment, users should ensure that it is permissible to be connected to the facilities of the local telecommunications company. The equipment must also be installed using an acceptable method of connection. The customer should be aware that compliance with the above conditions may not prevent degradation of service in some situations.

Repairs to certified equipment should be coordinated by a representative designated by the supplier. Any repairs or alterations made by the user to this equipment, or equipment malfunctions, may give the telecommunications company cause to request the user to disconnect the equipment.

Users should ensure for their own protection that the electrical ground connections of the power utility, telephone lines and internal metallic water pipe system, if present, are connected together. This precaution may be particularly important in rural areas.

CAUTION: Users should not attempt to make such connections themselves, but should contact the appropriate electric inspection authority, or electrician, as appropriate.

NOTICE: The **Ringer Equivalence Number** (REN) assigned to each terminal device provides an indication of the maximum number of terminals allowed to be connected to a telephone interface. The termination on an interface may consist of any combination of devices subject only to the requirement that the sum of the Ringer Equivalence Numbers of all the devices does not exceed 5.

CANADIAN EMC COMPLIANCE NOTICE

This Class A digital apparatus meets all requirements of the Canadian Interference-Causing Equipment Regulations.

AVIS CANADIEN

Cet appareil numérique de la classe A respecte toutes les exigences du Règlement sur le matériel brouilleur du Canada.

INSTALLATION NOTES

Installation of this equipment should be accomplished by personnel with experience in radio trunking systems. Specialized knowledge in telephone systems is also important to ensure a smooth interface when connecting with the Telco network.

Caution:

This equipment generates, uses, and can radiate radio frequency energy; and if not installed and used in accordance with the instruction manual, may cause interference to radio communications.

Product Changes

Zetron makes improvements to its products on a regular basis. Each circuit card in the product is marked with a hardware revision letter and if it has software, a version number. When you call Zetron for installation or service assistance, they may ask you for the revision and version of your equipment.

The main circuit card in the Model 459 is marked 702-9997x, where "x" is the hardware revision letter, such as A. It is marked 702-9996x in the Model 452. These boards are labeled near the middle of the card, at the right end of the Model 459 (as viewed from front). The label is located under the option board if it is installed in your unit. The main operating software is stored in chips U25 and U26, marked with a version number v.vv, such as 1.00. The tone generator software is stored in chip U15 with a version number such as 1.3. The LTR protocol software is in ASIC chip U16 with a version number such as 1.0. Other option cards such as telephone interfaces, Voice Prompt, etc. are similarly marked.

1. INTRODUCTION 1-1

KEY FEATURES 1-1
CAPACITIES 1-2
Repeater Loading Statistics 1-2
Air Time Accumulation 1-2
Call Detail Buffer (SMDR) 1-2
MULTIPLE CAPABILITIES 1-2
Shared Channel Arbitrator 1-3
LTR Data Encode/Decode 1-4
Mobile Validator 1-4
Air Time Accumulator 1-4
Access Modem 1-5
Call Detail Buffer 1-5
Interconnect 1-5
ADVANCED FEATURES 1-6
System Management by Computer 1-6
Ghost Repeaters 1-6
Selective Mobile-to-Mobile Calling 1-7
Autonet 1-7
Custom Voice Prompts 1-7
USING THE MANUAL 1-8
Organization of Sections 1-8
Section 2. Specifications 1-8
Section 3. System Operation 1-8
Section 4. Controller Installation 1-8
Section 5. Telco & Cross-Busy Installation 1-8
Section 6. Expanded Installation Information 1-8
Section 7. Interconnect Signaling 1-9
Section 8. Configuration Worksheets 1-9
Text Notational Conventions 1-9
Special Notes to the User 1-9
Note Boxes 1-9
Reference Boxes 1-10
Caution Boxes 1-10
Warning Boxes 1-10
Related Manuals 1-11

1. INTRODUCTION

KEY FEATURES

The Zetron Model 452 Dispatch Trunking Controller and Model 459 Interconnect Trunking Controller, designed specifically for bands below 800 MHz, are cost-effective, full-featured LTR repeater controllers incorporating support for shared, conventional channel operation on the same repeater.

Here are just a few of the major benefits of Model 452 and Model 459 controllers:

- Shared Channel Support
- Adjustable LTR Data controls to handle both wide (25 kHz) and narrow (12.5 kHz) band channel spacing.
- Simple programming and billing access of multiple sites from a central computer
- Airtime logging for prime and non-prime time.
- Ghost Repeater IDs which double the number of LTR IDs available per channel up to 10 channels.
- Easier to get an interconnect when one is free
- High priority users get preferential interconnect access
- Reduced system congestion with load sensitive call limiting
- Individual mobile calling privileges
- No extra phone lines are needed for billing access
- Expandability into networking

CAPACITIES

The Model 452 and Model 459 comply with the standard E.F. Johnson LTR trunking protocol and support:

- 1 to 20 RF channels per system
- 250 user IDs per channel (500 with ghosts enabled)
- 5000 user IDs per system

Repeater Loading Statistics

- Previous 24-hour period
- Today's data from midnight to current time
- Occurrences when all repeaters and all interconnects are busy simultaneously (i.e. system busy).

Air Time Accumulation

For Model 452 and Model 459 home-channel users:

- 500 accumulators (prime and non-prime time per User ID) to count 0 to 16,777,216 (194 days)
- 500 hit counters (prime and non-prime time per User ID) to count 0 to 65,536

Call Detail Buffer (SMDR)

- 6000 call records in *each* Model 459 - more controllers means more storage
- Calls which are shorter than the "Minimum Call Time to Store" setting of the TCBase configuration program are not stored.

MULTIPLE CAPABILITIES

The Model 452 or Model 459 installs in a radio repeater rack and fully manages the operation of one channel of a trunked radio system. A Zetron controller can turn any DPL capable repeater into a fully functional LTR channel.

Each Model 452 performs multiple functions: LTR Data Encode and Decode, Unit Validation, Air Time Accumulation, and Shared Channel Arbitration. Model 459s perform all the functions of the Model 452 plus Interconnect, Call Detail Record Storage, and Remote Database programming through an internal modem. Figure 1-1 illustrates the unique capabilities of the controller.

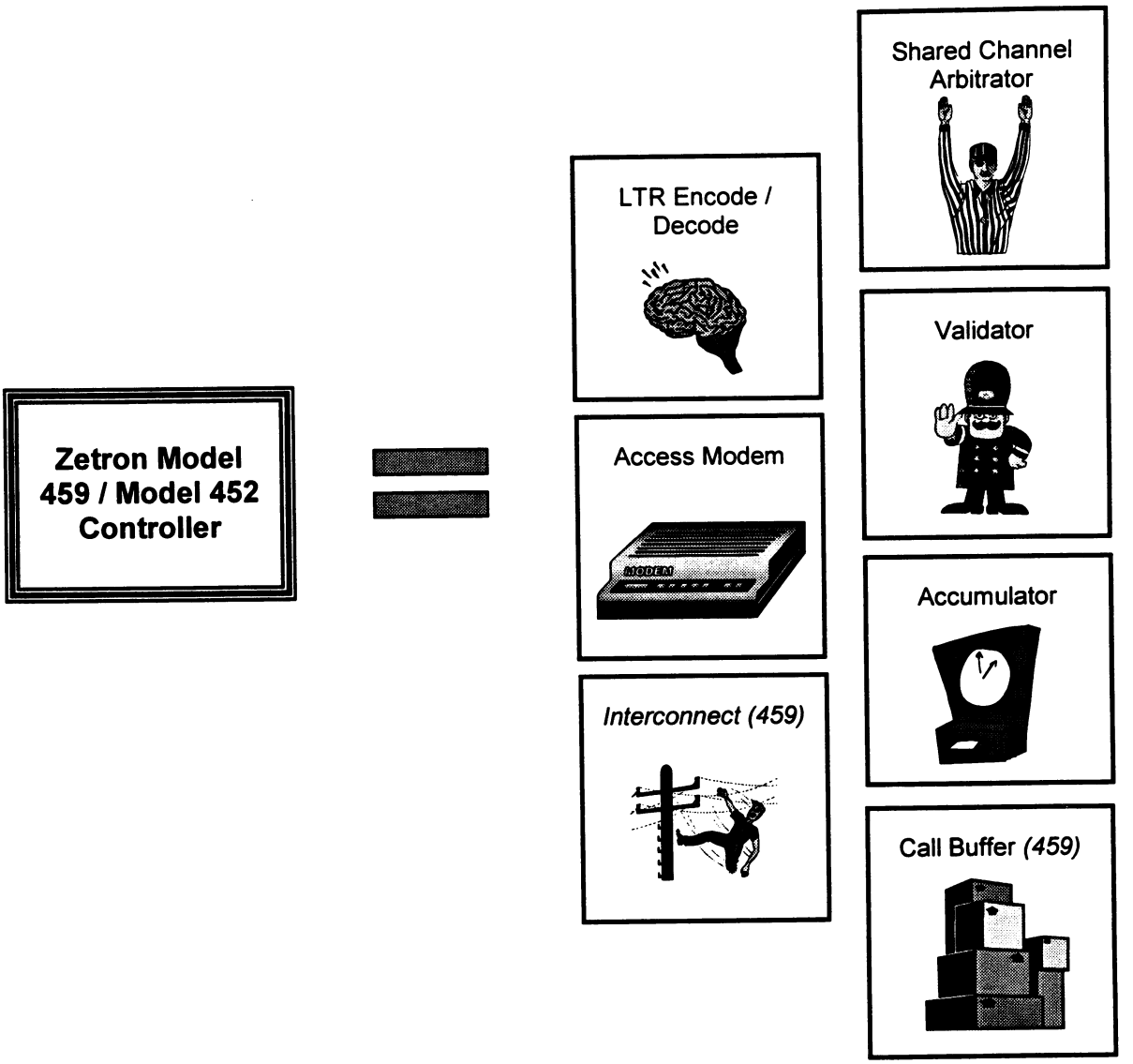

Figure 1-1. Integrated Functions of the Model 452 and Model 459

Shared Channel Arbitrator

The Model 452 and Model 459 have a built-in cross busy function enabling them to share a repeater with a conventional repeater controller and to share the radio channel with other conventional users. There are three conditions which can cause the controller to go into the cross busy state, they are: a request to transmit from the connected conventional controller, COR without valid LTR data, and a busy condition on the TX frequency monitor input. When in the cross-busy state, the Model 452 or 459 ignores any incoming LTR data and does not transmit any LTR data over the channel.

LTR Data Encode/Decode

The Model 452 and Model 459 decode and encode the trunking data from and to mobiles or portables, route receive audio to transmit repeat audio, limit mobile conversation lengths, and allocate radio channel access on a multi-channel trunking system.

Mobile Validator

The built-in validator permits or prevents access from mobile users with designated dispatch and interconnect IDs. User IDs can be validated or invalidated by PC, without visiting the site.

A Zetron proprietary feature provides automatic validation based upon the time of the day. Two time-of-day periods can be specified as prime time. Individual user IDs can be marked as Deferred and have access to the system only during non-prime time. This allows you to provide after hours service which increases system loading without sacrificing system availability during peak periods.

> ☞ **Note:**
>
> **The 452 and 459 controllers consider Saturday and Sunday to be non-prime time.**

Air Time Accumulator

Totals of air time used on a per user ID basis are accumulated within each controller for its home channel users. This standard feature tracks usage in seconds per ID for two time-of-day periods; prime time and non-prime time. It even keeps track of all attempts at system access by invalid user IDs for that home channel.

With a prime time premium billing rate in your invoicing system, you can encourage off hours business and smooth out peak usage. The air time accumulator is equipped with enough memory to keep track of 194 *days* of air time used per ID.

Regardless of which channel is used by a particular mobile user ID, its home channel controller accumulates its air time usage total. You retrieve the air time totals from the site with your PC office computer via telephone modem.

The air time for dispatch IDs is kept accurate to the nearest second since LTR dispatches are short fragments of conversations. Interconnect calls, however are message trunked, using the channel for the duration of the conversation. If desired, the air time of each interconnect call will be rounded up to the next minute whenever a mobile uses 0.1 (6 seconds) of the next minute (same method used by telephone companies).

Access Modem

A built-in 1200 bps modem is part of every Model 459 Interconnect Trunking Controller. You do not need a separate telephone line for modem access; any Model 459 interconnected channel doubles as a modem.

If you want to keep all of your telephone lines available for interconnect, or if you are operating only dispatch (no interconnect), or if 1200 bps is not fast enough, you can attach an external modem with its own end-to-end telephone line to any Model 459 or Model 452 front panel RS-232 port. Configuration switches on the unit select the preferred modem data rate of 300, 1200, 2400, or 9600 bps.

Call Detail Buffer

The SMDR (station message detail record) buffer is used to record each telephone call placed through a Model 459. The buffer can hold 6000 call records. Each record contains the mobile ID, date and time of call, number dialed, and call length.

You retrieve the call detail records from the site with your PC office computer via telephone modem or by directly connecting with an RS232 serial cable to a unit at the site. The records are transmitted in a compact binary format to save telephone transmission time, and converted to universal ASCII codes within the PC computer. Since the Model 459 keeps accurate call length totals, you can bill to the nearest second of actual usage. If you allow "free calls under so many minutes", you can tell the Model 459 not to store these calls and save SMDR buffer space.

Interconnect

Interconnect capability of the Model 459, provides telephone line or microwave radio connection to the radio channel for conversations between land line parties and mobile subscribers. A choice of telephone interface (end-to-end or E&M) adapts the controller to your preferred interconnect arrangement.

Zetron's special interconnect features give you a high capability mobile telephone system at an economical price. If a land side caller, through a Model 459, tries to reach a mobile that is already making an interconnect call *on any channel*, the controller gives the land side caller a busy signal.

Dynamic interconnect call limits control the length of each telephone call based upon actual measured system load. Dispatch throughput no longer has to suffer at the expense of interconnect calls. You select call length, and number of active interconnect calls for five loading levels of four classes of customers; low, medium, high and very high.

Intelligent free channel allocation improves system access at sites with a mixture of dispatch-only and interconnect channels. When a dispatch Model 452 becomes busy, it designates another dispatch channel as the next free one, not just any adjacent channel. This keeps interconnect channels free until all of your dispatch channels are full. Mobiles have a better chance of making a call on the first attempt, saving them frustration, and saving you air time.

Two mobile answer time limits also save air time. You can program long horn honk times, and short times for normal mobile customers.

Interconnect Compandor audio processing is included which improves the audio quality of interconnect calls. Noise introduced by the mobile to land line RF path is reduced to the point that mobile radio calls sound as good as regular land-to-land telephone calls.

ADVANCED FEATURES

Several features available for the Model 452 and 459 Trunking controllers simplify operation and management of the LTR system. Some of the most useful features are described below.

System Management by Computer

Programming of the system's mobile user database is performed with a PC compatible office computer running Zetron's TCBase software system. This software keeps track of Zetron controllers on multiple channels at multiple sites. The settings are programmed "off-line" on computer disk and loaded into the controllers with a telephone call via the computer's modem.

In like manner, billing data and repeater loading information are retrieved from the channel controllers for processing in the office computer. Since the modem links are used only during actual data transfers, not during clerical "thinking" time, telephone charges are kept to a minimum.

Repeater loading histograms and a real-time site monitor display are also standard features of the Model 452 and Model 459 controllers.

> ☞ **Note:**
>
> **Only one telephone call to the site is required to retrieve data from all of your Model 452s and Model 459s. Zetron's proprietary subscriber bus allows one controller to access all the others at the radio site.**

Ghost Repeaters

Ghost repeaters is a unique feature of Zetron LTR controllers. A ghost repeater is a transparent repeater number that actually homes to another physical repeater. This allows one repeater to home 500 standard LTR users instead of only 250.

> ☞ **Note:**
>
> **All brands of mobile radios may not be compatible with this feature.**

Selective Mobile-to-Mobile Calling

The Model 459 provides a software feature that allows two half-duplex interconnect mobiles to converse using only one channel. In previous applications one interconnect had to place a phone call to the other, busying up two interconnect phone lines (one outgoing, one incoming) and two repeater channels. Selective mobile-to-mobile calls increase channel efficiency and reduce telephone billing costs.

A selective mobile-to-mobile call is initiated by keying up on a half-duplex interconnect mobile and dialing *9* plus the LTR ID code or access number of the mobile being called.

Autonet

Autonet is the Model 459's automatic overdialing feature. If a user is programmed for autonet or push-to-connect (PTC), when the mobile keys up, the controller automatically connects to another LTR site and overdials an access or ID code.

Custom Voice Prompts

When a voice prompt card is installed in the Model 459, up to 11 custom voice prompts are available for the repeater. Voice prompts create a more user-friendly environment for callers and aid in troubleshooting the system.

USING THE MANUAL

Understanding what the manual is saying helps you install, program, and troubleshoot your system faster and easier. This section introduces you to the way things are presented, so that we can "speak the same language." The following subsections describe how things are identified throughout the manual, and where to find what you are looking for quickly and easily.

Organization of Sections

The manual is split into several sections so the you can find the exact information you need and any related topics. The sections are organized as follows:

Section 2. Specifications

This section provides all of the detailed technical specifications of the Model 452 and 459. It encapsulates the design functionality of the products.

Section 3. System Operation

This section offers valuable reference and operational theory information. It provides a description of the LTR trunking protocol and an overview of typical system connections. Section 3 also includes descriptions of the front panel LEDs, calling types, billing data, and optional features.

Section 4. Controller Installation

This section provides step-by-step procedures to successfully install the Model 452 and 459. It includes reference information such as connector ports, cable configuration, and illustrations of the different hardware aspects of the unit. Section 4 also provides specific programming information required to initiate communications on the newly installed system.

Section 5. Telco & Cross-Busy Installation

This section provides step-by-step install procedures specific to Model 459 telephone interface. In addition, Section 5 describes the detailed connections for cross-busy and shared channel applications. Optional feature installation and adjustments are included.

Section 6. Expanded Installation Information

This section provides enhanced installation procedures and adjustments. Use this section as reference whenever additional details cannot be found in Section 4. Most installations will not require the expanded information, but it is included for specialized applications. This section also covers field upgrades.

Section 7. Interconnect Signaling

This section describes the details of interconnect communications (*Model 459 only*). This includes call initiation and termination information, timing, and interface with the central office. Section 7 also describes the Autonet link feature between remote Model 459s.

Section 8. Configuration Worksheets

This section provides worksheets for documenting your system. When filled-in, the worksheets are a handy reference and can prevent hours of frustration.

Text Notational Conventions

Notational conventions are the manual text styles that identify specific types of words. For instance, it is important to know which words refer to filenames, operator commands, screen quotes, manual titles, etc. The conventions help you understand what is being said. Table 1-1 summarizes the text styles used in this manual.

Table 1-1. Text Notational Styles

Sample Notation	What it Means
<aaaa>	Text inside arrow brackets < > identifies a keyboard entry. (Do not include the < > in your entry.) Ex. <Tab> means press the "Tab" key
Aaaa *-or-* AAAA	Text that is Initial Capitalized (or all caps) within a sentence refers to a database or menu field. A vertical line (|) separates the menu and its option. Ex. Choose the COMM | STATUS INFO menu item.
aaaa	Text in *italics* identifies a Zetron manual title.
'aaaa'	Text in 'single quotes' is exactly what appears on the computer screen.

Special Notes to the User

Throughout the manual, special text boxes are used to capture the reader's attention. These boxes ensure that critical information is not overlooked. Each box includes a key word and an icon to identify the type and gravity of the information it provides. The special notes are summarized in the following text.

Note Boxes

A note box is labeled with a pointing hand symbol (☞) and the word "Note" at the top. These boxes let the user know that something important, but of relatively low priority is being said. A note box does not identify any danger to the user or the system, but rather something that simply should not be overlooked. For example:

Note:

If you prefer fixed call limits, put the same value in each entry of the Dynamic Call tables.

Reference Boxes

A reference box is labeled with an alternate publication symbol (📖) and the word "Note" at the top. These boxes let the user know that further detailed information is available somewhere else. Sometimes the reference is to another section of this manual or to another document entirely. For example:

Note:

Refer to Section 3 for further details on the operation of the front panel LEDs.

Caution Boxes

A caution box is labeled with an open stop hand symbol and the word "Caution" at the top. These boxes are more serious and are intended to prevent the user from causing possible damage to the equipment. For example:

Caution:

ICs are delicate and sensitive to static. When handling them, be sure to remain grounded by maintaining contact with the chassis sheet metal. Only remove the ICs from the static protective shipping material when read for installation.

Warning Boxes

A warning box is labeled with a skull and cross-bones symbol (☠) and the word "Warning" at the top. These boxes are of the highest importance and are intended to prevent possible injury to the user. Warning boxes should never be ignored. If any questions arise, call Zetron before proceeding. For example:

Warning:

Always power-down and unplug electrical equipment before performing any repair procedures.

Related Manuals

Two different manuals describe the Zetron Model 452/459 system. Both manuals can stand alone, but cannot cover all of the information necessary to install, configure, and maintain an efficient system. In addition, since a FASTNet Switch can be interfaced with the controllers, the manuals for that equipment are good references.

Each of the manuals listed in Table 1-2 is designed to be used in conjunction with one or more of the other documents. The shaded row identifies this manual. Depending on the system application, you may have up to five different documents.

Table 1-2. Model 452 & 459 and Model 2540 Manuals

Manual Title	Part No.	Description
Model 452 & 459 Trunking Controllers Installation & Operation	025-9450	Presents an overview of the Model 452 and 459 Trunking Controller hardware and theory of operation. Describes procedures for installing, adjusting, and maintaining the unit.
Model 452 & 459 TCBase Operation	025-9451	Presents installation, setup, and management of the user database program, TCBase. Also describes billing file storage and management of some standard and optional features.
Model 2540 FASTNet Switch Operation & Programming	025-9270	Presents an overview of the features of the Model 2540 and explains how to program using Fastbase, database management software. Information regarding the Trunk Card Editor is also provided in order to properly configure the input and output trunk ports of the Model 2540.
Model 2540 FASTNet Switch Installation & Maintenance	026-9260	Presents step-by-step installation instructions with adjustment and troubleshooting procedures. Also includes product specifications and theory of operation.
Model 2540 FASTNet Switch Schematics	025-9266	Presents the parts list, schematic drawings, and silkscreens for the Model 2540.

Zetron recommends storing the manuals in a convenient location. For instance, the operation and installation manuals should be located with the equipment (at the site) and the database manuals should be near the office computer, depending on where they get the most use. In addition, when contacting Zetron for technical support, it is helpful if the appropriate manual(s) are handy for quick reference.

2. PRODUCT SPECIFICATIONS 2-1

PHYSICAL 2-1
Model 452 2-1
Model 459 2-1
POWER SUPPLY 2-1
ENVIRONMENTAL 2-2
RADIO INTERFACE 2-2
AUX INTERFACE 2-2
TELEPHONE INTERFACE (Model 459 only) 2-3
Line Types 2-3

2. PRODUCT SPECIFICATIONS

PHYSICAL

Mounts: Both units are configured for standard 19" rack install.

Model 452

Height: 1.75 inches

Width: 19 inches

Depth: 6.95 inches

Weight: 3.5 lbs (US)

Model 459

Height: 3.5 inches

Width: 19 inches

Depth: 6.95 inches

Weight: 4.8 lbs (US)

POWER SUPPLY

DC Input: +10 to +16 V_{DC}, pin 1 to pin 3

DC Power

Model 452: 4.5 W_{DC} @ 16 V_{DC} input

Model 459: 5.7 W_{DC} @ 16 V_{DC} input (*all options installed*)

These controllers can be powered by applying AC power to pins 1 and 2 and using the internal full wave rectifier to create the DC voltage used by the unit. Note that when AC is used to power the unit, the internal DC voltage is not connected to the Aux Interface connector. See Figure 4-1.

AC Voltage

Model 452: 9.5 to 13.8 V_{AC} (60 Hz)

Model 459: 9.8 to 14 V_{AC} (60 Hz)

ENVIRONMENTAL

Operating temperature:	+32° to +140° F 0° to 70° C
Humidity:	5% to 90% relative, non-condensing

RADIO INTERFACE

Connector:	15-pin Weidmüller
Signals:	AC/DC power input PTT output (transistor open collector) Transmit Frequency monitor input COR (Carrier Operated Relay) input Transmit audio output SubOut (transmit LTR data) Discriminator input (receive audio)
Rx audio input:	100 mV_{p-p} - 10 V_{p-p} Two selectable ranges
Rx audio impedance:	Z_{in} = 50 kΩ minimum
Tx audio output:	0 to 4 V_{p-p} Two selectable ranges
SubOut level:	0 to 1.2 V_{p-p} Two selectable ranges
SubOut impedance:	Z_{out} = 1 kΩ AC or DC coupled Jumper selectable
PTT output:	Transistor type - open collector

AUX INTERFACE

Connector:	10-pin Molex
Signals:	Power output (see Figure 4-1) Discriminator output Transmit audio input PTT input Busy indication (transistor open collector) COR output Sub audio input

TELEPHONE INTERFACE (Model 459 only)

Connector: RJ11

Line Types

End-to-end: Loop *or* ground start

Type I E&M 4-wire: Two-way DID/DOD interface
Wink *or* immediate start
2 to 4 feed digits
DTMF, or dial pulse digit decoding

3. SYSTEM OPERATION 3-1

LTR PROTOCOL 3-1
Trunking Control Buses 3-1
Subscriber Bus Operation 3-1
Repeater Bus Operation 3-2
User ID Validation 3-2
Trunking Data Packets 3-2
HARDWARE CONNECTIONS 3-3
System Connections 3-3
Repeater Connections 3-3
CONTROLLER DIAGNOSTIC TOOLS 3-4
Traffic Monitor 3-4
System Alarms 3-4
Front Panel LEDs 3-5
SYSTEM PROGRAMMING 3-6
TCBase Conveniences 3-7
Dynamic Call Limiting 3-7
Intelligent Free Repeater Allocation 3-8
DISPATCH OPERATION (Mobile to Mobile Calling) 3-8
SHARED CHANNEL OPERATION 3-9
Mobile Call Processing 3-10
Landline Call Processing 3-10
BILLING INFORMATION 3-10
Dispatch Airtime 3-10
Interconnect Airtime (Model 459 only) 3-11
Call Detail (SMDR) 3-11
INTERCONNECT FUNCTIONS 3-12
Land Line to Mobile Calling 3-12
Second Overdial 3-13
Mobile to Land Line Calling 3-13
Dialing Restrictions 3-13
Autodialing 3-14
Auto Overdial Users 3-14
Push-to-Connect (PTC) Users 3-14
CONVERSING 3-15
Half-Duplex Calls 3-15
Full-Duplex Calls 3-16
AUDIO COMPANDOR 3-17
VOICE MESSAGING ACCESS USING THE # KEY 3-17
STATION IDENTIFICATION 3-18
OPTIONAL FEATURES 3-18
Custom Voice Prompts 3-18
Dial Click Decoding 3-19

3. SYSTEM OPERATION

LTR PROTOCOL

The Models 452 and 459 encode and decode the LTR subaudible control information that is used to control LTR mobiles and portables and cause them to function together as an efficient trunking system based on the LTR protocol pioneered by E.F. Johnson.

Simple Tx Data and Rx Data level adjustments on the front panel set the RF channel deviation levels recommended for the subaudible data. The DECODE LED on the front panel is ON whenever the controller is receiving valid LTR data packets. The Zetron controllers are responsible for keeping the LTR data packets flowing smoothly from/to the mobile radios to maintain channel efficiency.

Trunking Control Buses

Each Model 452 and 459 in a system communicates with each other through two RS-485 control buses. One RJ-45 cable contains the required signals for both buses.

Multi-channel repeater channel allocation is performed using the high-speed repeater bus. Each repeater controller (numbered 1 through 20) has a designated time slot on the bus, during which it indicates the currently active user on its repeater. The other controllers use this information to determine available free channels and to send "go to" commands to gather groups of mobiles.

The subscriber bus is used for communicating database and billing information from one controller to another. When the office computer connects into one Model 459 by modem or serial port, or to one Model 452 by serial port, it can send and receive data from any controller via the subscriber bus.

There is a pair of RJ-45 8-pin connectors on the rear of each unit for the control buses, making it easy to daisy-chain the cables. These party-line buses connect controllers together with twisted pairs located within the control cable supplied with each controller.

Subscriber Bus Operation

This bus provides access to database and billing data of all controllers from any one unit. The messages carry database information for automatic cloning, air time and detail records for billing data retrieval, and repeater loading data for system use analysis.

The bus is a party-line system where one unit is a "subscriber master" (this is the same unit which has been designated as the sync master on the repeater bus) and the others slaves. When the master talks to the slaves, its front panel POLL light is lit steadily and the slave POLL lights flicker quickly. During database cloning, the POLL light flashes every second or so until cloning is complete.

Repeater Bus Operation

This bus has a time slot for each active repeater on the system to identify which user (home channel + ID) is using that repeater. If the repeater is available (free), then the home channel number (01 to 20) and ID of 255 appears on the bus. One logic unit is designated the bus master and provides the sync pulse necessary for bus operation. If the sync master fails to generate sync pulses at the appropriate time, then the repeater controllers do not trunk, but revert to single channel LTR radio repeaters. As soon as sync reappears, trunking resumes automatically.

User ID Validation

On LTR systems with Zetron Model 452s and 459s, only user Ids which have been designated as valid are permitted system access. If an invalidated user ID attempts access, the controller for that channel sends a "turn-off" message to the mobile, causing the mobile radio to squelch. If the mobile is half-duplex, it will not hear the "turn-off" packet until it stops transmitting.

As a programming convenience, the Model 452 and 459 controllers can be setup to treat all unassigned user IDs as either valid or invalid. As a result, a much smaller number of users need to be programmed. For example, if unassigned users are set to invalid by default, only those users that need service must be programmed. All others can be left as is, and yet be unusable to fraudulent callers.

Trunking Data Packets

A mobile radio is normally tuned to its "home" channel, listening for data packets from its home repeater. These data packets tell the radios which repeater is available for use and whether any mobile or telephone party is calling them. The serial format of these data packets is illustrated in Figure 3-1.

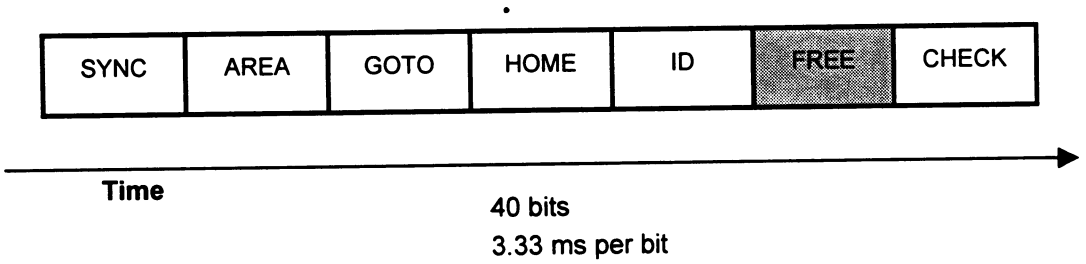

Figure 3-1. LTR Data Packet Format

If all channels are busy, then a "Free" repeater number of 0 is sent by the controller. If the home repeater is free, the logic unit sets "Go To=Home" and sends idle packets at regular intervals to keep mobiles updated, typically every 10 seconds.

The "Check" field guarantees accurate communication of data between the logic units and the mobiles. Erroneous packets are discarded.

HARDWARE CONNECTIONS

System Connections

Figure 3-2 shows the architecture of a typical trunked radio system. Note that the radio controllers (Model 452s and Model 459s) communicate with each other via a control bus which has two independent RS-485 serial links. The first link, the Repeater bus, is used to allocate repeater channel use. The second RS-485 serial link, the Subscriber bus, is used by the controllers for database and billing information transmission. With this bus, an RS-232 serial connection to any unit or one phone call to any controller can update the database and retrieve billing data for the entire Model 452/459 site.

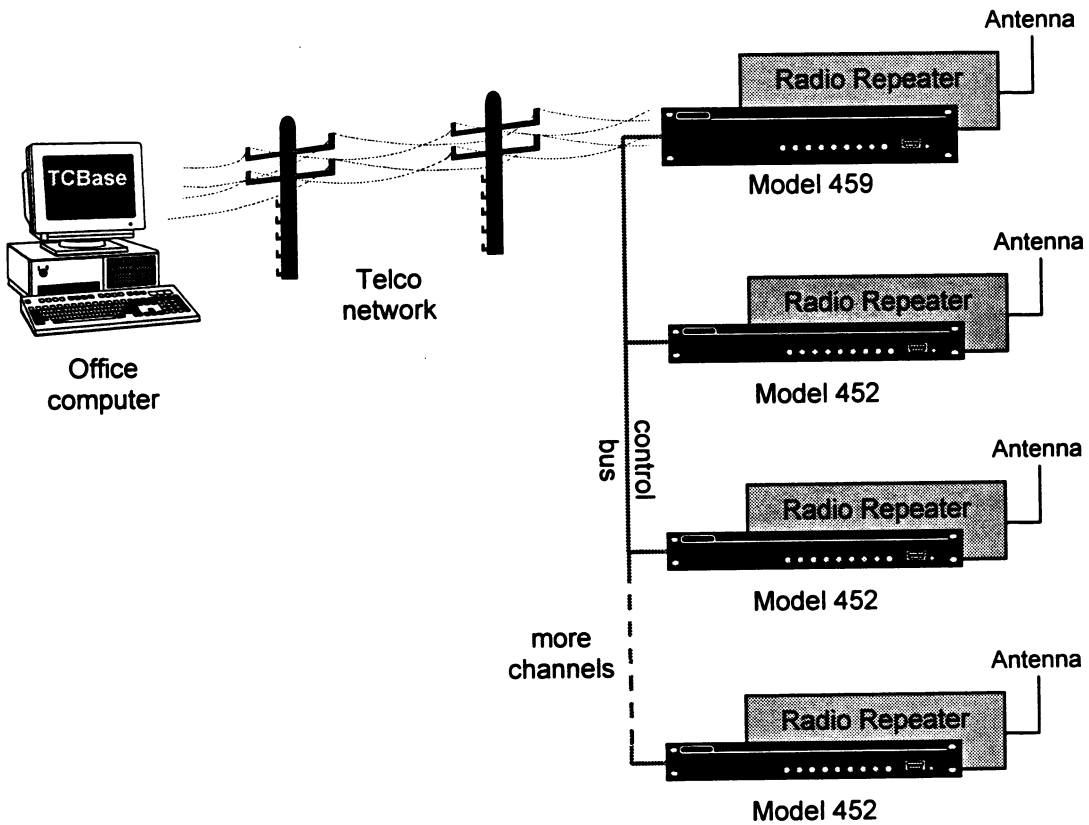

Figure 3-2. System Block Diagram

Repeater Connections

As shown in Figure 3-3, each radio channel consists of a channel controller and a radio repeater. Typical connections between the Controller and the repeater consist of discriminator audio, transmit audio/data, PTT, and power/ground.

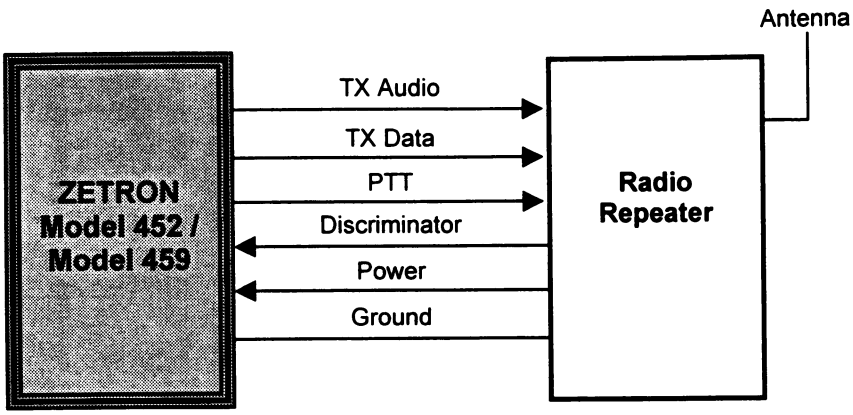

Figure 3-3. Model 452/459 to Repeater Connections

CONTROLLER DIAGNOSTIC TOOLS

Traffic Monitor

The traffic monitor feature of the Model 459 and Model 452 Controllers displays, on your computer screen, the activity for each repeater channel at the selected site. You use TCBase to connect to the Model 459 at the remote site through the interconnect line. For further explanation, refer to the TCBase operation manual (Part No. 025-9451).

System Alarms

The alarm feature provides the capability in each Model 452 and Model 459 Controller to monitor for loss of Sync and SMDR storage nearly full. Each of the possible alarms can be individually enabled using Zetron's TCBase software.

Once one of the alarm conditions has been met a tone or voice prompt will be transmitted to the ID code entered in TCBase as the alarm ID. The alarm message can be programmed to be retransmitted up to 999 times with a selectable time interval between each transmission. The alarm condition will also blink the STATUS LED on the Controller front panel.

Note:

If a unit loses sync, it will not be polled on the subscriber bus since it will not be seen on the repeater bus by the Master unit. If a unit has been polled on the subscriber bus and then polling stops for more then 1 minute, the unit will reset in an attempt to recover from a possible data bus error. This reset will affect the timing on the alarm messages if they have been enabled. After resetting, if sync is not seen for 30 seconds the loss of sync alarm will re-occur, but the unit will not reset since it has never been polled on the subscriber bus.

Front Panel LEDs

The front panel of the Model 452 and Model 459 house several LEDs. These lights communicate details about the operation of the controller. Understanding how to interpret LED activity is critical when attempting to troubleshoot potential problems with the system.

Table 3-1 describes each of the LEDs on the front panel of the Model 452 and 459. Note that the lights pertaining to interconnect functions (shaded rows) do not exist on the Model 452.

Table 3-1. Summary of LED Operation

LED	Color	452	Description
TELCO	red	*no*	illuminates when interconnect card is active
DTMF	red	*no*	blinks when a DTMF digit is received from the mobile or telephone party lights solid when the internal modem is in use
CARRIER	red	yes	illuminates when the controller detects RF carrier from the repeater
DECODE	red	yes	illuminates when the controller detects valid LTR data from the repeater
TRANSMIT	red	yes	illuminates when the controller activates PTT to key the repeater
STATUS	red	yes	illuminates when the controller is in the cross busy state and no alarm condition has been detected blinks at a 1 second rate when an alarm condition has been detected blinks at a 200ms rate when the controller is in the cross busy state and an alarm condition has been detected
POLL	red	yes	illuminates when polling is active on the subscriber bus: • lights solid on master unit • blinks on slave units blinks briefly (about once per second) during database cloning
SYNC	red	yes	illuminates when sync is active on the repeater bus • master unit lights when generating sync • slave units light when receiving sync
POWER	green	yes	illuminates when the controller sees 12V power

SYSTEM PROGRAMMING

Many operational settings for the mobile users are programmable on a per user basis. These settings are stored in non-volatile memory in each Model 452 and Model 459 Controller, which is kept intact even during power failures. Programming of these settings is performed with Zetron's TCBase software on an IBM compatible personal computer and loaded into any controller in the system.

If the controllers are at the site, the programming can be loaded by telephone modem or RS-232 data circuit transported via microwave or other medium. If the controllers are in the shop, the programming is loaded locally via an RS-232 port and a Zetron serial cable (for a 9-pin AT communications port, use Zetron cable Part No. 709-7144; for a 25-pin PC communications port, use Zetron cable Part No. 709-9030).

The general configuration for remote programming is illustrated in Figure 3-4.

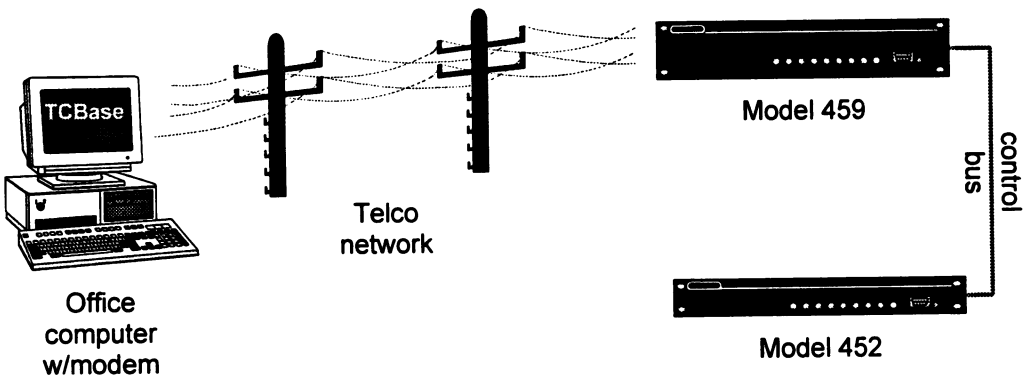

Figure 3-4. Remote Communications Setup

The general configuration for local programming is illustrated in Figure 3-5.

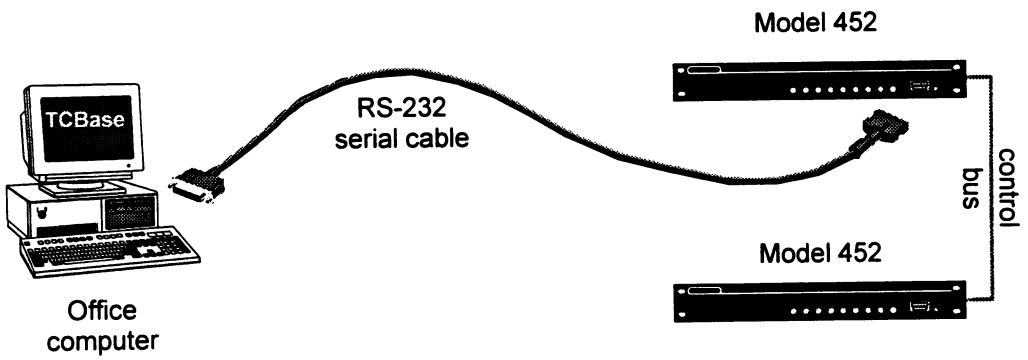

Figure 3-5. Local Communications Setup

TCBase Conveniences

You can handle multiple controllers at multiple sites with one TCBase software system. Programming settings and retrieving billing data is performed right from your office. With Zetron's automatic cloning, one telephone call to any Model 459 at the site automatically loads all of the Zetron units without extra telephone calls.

TCBase is easy for clerical personnel to learn and use. Arrow keys permit navigation on the screen to select menu items and to fill in forms. Help screens give specific instructions, examples, and hints for each operation. Refer to the Zetron TCBase operation manual (Part No. 025-9451) for more information.

Dynamic Call Limiting

The time limit of each interconnect call and number of active calls can be regulated automatically by the Model 459, based upon measured system activity. During busy system periods, you can 1) maintain a specific grade of service for your interconnect users by cutting back on call lengths and 2) give preferred system availability to dispatch users by cutting back on the number of allowed interconnect calls. In this way, you can maintain loading requirements and still provide excellent interconnect availability during non-peak periods.

The system loading (0 to 100%) is determined based upon the number of channels and total air time used during a 5-minute period. Every 30 seconds a new loading value is calculated and the `maximum call length' and `simultaneous calls allowed' values are updated. Active interconnect users are continuously being checked to make sure the maximum call length has not been exceeded. If an interconnect user has been on too long, then that user is given a warning and 30 seconds to complete his/her phone call. The maximum simultaneous calls are checked only when a call is initiated.

TCBase gives you the facility to program interconnect call limits and number of concurrent calls for each loading point in 20% steps. Four classes of user are available; low, medium, high, and very high.

You can also give individual User IDs premium service. Those high priority IDs can obtain more interconnect channels during peak periods when you program the maximum simultaneous calls in the Dynamic Call Limit Table. During the busiest time periods, you can even deny interconnect access to low priority users by setting their number of calls to 0.

Note:

If you prefer fixed (non-dynamic) time limits, put the same value in each entry of the Dynamic Call tables.

Intelligent Free Repeater Allocation

Many LTR systems have rigid repeater system setups in which you must install interconnects in consecutively numbered repeaters for best results. The Model 459 and Model 452 Trunking Controllers allow complete flexibility in numbering your interconnect and dispatch repeaters.

On systems with two or three interconnected channels, all interconnect users are usually "home channeled" on the lowest numbered repeater. This lets users be trunked up to the other interconnected repeaters if their home channel is busy. The problem with most LTR systems is that interconnect users homed on upper channels have difficulty obtaining a free repeater for mobile to land line calls.

The Model 452 and 459's Intelligent Repeater Channel allocation designates the next free repeater based on trunking information programmed for each repeater. Channels can be set up so that the next free repeater is based upon whether the home channel is dispatch-only or interconnect capable. Mobiles homed on interconnect channels will be trunked to interconnected channels first, before ending up on a dispatch channel. Similarly, mobiles homed on dispatch channels will be trunked to other dispatch channels first, keeping the interconnected ones free as long as possible. Your mobile users will be able to make interconnect calls more easily, improving your system's grade of service.

The default values in the "Trunking: From___ To___" fields in the Repeater Config screen can be altered from "T" & "T" to accommodate specific trunking schemes that are unique. These values will affect overall system performance and should be left at default unless your system has particular trunking needs.

DISPATCH OPERATION (Mobile to Mobile Calling)

The Model 452 and Model 459 Trunking Controllers are more than just traditional trunking logic units. They each perform the following major functions:

- Controls 2 to 20 channel repeater trunking, or 1 channel stand-alone sites.
- Accumulates air time for two time-of-day periods (prime and non-prime time) for its home users.
- Validates mobile access to prohibit invalid mobile users.
- Monitors mobile activity in real time on each repeater.
- Stores repeater loading data for current and previous day's system usage as well as "busy" data for all repeaters.
- Monitors inputs for busy conditions on shared channels.

When a mobile user wants to call a group of users, he/she presses the microphone push-to-talk button on his/her mobile radio. The radio tunes to a free channel and transponds data packets with the repeater logic unit that then becomes busy with the calling mobile. Using the repeater bus, the repeater controller tells all other Model 452s and Model 459s in the system which user group (home channel + ID) is being called. If the calling mobile is not on its home channel, then the members of the called group are still tuned to their home channel repeater. To get the group together on the calling repeater, the home repeater sends "Go To" data packets to cause the called radios to tune to the calling repeater frequency.

As long as the calling mobile remains keyed, the controller sends data packets to keep the group together, and the calling mobile can talk to the group. As soon as the calling mobile releases his/her microphone button, the controller sends the group "home" with a "turn-off" code and releases the repeater for another one-way "conversation".

This so-called "transmission trunking" is very efficient in the use of air time. Less than 300 milliseconds is required to get a dispatch message going, and less than 200 milliseconds to release the channel each time.

SHARED CHANNEL OPERATION

The Model 452 and 459 were designed to make adding them to an existing tone panel equipped repeater an easy task. A dedicated connector on the back of each controller accepts the repeater connections directly from the tone panel. Dedicated hardware and software in each controller monitors the "PTT In" input from the tone panel and asserts PTT and switches the tone panel's audio out to the repeater if the controller is not already busy with an LTR call when the "PTT In" goes low for a programmable delay time. While the tone panel has control of the channel the Model 452/459 will indicate it is busy on the repeater bus and no LTR data packets will be sent out the channel. The controller is considered to be "cross-busied" when it is in this state. When the Model 452 or 459 is busy with an LTR call it will assert "Busy Out" to indicate to the conventional tone panel that the channel is in use.

Note:

LTR users should not be homed on shared channels, they will not receive "goto" messages when the controller is in the cross-busy state.

Two other conditions, in addition to the "PTT In", can cause the Model 452 and 459 to enter the cross-busy state. First, if the Tx Frequency Monitor (TX Mon) input goes low for a programmable delay time, and secondly, if the COR input is high for a programmable delay time with LTR data not being detected. If either of the above two conditions has caused the controller to enter the cross-busy state, the "PTT In" from the connected tone panel will continue to be monitored and if it goes low for the programmable delay time it will be processed as if the other cross-busy condition did not exist.

For the Model 452 or 459 to exit the cross-busy state, the condition must be false for a programmable hold time.

> **Note:**
>
> **The use of the COR input as a cross-busy indicator can be disabled in the Repeater Configuration programming in TCBase.**

Mobile Call Processing

For calls initiated by the mobile, both controllers monitor the discriminator audio from the repeater's receiver. If an LTR mobile accesses the channel, the Model 452 or Model 459 decodes the LTR data packet and takes control of the channel.

Conversely, if a conventional mobile accesses the channel with its CTCSS tone, the conventional controller decodes the tone and requests control of the channel by activating its PTT output. The M452/459 will then grant the conventional controller control of the repeater as long as it is not busy with a LTR call. When the channel is in use by one controller, the other controller ignores the receiver discriminator input.

Landline Call Processing

For calls initiated from a landline, each controller monitors its incoming telephone line. When a call arrives, and the radio channel is available, the respective controller grabs the radio channel by activating its PTT output.

If a telephone call comes into the Model 459 when the radio channel is already busy, the phone line is answered to check for maintenance access. (Typically, a modem call from the office computer for TCBase update, billing retrieval, or system monitoring.). If the calling party is not a computer modem, then reorder tones are played for a few seconds and the call is disconnected.

BILLING INFORMATION

Dispatch Airtime

Each Controller is equipped to total the airtime used and number of accesses for two time-of-day periods by each of the 250 IDs on that repeater home channel. By monitoring the control bus, the Controller records usage by its home channel users, even when the users are trunked to other channels.

Airtime accumulation is kept to the nearest second, so customers are accurately billed for their short dispatch conversations. When you import the airtime values into your billing system, you can convert these totals into minutes if necessary. TCBase retrieves the airtime totals into your office computer for import into your billing system.

Interconnect Airtime (Model 459 only)

Each Model 459 is equipped to total the air time used and number of accesses for two time-of-day periods by each interconnect ID on that repeater home channel. By monitoring the control bus, the Model 459 records usage by its home channel users, even when the users are trunked to other channels.

Airtime is accumulated for each interconnect call to the nearest second. You can specify that the Model 459 round calls up to the next minute before adding them into the air time totals. In addition, you can ignore short calls and not add them into the air time totals, such as for giving people "free" 3-minute calls (see the Model 452/459 TCBase operation manual, Part No. 025-9451).

TCBase retrieves the airtime totals from your Model 459s and Model 452s and then puts the data onto your office computer hard disk in ASCII file format. You can use these files with Zetron's billing system or your own.

Call Detail (SMDR)

For each telephone call (land line to mobile and mobile to land line) that is processed by the Model 459, a call detail record is generated and stored in its internal SMDR memory. These records keep track of length of call, number dialed (mobile to land line), time of day, date, user ID, and status of call. The memory is automatically protected from power failures for more than 5 years of continuous power-off. *No* records are stored for dispatch communications.

Calls that are determined to be "incomplete" can be omitted from the call detail memory to save space and retrieval time. In the Site Config Interconnect database, you specify that local calls shorter than a specific time be discarded. With this feature, you can 1) sell "free" 3-minute local calls, 2) eliminate calls that are not answered by the mobile, or 3) not charge for calls that don't go through in so many rings. Toll calls shorter than the minimum of the programmable "minimum call time to store" and 30 seconds are not stored. This gives you more room in your call detail buffer and reduces the telephone time to retrieve billing records from the site.

The time accumulation for land line to mobile calls begins when the mobile radio users keys up to answer the ringing tones from the Model 459. On mobile to land line calls, there is not so positive an indication of "called party answer". The Controller begins the call timer on these calls when dialing is complete.

Your office staff uses the TCBase system to retrieve call detail records from the Model 459s by telephone modem. Individual named and dated computer files are generated in ASCII data format each time you perform a retrieval. At the end of a billing period, these files are collated and sorted by your billing system to produce invoices for each customer account.

SMDR call records are stored in compact binary images inside the Model 459 to save space and reduce transmission time. Each record requires only 16 bytes of storage in the Controller. Transfer of this data to the office computer by 1200 bps modem occurs at approximately 400

records per minute. On large systems, you can further reduce communications time by using a high speed modem connected to the front panel RS-232 port on the Controller.

INTERCONNECT FUNCTIONS

The Model 459 includes all of the Model 452 functionality and additionally offers interconnect operation. The following subsections describe some of those distinct functions.

Land Line to Mobile Calling

A land line party calls an LTR mobile party by dialing the telephone number of an interconnected LTR channel. With End-to-End telco interface equipped Model 459s, this telephone number accesses the Controller by "ringing the line." The Model 459 "answers" with tones or plays voice prompts to the phone caller. The caller then uses his/her Touch-Tone telephone to key in the mobile User ID as a five digit number (HHIII, where HH is the mobile's two-digit home channel and III is the mobile's three-digit ID). Instead of the five-digit ID code, a Model 459 site can be programmed to accept a four-digit access code.

When a Model 459 is equipped with an E&M interface, access to the site is via an E&M Type 1 line from the central office or direct via RF or microwave links. The 4-wire audio system into the Controller eliminates any hybrid circuitry at the site. The E&M signals supervise interconnect calls and can carry "DID or overdial" type calls. With an E&M Type 1 line from the central office, incoming calls are DID, but unlike traditional DID circuits outgoing calls are allowed. A DID call allows all interconnected mobile users to have their own personal telephone number. This eliminates the need for phone callers to "over dial" the 5-digit number, and callers can use old-style rotary telephones to reach mobile users. If an RF or microwave link is being used interface equipment at the base end of the system (such as a PBX or Tellabs/Wescom module) determine whether the E&M link will act like a DID or overdial type of circuit. Programming settings in the Model 459 tailor its software to handle the circuit.

If the LTR channel is busy with a dispatch call when the phone "rings", the Model 459 waits for the mobile user to release PTT and end their short transmission. At that time, the mobile user will trunk to a free channel so the telephone party's call can be processed.

The Model 459 checks the database to make sure that the User ID is an interconnect ID and has been validated for service. If so, subaudible LTR data packets are generated to the designated mobile along with audible ringing tones. The mobile has one of two "Answer Times" as programmed in the Site Config Interconnect database to press PTT and answer the call. Some users can be programmed for long times so they can answer their "horn honk".

Once the call is answered by the mobile party, telephone audio is opened to the mobile and the call timer and billing timer begin. The mobile and phone parties can then converse (see "CONVERSING" on page 3-15).

Second Overdial

If the overdialed ID is not interconnect or is not valid, and the incoming call is not a DID call, the caller will hear a "retry" tone. At this time the caller will be given another opportunity to enter a valid ID. After the second try, if the ID entered is still invalid, the phone party will hear "error" tones and the call will be disconnected. If the incoming call is DID, no retries are allowed.

Mobile to Land Line Calling

The mobile party selects an interconnect ID on their mobile radio. Then the user presses the PTT or SEND key to access an interconnected LTR channel. If there is no free channel at all, the radio will not transmit and will immediately return a busy indication to the mobile user. If there is no free interconnected channel, the mobile may end up on a dispatch channel and will get "turn off" packets from the Controller. If a mobile ends up on an interconnected channel that does not allow outgoing calls the Model 459 will play busy before sending "turn-off" packets.

If the mobile accesses a channel equipped with an interconnected Model 459, the mobile's ID is validated for outgoing interconnect service from the User ID database settings. The Controller waits for the mobile to un-key, then accesses the telco line, waits for dial tone from the telephone system, and cuts the audio through to the mobile.

The mobile then has to enter the phone number to dial, using the DTMF keypad on the mobile radio. As programmed in the Site Config Interconnect database, the mobile user has specific time limits within which he/she must enter the first and subsequent digits of the telephone number into the Model 459. Phone number dialing is regenerated by the Model 459s built-in DTMF generator, providing accurate dialing in the presence of weak radio reception. A minimum and maximum number of dialed digits (programmed in the Site Config Interconnect database) speeds phone call placement. If the mobile user unkeys after entering the minimum regenerated digits, the Model 459 will assume dialing is completed, and any subsequent digits will not be regenerated; they will pass through directly. These digits will however be stored in the Call Detail Record, up to the maximum regenerated digits, or until the interdigit timeout occurs.

Dialing Restrictions

As the phone number to be dialed is being regenerated by the Model 459, the number is checked for authorization in the User ID database. Specific User IDs can be given privileges for no outgoing, autodial numbers only, local, credit card, operator, long distance or international dialing. Specific calling prefixes can be designated as allowed or restricted in the Site Config Interconnect Prefixes database screen. A `?' can be used to designate a digit as a wild card.

Restricted prefixes are useful for screening out telephone numbers that you wish to prohibit, since they might cost money or are sources of phone abuse. If the prefix is restricted from use by the User ID, the call is terminated before the phone number is completely regenerated, thereby preventing any billing.

Allowed prefixes are useful if you want to limit certain users to dialing a few selected prefixes.

To further prevent "smart" users from cheating the system, the Model 459 can be programmed to prevent dialing extra DTMF digits after a specific time period once the call is placed. The 2nd Dialtone/DTMF Thru and Overdialing Time Limit values in the Site Config Interconnect database screen let you set appropriate call screening conditions.

Autodialing

Up to 100 numbers can be programmed into a Model 459 system as Autodial numbers. The mobile party can use these preprogrammed numbers by entering *nn, instead of a phone number after accessing the system and hearing dial tone. The "*" tells the Controller that the digits to follow are for an autodial number and the "nn" is the two-digit number that indicates which entry in the autodial table to use. After *nn is received the Model 459 outdials the phone number and the call continues as a normal mobile to landline call.

> ☞ **Note:**
>
> **Depending on how an autodial number is programmed, a call can have toll restriction (toll restriction includes prefix restrict and toll privileges) applied to the autodial phone number.**

Auto Overdial Users

Any user programmed as Interconnect can also be programmed as Auto Overdial. These users are treated in a special way when they are homed on a channel with a direct link to another LTR site.

If an Auto Overdial User is homed on a channel with a direct link to another LTR site, when the mobile keys up the Controller will take the phone offhook and overdial the ID or access code of the initiating mobile.

If a user who is programmed as Auto Overdial receives an incoming call, a prompt tone will be sent to the caller once the ID code has been sent out and the caller can begin talking. No ringing tones are sent.

Push-to-Connect (PTC) Users

Interconnect users may be designated as push-to-connect users. Each PTC user has an autodial table entry associated with it, plus if another LTR site is being called, an ID or ACCESS code to overdial on the answering system. When a PTC user keys up, the Model 459 automatically out-dials the autodial number designated for that user, and automatically overdials the programmed ID code if necessary. To make a PTC call, all the user needs to do is key up, no DTMF is required.

A time delay can be programmed as part of the PTC user configuration, which is injected before the Model 459 does the autodialing. This allows a user programmed as PTC to use the same ID code to make regular phone calls, if equipped with a DTMF keypad.

CONVERSING

Half-Duplex Calls

The mobile party presses the PTT microphone button whenever he/she wishes to speak to the land line party, and releases the button to listen. If the "Turn-Around" beep is programmed "Y" in the User ID database, then the phone party will hear a "go-ahead" beep each time the mobile releases the PTT button.

There is a "Turn-Around" time programmed in the Site Config Interconnect database. This timer (typically 30 seconds by FCC rules) requires that the mobile periodically presses PTT to keep the interconnect conversation active, otherwise a short warning beep is issued to the mobile. If the mobile presses PTT within 5 seconds of the warning, the conversation stays alive, otherwise the Model 459 terminates the call.

An interconnect call can be terminated by either the land line or mobile party by pressing the "#" key on their DTMF keypad. The person on the phone side must hold the # key for a long 1/2 second before the Model 459 will terminate the call. A programmable duration (60 to 500 milliseconds) # key from the mobile radio party will terminate the call almost instantly.

If the land line party just hangs up the telephone, the Model 459 can detect this and terminate the call automatically if the telco circuit is equipped for one of the following:

- a "ground start" end-end line
- a loop start end-end line with reverse battery supervision
- E&M trunk idle supervision
- dial tone detection (only detected when mobile carrier and/or packets are not present)

Note:

For further details on telco services, please contact Zetron technical support.

If the call is ended without a "#" key or telco disconnect detection, the Model 459 will terminate the call when the mobile turn-around timer expires (set in Site Config Interconnect database). Billing timing stops when the call is actually terminated. Obviously, to avoid being billed for wasted air time, your clients are encouraged to use their "#" key to end calls. Some microphones can automatically generate "#" when placed back in their hanger to make call termination quick and easy.

The Model 459 runs a timer during the conversation and checks its value against the Call Limit as determined by the Dynamic Call Limit Table (see "Dynamic Call Limiting" on page 3-7). For 30 seconds prior to call limit termination, the Controller plays a "tick" once per second to the mobile party as a countdown warning. If the mobile party is transmitting during this warning period, he/she will not hear the ticks.

In addition, a warning tone time can be set in the Site Config Interconnect database. When the programmed time has elapsed a "warning" tone will be played three times at fifteen second intervals. This tone can be used to let callers know that they have exceeded some billing threshold, and are now being billed at a premium.

Full-Duplex Calls

The audio path is open continuously between the phone and mobile parties for the entire conversation. Either party can speak to the other whenever they wish, interrupting freely. There are no turn-around beeps or turnaround time requirements to concern the mobile party. In most ways, LTR full-duplex interconnect rivals mobile telephone systems with simplicity of use.

In full-duplex mode the call can be terminated by the mobile party at any time by pressing the # key on the DTMF keypad. The landline party can only disconnect with a # if the mobile carrier and/or data packets are not present. The person on the phone side must hold the # key for a long one half second before the Model 459 will terminate the call. A short 80 millisecond # key from the mobile radio party will terminate the call almost instantly. The # key termination may be programmed to be active for durations from 60 to 500 milliseconds received from the mobile.

If the land line party just hangs up the telephone, the Model 459 can detect this and terminate the call automatically if the telco circuit is equipped for one of the following:

- a "ground start" end-end line
- a loop start end-end line with reverse battery supervision
- E&M trunk idle supervision
- dial tone detection (only detected when mobile carrier and/or packets are not present)

Note:

For further details on telco services, please contact Zetron technical support.

Most full-duplex LTR mobile units automatically send a "#" key when the handset is returned to its hanger, thereby terminating the call. If the handset is misplaced and the mobile radio continues transmission, the call can still be terminated by telco circuit conditions (see above). However, the "stuck transmit" condition of the mobile will cause a succession of interconnect attempts and prevent other mobiles from accessing the system. In this case, you must rely on the mobile's built-in transmit time-out timer (TOT) to shut it off. If the mobile signal fades completely, the call is terminated when the turn-around timer expires (programmed in TCBase Site Config Interconnect database).

The Model 459 runs a timer during the conversation and checks its value against the Call Limit as determined by the Dynamic Call Limit Table (see "Dynamic Call Limiting" on page 3-7). For 30 seconds prior to call limit termination, the Controller plays a "tick" once per second to the mobile party as a countdown warning.

> ☞ **Note:**
>
> **You can use TCBase's Traffic Monitor feature to access the system and determine exactly which mobile User ID is holding any channel busy.**

AUDIO COMPANDOR

The audio compandor processor in the Model 459 improves telephone interconnect audio fidelity by reducing the noise introduced by radio signal propagation. The 2:1 compandor circuitry is similar to that used in cellular mobile telephone systems.

Individual User IDs are programmed using TCBase to utilize or bypass the compandor audio processor. In this way, you have full flexibility and control over audio processing. As you add new compandored mobiles to the system, you can obtain the full benefit of the compandor feature.

VOICE MESSAGING ACCESS USING THE # KEY

A user can turn off the pound (#) disconnect feature during a call. This is sometimes necessary for customers who use voice messaging systems. To disable the DTMF #:

1. Press the DTMF `*' key twice, "* *". The Model 459 plays four low tones to indicate that the `#' hangup has been disabled.

2. Press the DTMF `*' key twice again and the Model 459 plays four high tones to indicate that the `#' hangup has been re-enabled again.

Since some voice messaging services also respond to the DTMF `*' key, it is recommended that you dial the voice mail number and disable the DTMF `#' during the ringing to keep the voice mail system from being confused.

Note:

For this application, the DTMF '*' key must be pressed for at least 500 ms for it to be recognized.

STATION IDENTIFICATION

The built-in tone generator plus software on the main board provides station identification using International Morse Code CW ID. When enabled through TCBase programming in the Repeater Configuration database, transmissions occur automatically at programmable intervals. If you already have a channel transmitting station IDs, you simply disable the Model 459 or Model 452 through programming.

During station identification, the controller sends sub-audible LTR data packets with an ID=253, thereby marking the channel busy so that mobiles will trunk off to a free channel (unlike some systems where mobiles end up camping on until identification finishes). Also, if the ID timer comes due while the channel is busy, the Controller waits for the channel to go idle before commencing station identification.

OPTIONAL FEATURES

Custom Voice Prompts

This optional plug-in circuit card provides recordable voice prompts for each Model 459 in which it has been installed.

If a voice prompt has not been recorded the progress tones will be played. As the voice prompts are recorded they will be played instead of the progress tones. The following are some of the voice prompts available:

- Welcome
- Call cannot be completed
- Thank you
- Please wait, your call is being processed
- The number is not valid, please retry
- Please proceed

Note:

For complete details on custom voice prompts, see the Zetron TCBase operation manual (Part No. 025-9451).

Dial Click Decoding

This optional plug-in circuit card provides dial click decoding for each Model 459 in which it has been installed. The dial click decoder card allows the Model 459 to process numbers dialed from a rotary telephone. The dial click feature is enabled in the Repeater Configuration database.

Four dial click decode modes are provided.

- Modes 0 and 1 decode clicks without requiring a calibration digit, but use different algorithms for detecting and counting the clicks.
- Mode 2 requires a leading '0' to be dialed for calibration.
- Mode 3 requires a leading '1' and '0' to be dialed for calibration.

Depending on your telephone system, one mode may be more reliable than another. Some experimentation may be required to determine the best selection.

4. CONTROLLER INSTALLATION 4-1

GETTING STARTED 4-1
Preparation 4-1
Installation Equipment 4-1
Power Considerations 4-2
Adjustment Overview 4-3
Installation Checklist 4-4
CONTROLLER TEST MODE 4-4
Accessing Test Mode 4-4
Test Operation 4-4
STEP 1. SETTING THE JUMPERS 4-5
STEP 2. CLEARING MEMORY 4-8
Hard Reset 4-8
Soft Reset 4-9
STEP 3. SETTING DIP SWITCHES 4-9
STEP 4. INSTALLING THE REPEATER 4-11
Controller Adjustments 4-13
Receive Audio Adjustments 4-15
Setting Repeater Interface Levels 4-16
Transmit Audio Adjustment 4-17
STEP 5. CONNECTING TRUNKING CONTROLLERS 4-17
STEP 6. TESTING DISPATCH CALLS 4-18
Single Channel Dispatch 4-18
Dispatch Trunking 4-19
STEP 7. PROGRAMMING SITES, REPEATERS AND USERS 4-20
STEP 8. RECORDING CONFIGURATION DETAILS 4-21
Final Check 4-21

4. CONTROLLER INSTALLATION

GETTING STARTED

This installation section is designed for use by an experienced technician who understands LTR trunking systems and the test equipment needed to install these systems. The installation instructions in this section are identical for both the Model 452 and Model 459 controllers. Additional installation details, including Model 459 telephone interface installation, cross-busy controllers, and field upgrades are provided in Sections 5 and 6.

The Model 452 and Model 459 Controllers are designed with heavy-duty faceplates that have holes to accommodate standard 19" rack mounting. The Model 452 Dispatch Trunking Controller is one standard rack unit high (1.75") and provides direct access to the adjustment controls on the front panel. The Model 459 Interconnect Trunking Controller is two standard rack units (3.5") high and has a removable cover on the front panel for easy access to adjustment controls. It contains a plug-in telephone interconnect board (there are two different types of interfaces to cover most applications).

Caution

This equipment generates, uses, and can radiate radio frequency energy. If it is not installed and used in accordance with the instruction manual, it may cause interference to radio communications. Installation should be accomplished by personnel with experience in radio trunking systems. Specialized knowledge in telephone systems is also important when interconnecting with telco or microwave networks.

Preparation

We recommend that you allot sufficient time in your radio shop to become familiar with the Model 452 and 459 Controllers. Setup and operate the first Zetron controlled repeater there before traveling to the repeater site. Although these controllers are physically small, their comprehensive capabilities require time to adjust them and to program the database. If you need assistance at any point during the installation, please contact Zetron technical support.

Installation Equipment

The following supplies are recommended to ease installation and programming:

Item	Used for	in Step #
Tool kit with screwdrivers and wire stripper	mechanical assembly	1, 3, 4
Service monitor with deviation meter	adjusting receive and transmit levels	4

Item	Used for	in Step #
Voltmeter	adjusting receive and transmit levels	**4**
LTR radio with DTMF keypad*	adjusting receive and transmit levels	**6**
Zetron Model 452 or 459	*system component*	**all**
Radio repeater	*system component*	**4, 6**
Cable from repeater to controller	*system component*	**4**
Controller cables between all units	*system component*	**5**
IBM-compatible PC (w/ Hayes modem)	programming database with site, repeater, user ID information	**6, 7**
RS-232 communication cable	programming connection	**6, 7**
Telephone line or telco simulator*	adjusting telco levels and balance	*Section 5*
Modular telephone cord*	telephone connection	*Section 5*

* These items are required only for telephone interconnect applications. (Model 459)

Caution

To protect this equipment against high voltage surges induced by lightning, care must be taken to observe proper grounding practices for both the radio and telephone transmission systems. The equipment warranty does not cover damage due to inadequate surge protection.

Personnel with experience in radio-telephone equipment should perform the installation.

Zetron recommends use of *additional lightning protection equipment* such as Zetron's DeadBolt Lightning Arrestor to increase security against unwanted downtime and improve system reliability in harsh environments.

Power Considerations

These controllers can be powered by a 12 V_{DC} supply. The power consumption of the Model 452 is approximately 300 mA and the power consumption of the Model 459 is approximately 400 mA on an end-to-end interconnect unit. Generally, sufficient spare +12 V_{DC} power is available from the radio repeater to power the controller.

The controllers also have a built in full-wave rectifier that can generate the internal +12 V_{DC} from a 12 V_{AC} power source applied to pins 1 and 2 of the Radio Interface connector.

When a conventional controller is used in conjunction with the M452 or M459 controller, there are additional power considerations. The Zetron controllers connect pin 1 of the Radio Interface connector to pin 1 of the Aux Connector in order to supply DC power to the

conventional controller. This means that the external DC power supply must supply the current for both controllers when the conventional controller receives its power from pin 1 of the Aux Interface connector of the M452/459. If AC power is supplied to the M452/459 controller, then supplying power to the conventional controller could be more complicated.

Figure 4-1 is a simplified diagram of the power supply connections in the Model 452 and 459 controllers. Note that DC power is applied to pins 1 and 3 of J1 while AC power is applied to pins 1 and 2 of J1.

Note:

For details on voltage and current specifications of the Model 452 and 459, refer to Section 2.

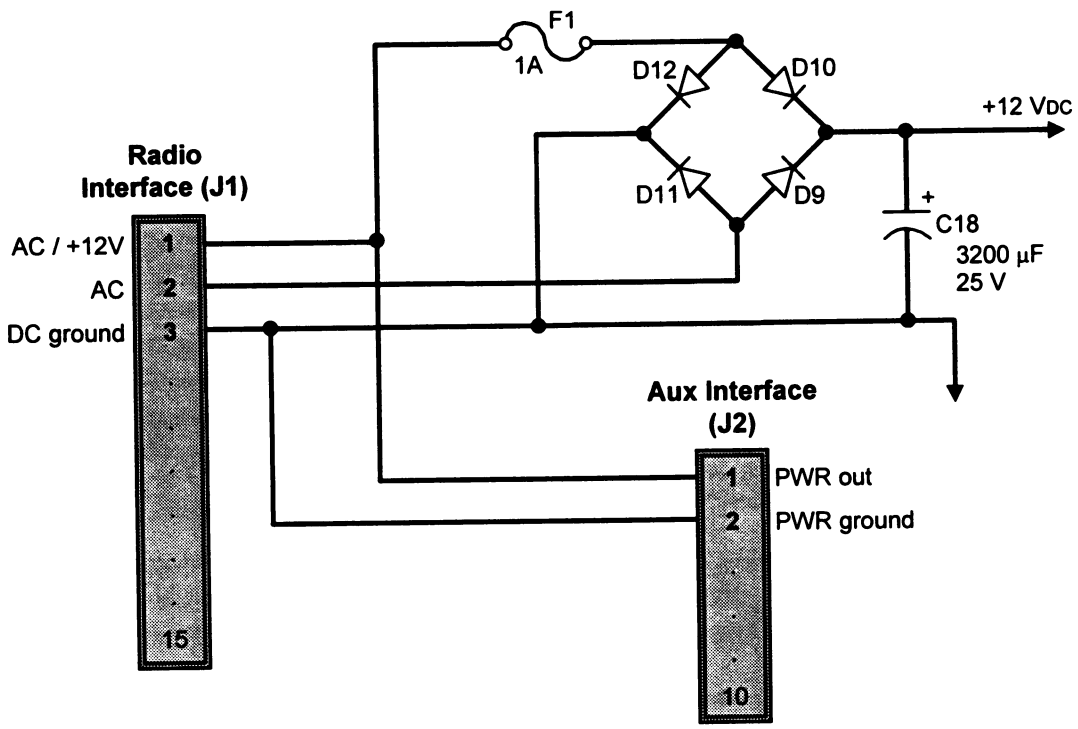

Figure 4-1. Model 452/459 Power Wiring Diagram

Adjustment Overview

Both controllers are built from the same printed circuit board. This translates into identical setup and adjustment procedures for both units. The Model 459 has some extra jumpers, test points and controls for the telephone interface, voice prompt and dial click options boards and two additional front panel LEDs that do not exist on the Model 452. Since the Model 452 is a subset, the Model 459 physical layouts are used in this section. The telephone interface installation information for the Model 459 is located in Section 5.

These controllers can be used with wide (25 kHz) and narrow (12.5 kHz) band channel spacing. The LTR data modulation (1 kHz deviation) has been standardized for wide band systems while narrow band systems can vary from site to site and radio manufacturer. Use Table 4-4 to assist in the adjustments for narrow-band systems.

Installation Checklist

Start with the unit in your shop and complete the following steps. Please read through the checklist to get an idea of what the installation consists of, before beginning the procedure. Each step is described in further detail later in this section.

Step 1. Set configuration jumpers (see page 4-5).

Step 2. Clear memory (see page 4-8).

Step 3. Set DIP switches (see page 4-9).

Step 4. Install and modify repeater (see page 4-11).

Step 5. Make trunking connections (see page 4-17).

Step 6. Test dispatch calls (see page 4-18).

Step 7. Program site database and time (see page 4-20).

Step 8. Record configuration details (see page 4-21).

Once the system is operating well in your shop, record the equipment settings and any pertinent notes on the worksheets provided in Section 8. Keep these worksheets for reference, as they simplify future installation of additional Zetron units.

CONTROLLER TEST MODE

A test mode is provided by the Model 452 and 459 to allow easy testing and adjustment of the controller. A description of the test mode and how it is accessed is provided below.

Accessing Test Mode

Follow the steps below to place the Model 452 or 459 into test mode:

1) Place switch A1 of the main board to the UP position.

2) Press the front panel SETUP button twice (or hold depressed until the LEDs flash) to force the controller to reset and read the DIP switches.

Test Operation

The controller starts in test *mode 1* and cycles through the modes in order. Press the SETUP button on the front panel twice to advance to the next mode. The unit resets if the SETUP button is pressed too frequently. Table 4-1 identifies the test modes available in the Model 452 and 459.

Table 4-1. Test Mode Operation

Mode	Used to Set	Description
1	transmit audio level	Sends a 1kHz sine wave over the channel.
2	transmit audio and data level	Sends a 1kHz sine wave plus LTR data for the test id code over the channel.
3	transmit data Level	Sends LTR data for the test ID code over the channel.
4	receive audio level	Opens the repeat audio path based solely on the presence of carrier.

If an interconnect call is made into any Model 459 in test mode, the unit answers and sends 400 Hz and 2500 Hz tones out the phone line continuously. In addition, the Model 459 simultaneously opens the audio path from the phone out over the channel.

STEP 1. SETTING THE JUMPERS

Each of the user-configurable jumpers are summarized in Table 4-2. Jumpers JP9, JP11, and JP13 provide gain range selection for key signals and are set later in the adjustment procedure. The other jumpers define system operating parameters and can be set in this step of the installation process.

Follow the steps below to configure the main board jumpers for your specific application.

- ❑ 1. Remove the top cover of the controller.
- ❑ 2. Set the repeater configuration jumpers, using Table 4-2 as a guide. Figure 4-2 illustrates the location of each jumper on the main board.

  Every repeater has a unique configuration, specific to the manufacturer. For details on connection to the repeater, see "STEP 4. INSTALLING THE REPEATER" on page 4-11.
- ❑ 3. Record the jumper settings in the jumper setting worksheet in Section 8. (See "STEP 8. RECORDING CONFIGURATION DETAILS" on page 4-21.)
- ❑ 4. Display the completed worksheet at the site for future reference.

Table 4-2. Model 452/459 Jumper Settings

JP	Description	Position A	Position B
5	Telco type input (*Model 459 only*) Set this jumper to match the type of telephone interface card installed in the controller.	End-to-end	E & M
6	Telco type output (*Model 459 only*) - see JP5	End-to-end	E & M
7	Radio transmit audio output Set this jumper to position A when the repeater discriminator audio is connected to the controller. This provides de-emphasis (flat signal) prior to sending the audio to the telephone or transmitter.	Discriminator input	Flat
8	Radio receive filter Always set this jumper to position A to filter the LTR data out of the repeated audio sent to the telephone or transmitter.	High pass filter	Bypass
9	Radio receive amplifier gain Set this jumper to adjust the input gain by 20 dB for operation with any repeater. Set this jumper while adjusting the RX AUD pot in step 4.	X22 dB (HI) gain	X2 dB (LO) gain
10	Transmit data output coupling Normally set this jumper to position B to provide AC coupling of the LTR data to the transmitter.	DC	AC
11	Transmit data output level Set this jumper to adjust the course LTR data output gain for operation with any repeater. Set this jumper while adjusting the TX DATA pot in step 4.	High	Low
12	Transmit data output signal format Normally set this jumper to position A to provide analog LTR data output to the repeater. Some repeaters can, however, use digital data directly.	Analog	Digital
13	Radio transmit amplifier gain Set this jumper to adjust the course transmit audio output gain for operation with any repeater. Set this jumper while adjusting the TX AUD pot in step 4.	High	Low
14	Transmit data polarity Always set this jumper to match the polarity of the radios in the system.	Normal	Inverted
15	Receive data polarity - see JP14	Normal	Inverted
19	COR input select — Internal = 1-2 & 3-4 | External + = 5-7 & 6-8 | External – = 5-6 & 7-8 Set this jumper to identify which repeater receiver COR circuit is enabled. The internal setting uses the controller's squelch circuit and control to identify presence or absence of radio carrier. Set the jumper to one of the external settings to use the repeater receiver COR circuit, instead. The CARRIER LED will illuminate whenever the repeater is receiving a radio signal.		

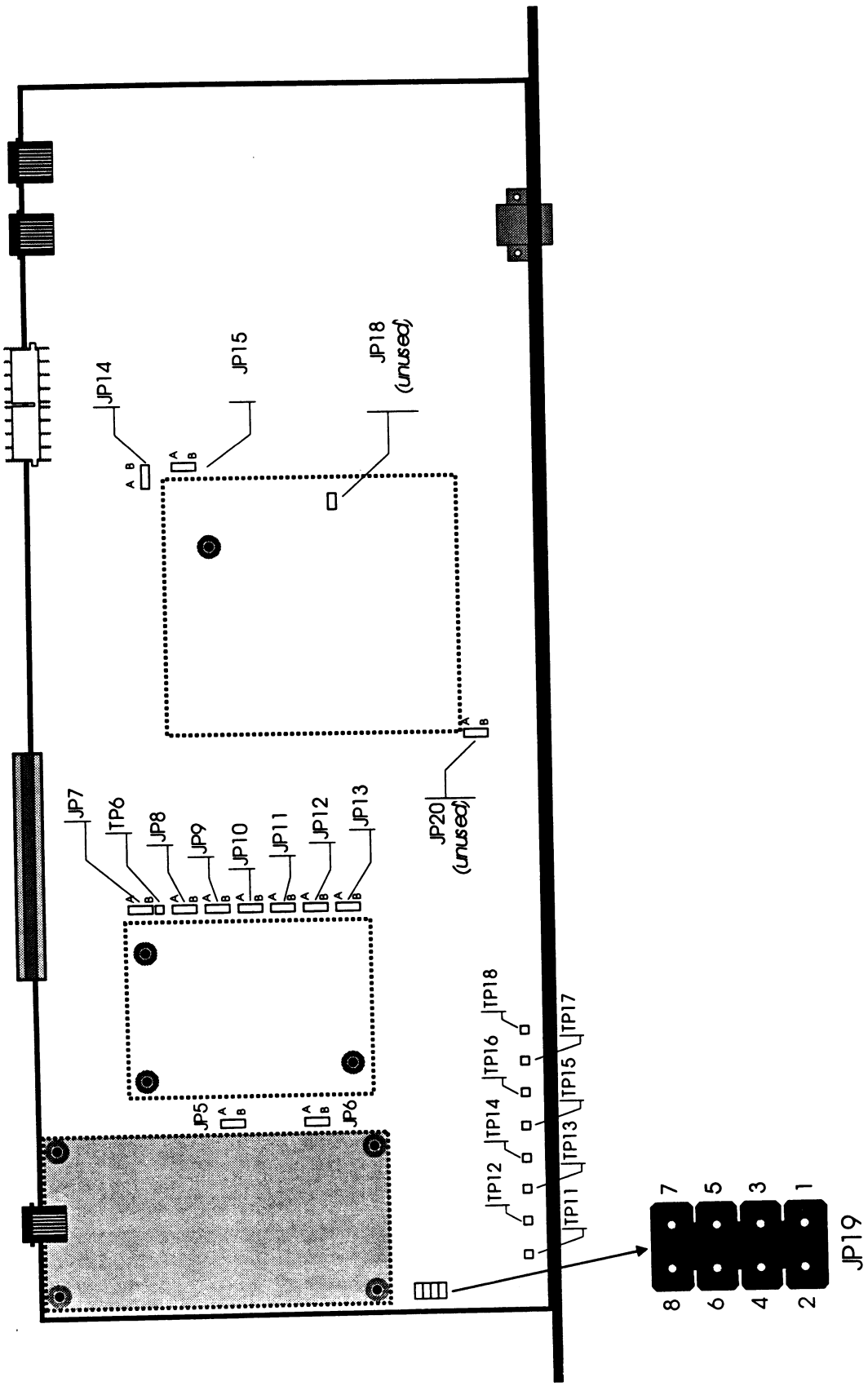

Figure 4-2. Main Board Jumpers and Test Points

STEP 2. CLEARING MEMORY

Hard Reset

A hard reset clears all database and billing information from the trunking controller memory. A hard reset is recommended after,

- installing the Model 452 or 459 Trunking Controller for the first time.
- moving the unit from one channel to another.
- putting a spare unit into service.

Caution

A hard reset erases both the airtime accumulator and the call detail record (SMDR) files from the Controller memory. Retrieve this data before performing a hard reset.

Follow the steps below to perform a hard reset:

❑ 1. Set all of the front panel DIP switches to the DOWN position.

❑ 2. Power on the controller, if it is not already powered on. If the controller is already on, reset the unit by pressing and releasing the SETUP switch twice, or by pressing and holding the SETUP switch until the DTMF, STATUS, POLL and SYNC LEDs flash briefly.

❑ 3. Press and release the front panel SETUP switch four times. The rate at which you press the button is important. To get an idea as to how quickly, read the following out loud:

Press...Release...Press...Release...Press...Release...Press...Release

After you release the button for the *second* time, four LEDs (DTMF, STATUS, POLL and SYNC) flash briefly. On the third press and release, these LEDs stay on. On the fourth press and release, the LEDs go out. This indicates that the controller has successfully cleared all of its memory to factory settings.

❑ 4. Set all of the front panel DIP switches back to their normal operating positions.

❑ 5. Press and hold the SETUP switch until the DTMF, STATUS, POLL and SYNC LEDs flash briefly or power the unit down and back on.

Soft Reset

Unlike the full hard reset, a soft reset does not alter the airtime accumulators or the call detail buffer. The soft reset simply "reads" the front panel DIP switches, without clearing memory. A soft reset is recommended after,

- removing or installing the control cable.
- changing switch settings.

A soft reset is executed one of two ways. Either cycle the power (off then on), or follow the steps below to perform a soft reset:

❑ 1. Wait until no radio traffic is busy on the repeater

❑ 2. Press and release the SETUP button *twice.*

- OR -

Press and hold the SETUP button (approximately two seconds) until the four LEDs (DTMF, STATUS, POLL and SYNC) flash briefly. If the LEDs do not flash, press the button again.

STEP 3. SETTING DIP SWITCHES

The DIP switches on the front panel of the Model 452 and 459 allow easy configuration of the controller. The 4-position bank on the left, labeled A, sets the front panel serial port baud rate, and test mode. The 8-position bank on the right, labeled B, sets the bus master, LTR area bit, and repeater number.

On a Model 459, the small faceplate on the left of the controller front panel must be removed to access the DIP switches. Figure 4-3 illustrates each bank of switches and Table 4-3 describes their functions. The **bold text** identifies the default settings where applicable.

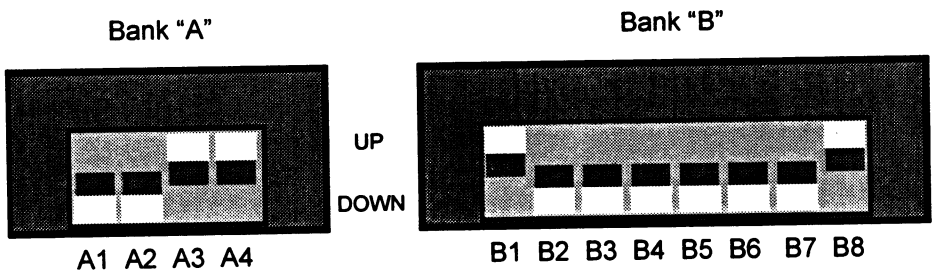

Figure 4-3. Front Panel DIP Switches

Table 4-3. DIP Switch Settings

Label	Switch Description	UP Position	DOWN Position
A1	Test mode for alignment	enabled	**disabled**
A2	Not Used		

A3 & A4	RS-232 baud rate for Communication w/computer (NOTE Maximum speed for the interconnect modem is fixed at 1200 bps. *Model 459 only*)	BPS	A3	A4
		300	DOWN	DOWN
		1200	DOWN	UP
		2400 (*see note*)	UP	DOWN
		9600 (*see note*)	UP	UP

B1	Repeater and Subscriber bus master	generate sync for all units on the repeater bus, poll all units on the subscriber bus. (master *)	receive sync and poll from another unit on the repeater and subscriber buses, (slave)
B2	Not Used		
B3	LTR area selection †	area 1	area 0

B4 to B8	LTR repeater number (1-20)	Repeater #	B4	B5	B6	B7	B8
		1	DN	DN	DN	DN	UP
		2	DN	DN	DN	UP	DN
		3	DN	DN	DN	UP	UP
		4	DN	DN	UP	DN	DN
		5	DN	DN	UP	DN	UP
		6	DN	DN	UP	UP	DN
		7	DN	DN	UP	UP	UP
		8	DN	UP	DN	DN	DN
		9	DN	UP	DN	DN	UP
		10	DN	UP	DN	UP	DN
		11	DN	UP	DN	UP	UP
		12	DN	UP	UP	DN	DN
		13	DN	UP	UP	DN	UP
		14	DN	UP	UP	UP	DN
		15	DN	UP	UP	UP	UP
		16	UP	DN	DN	DN	DN
		17	UP	DN	DN	DN	UP
		18	UP	DN	DN	UP	DN
		19	UP	DN	DN	UP	UP
		20	UP	DN	UP	DN	DN

* Only one logic unit should be setup as master; all others as slaves. Standalone units should be set as bus master.

† Every controller and mobile at the site must be programmed for the same area.

> **Note**
>
> **The Model 452/459 will not read new switch settings until a soft reset is performed.**

Set each DIP switch as follows:

- ❑ 1. Ensure that switch A1 remains in the DOWN position for normal operation. The UP position should be used for test mode alignment only.
- ❑ 2. Switch A2 is currently not used, set it in the DOWN position.
- ❑ 3. Set switches A3 and A4 to identify the appropriate baud rate. The speed should match the rate programmed into the database for local RS-232 communications.

  If the Model 459 has the interconnect option and the internal modem is used for programming, only 300 or 1200 baud can be selected. If switches A3 and A4 are set for 2400 or 9600 baud in this case, 1200 baud is used instead.
- ❑ 4. Set switch B1 to identify which unit is the repeater and subscriber bus master.

  Setup one unit as the bus master (UP position) and the rest as slaves (DOWN position). If the unit is a stand alone, set switch B1 for master mode.
- ❑ 5. Switch B2 is currently not used, set it in the DOWN position.
- ❑ 6. Set switch B3 to identify the LTR area for the entire trunking system. Every logic unit and mobile must be programmed for the same area. The UP position indicates area 1 and the DOWN position indicates area 0.
- ❑ 7. Set switches B4 through B8 to indicate the repeater number 1 to 20. The mobiles use the same numbers to create the correspondence between the channel number and the actual RF frequency pair of a particular channel.

  Switches B4 through B8 are binary coded, with the least significant bit on the right (position B8).

STEP 4. INSTALLING THE REPEATER

Refer to the radio manufacturer's documentation for the appropriate connections to the Model 452 and 459 Trunking Controllers. Zetron has adapter cables and installation application notes available for many popular LTR radios if you do not want to build your own cables. If you have any questions, please contact Zetron technical support for assistance.

The rear panel of the unit houses a 15-pin connector for the radio interface. The terminal block is detachable for fast, easy prewiring. Figure 4-4 illustrates the connector.

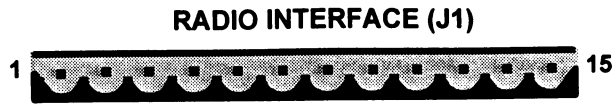

Pin #	Signal	Pin #	Signal
1	AC / +12 V	11	TX OUT
2	AC	12	GND
3	DC GND	13	SUB OUT
7	PTT OUT	14	GND
9	TX MON	15	DISC IN
10	COR IN	4-6, 8	*not used*

Figure 4-4. Radio Interface Connections

Follow the steps below to make the appropriate connections to the repeater.

❑ 1. Use the following signal descriptions to determine which leads are critical for your installation. Keep in mind that the pin locations will be reversed on the provided mate connector (pin #1 on the right and pin #15 on the left).

a. ***Power*** - Apply 12 V_{AC} between pins 1 and 2 or apply 12 V_{DC} between pins 1 and 3. Refer to Section 2 for voltage range and power requirements.

b. ***Ground*** - Do not rely on the cable shield to carry ground. Use pin 3 for power ground, pin 12 for PTT return, and pin 14 for any twisted ground signals.

Do not combine high PTT keying current inputs onto the same ground wire as the low-level audio or data signals!

c. ***PTT Out*** - Open collector conducts to ground to key the transmitter.

d. ***COR In*** - Apply the carrier indication from the receiver, if available, to pin 10. Ensure that JP19 is configured for the appropriate carrier operated relay polarity. (Refer to Table 4-2 on page 4-6 for additional details.) This signal should be connected in a cross-busy application with a conventional controller.

Zetron recommends using the internal controller noise squelch circuit.

e. ***TX OUT*** - Pin 11 carries transmit audio from the controller to the repeater exciter.

f. ***SUB OUT*** - Pin 13 carries sub-audible transmit data from the controller to the repeater exciter. Inject this 10-150 Hz signal into the DPL or DCG input on the repeater.

g. ***DISC IN*** - Apply audio from the repeater receiver to pin 15. The signal bandwidth should fall between 10 Hz and 10 kHz, containing high frequency noise, voice audio, and sub-audible data.

h. ***Shield*** - Ground the cable shield at only one end, preferable adjacent to the controller.

❑ 2. Construct a shielded cable to connect the repeater and the controller. Attach the included connector to the controller end (Model 452 or 459) of the cable. Carefully tighten the corresponding screw down on each lead to assure a solid connection. Figure 4-5 illustrates the resulting connector.

Prewired cables are available from Zetron for many popular repeater models. Contact a sales engineer for ordering details.

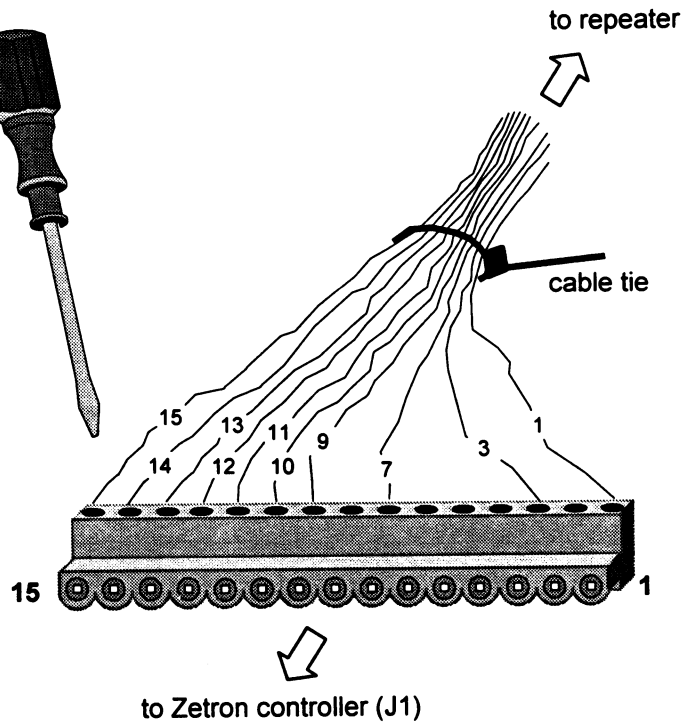

Figure 4-5. Radio Interface Cable

❑ 3. Label each wire or use color-coded wires and document the signal "colors." This helps avoid confusion and simplifies troubleshooting later. It is also a good idea to bundle the wires just behind the connector with a cable tie or other suitable binder. This keeps each of the connections from becoming loose due to excessive stress and movement.

❑ 4. Attach the appropriate connector to the repeater end of the cable. This interface is unique, depending on the make and model of repeater. For details on the specific repeater leads, refer to the manufacturer's documentation.

Controller Adjustments

The Model 452 and 459 LTR Trunking Controllers perform reliably only after the signaling levels of the repeater are properly aligned. The following procedure outlines a general method for configuring the Model 452/459 for LTR trunking service. Some repeater interfaces may require modification before the adjustments can be performed.

This procedure requires a communications service monitor and two mobile transceivers programmed with the "Test ID" (programmed into the TCBase, Repeater Configuration). A line-isolated oscilloscope or frequency-selective voltmeter is also recommended for voltage measurements.

Figure 4-6 illustrates the location of pots, test points, and LEDs used in the following procedures. It is a good idea to find each item on the unit before beginning the adjustments. On the Model 459, the small faceplate on the left of the front panel must be removed to access the pots.

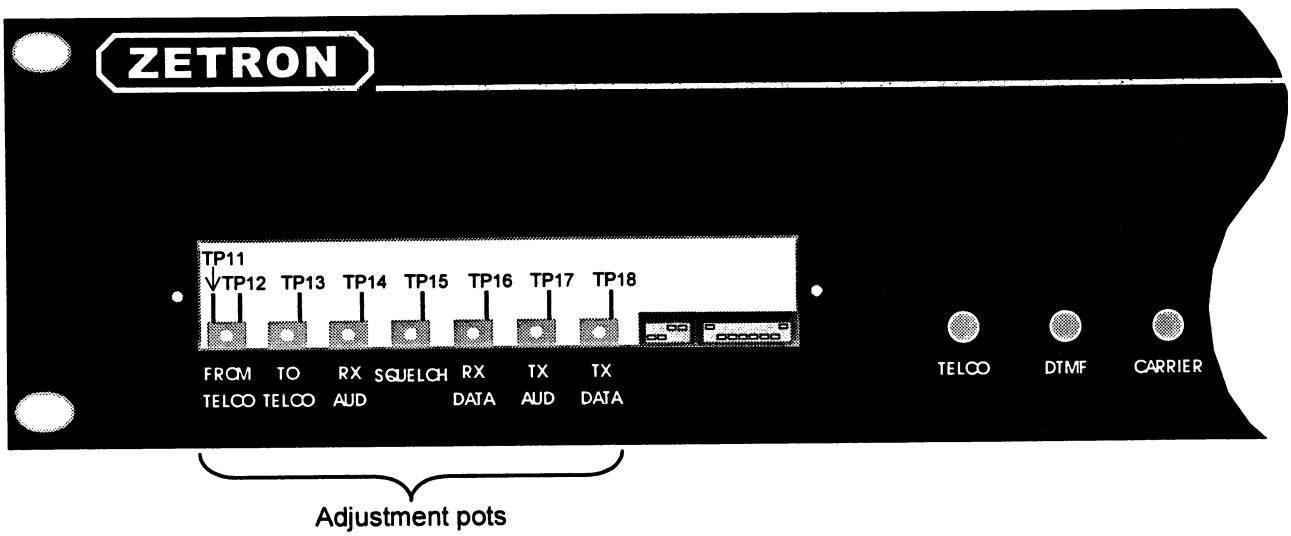

Figure 4-6. Potentiometers and Test Points

The transmitter exciter and receiver sections of the repeater must be properly aligned per manufacturer specifications before the mobile transceiver can communicate with the Radio Frequency (RF) components of the trunking system. When aligning the receiver, be sure to align the discriminator balance to prevent LTR data degradation. Refer to the service manual provided by the repeater manufacturer.

The repeater receive audio is brought into pin 15 of the radio interface connector (J1). During normal operation the signal consists of two parts - the speech information (above 300 Hz), and the LTR data packets (below 300 Hz). The circuits processing these separate parts are adjusted separately because of the interaction when both components of the signal modulation are present.

Wide-band systems have standardized on 1000 Hz of LTR deviation and 4000 Hz of voice audio maximum for a total combined modulation of 5000 Hz. Zetron controllers are adjusted with 1000 Hz of LTR modulation and 3000 Hz (75% of 4000) audio modulation to allow headroom for people who shout into the radios in noisy environments.

Narrow-band systems allow the system operator the flexibility to select the amount of LTR deviation and voice audio with a total combined modulation of 2500 Hz. Zetron controllers are adjusted with the LTR modulation and voice audio modulation shown in Table 4-4.

> **Note:**
>
> **The voice audio deviation used for system setup is 75% of the maximum modulation allowed.**

Receive Audio Adjustments

Adjust the receive audio input on the Model 452 or 459 as follows:

- ❑ 1. Confirm that JP19 has been set for the appropriate squelch operation. (For details, refer to Table 4-2 on page 4-6.)
- ❑ 2. Adjust the SQUELCH pot slowly clockwise until the CARRIER LED just goes off steady (no further). This control is on the receiver when JP19 is set for external squelch.
- ❑ 3. Use a service monitor to inject a standard test receive carrier at a level of 1 mVRF (-47 dBm) modulated by a 1 kHz sinusoidal audio tone at the desired AUDIO deviation. Adjust the RX AUD pot (R199) on the front panel of the controller to attain 1.0 Vp-p (-6.8 dBm, 354 mV RMS) at the RX AUD test point (TP14). Change the position of jumper JP9 if you cannot reach 1 volt or if R199 is at the end of its adjustment range.
- ❑ 4. Connect the communications service monitor output directly to the receive antenna port of the repeater. With no carrier applied, turn the SQUELCH pot (R200) on the front panel of the controller fully counterclockwise (JP19 = Internal only).

  Verify that the CARRIER LED goes on steady. (The test/normal mode, switch A1, setting is irrelevant.) This prevents false LTR sync pattern decoding as a result of random noise.
- ❑ 5. Use the service monitor to inject a 100 Hz audio sine wave at the system LTR DATA deviation into the repeater receiver.
- ❑ 6. Adjust the RX DATA pot (R201) to obtain ~~1.4 Vp-p~~ 1.0Vpp at the corresponding RX DATA test point (TP16). Table 4-4 shows the approximate potentiometer position for narrow band applications. The wide band setting should be 11:00 o'clock, in the fully clockwise position.

Table 4-4. Narrow-band Settings

LTR Data Deviation (Hz)	Audio Deviation (Hz)	RX DATA Pot (R201)	
500	1500	11:00 o'clock (full clockwise)	
550	1450	10:00	
600	1400	9:00	
650	1375	8:00	
700	1350	7:00	
750	1300	6:30	
800	1275	6:00	
850	1225	5:30	
900	1200	5:00	

- ❑ 7. Reset the controller to normal operating mode (A1 DOWN & soft reset). Reconnect the receive antenna to the repeater.

- ❑ 8. Key up the mobile transceiver previously programmed with the test ID code. The DECODE LED should turn on steady. If the CARRIER LED is on while the mobile is transmitting and the DECODE LED remains off, then check JP15 to verify the correct receive data polarity and JP14 to verify the correct transmit data polarity.

Setting Repeater Interface Levels

Verify the transmitter limiter has been configured for a total system carrier deviation. Refer to the service manual provided by the repeater manufacturer for further details.

Caution

Do NOT overload the service monitor input. Refer to the operation manual provided by the manufacturer

ENCODE 15
AREA 1
GO TO RPTR 01
HOME 1
ID CODE 001
FREE RPTR 31

Transmit Audio Adjustment

Adjust the transmit audio output as follows:

❑ 1. Place the controller into Test Mode by placing switch A1 to the UP position and then holding the SETUP button depressed for 3 seconds. This places the controller into test *mode 1* which sends a 1 kHz sine wave over the channel.

Note:

For details on each of the four test modes, refer to Table 4-1 on page 4-5.

12 K RADIO ↓

❑ 2. Adjust the TX AUD pot (R202) on the front panel of the controller to attain ~~3 kHz~~ 1.8 khz carrier deviation (for wide band applications) while in test *mode 1*. For narrow-band audio deviation, refer to Table 4-4 on page 4-16. Change the position of jumper JP13 if you cannot reach the desired output level.

❑ 3. Press the SETUP button four times to cycle to transmit test *mode 3*. Adjust the TX DATA pot (R203) on the front panel of the controller to attain ~~1 kHz~~ carrier deviation .7 khz (for wide-band applications). For narrow-band audio deviation, refer to Table 4-4 on page 4-16. Change the position of jumper JP11 if you cannot reach the desired output level.

JP10 selects DC or AC coupling of this output to the repeater. The type of signal coupling could adversely affect the operation of the transmitter. AC coupling is normally used, but refer the repeater documentation if problems arise.

❑ 4. Place the controller into normal mode by placing switch A1 to the DOWN position and then holding the SETUP button depressed for 3 seconds. The controller exits the test mode and returns to normal operation.

This concludes dispatch operation adjustments. For details on interconnect adjustments, refer to Section 5.

STEP 5. CONNECTING TRUNKING CONTROLLERS

The Model 452 and 459 use a single connection between control units. The control bus is the only link necessary between controllers at the site. Zetron provides one control bus cable with each controller.

Follow the steps below to connect the control units.

❑ 1. Plug one end of the supplied cable into the modular connector labeled "CONTROL BUS" on the rear of the first control unit. Either control bus connector can be used.

- ❑ 2. Plug the other end of the cable into the control bus of the second control unit. Again, either connector will work.
- ❑ 3. Plug one end of another cable into the unused control bus of the second unit.
- ❑ 4. Plug the other end of the cable into the control bus of the third control unit.
- ❑ 5. Repeat steps #3 and #4 until all control units are connected to at least one other controller in a daisy chain fashion. One control cable should be left over.

Figure 4-7 illustrates the control bus connections between M452/459 controllers.

> ☞ **Note:**
>
> **Do NOT connect the last controller to the first in the sequence!**

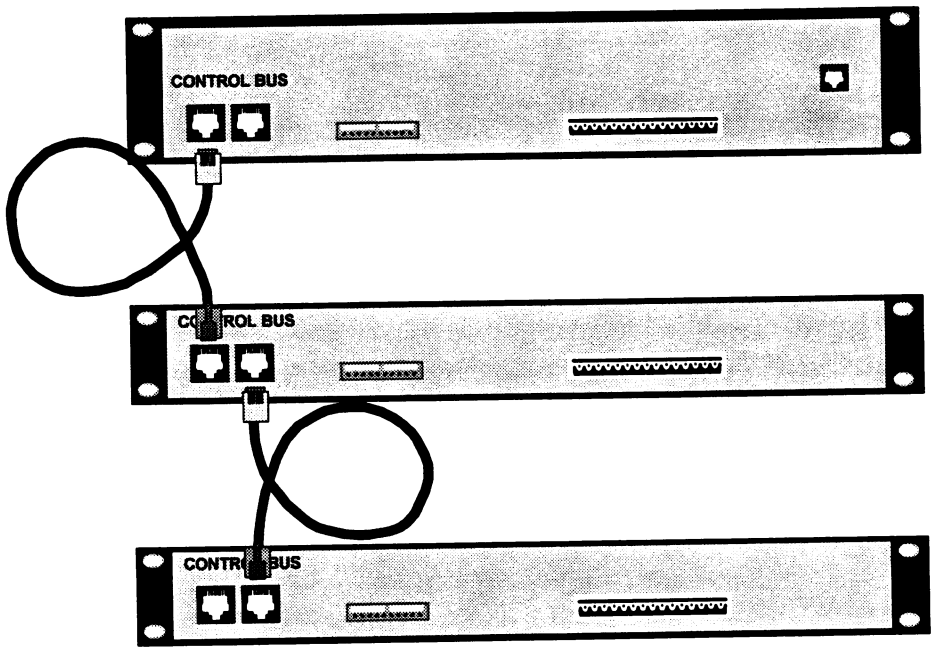

Figure 4-7. Control Bus Connections

STEP 6. TESTING DISPATCH CALLS

Before continuing on with interconnect installation, it is a good idea to perform some preliminary tests. It is easier to troubleshoot connections without the added factors of telephone lines.

Single Channel Dispatch

Following a hard reset, the controller validates all user IDs for dispatch calls. (The firmware default setting for "unassigned" users is valid.) This allows you to test dispatch calling without having to load a database into the system.

Note:

If the TCBase Site Configuration is programmed to invalidate unassigned users, and the Site Configuration has been loaded into the site, some additional programming is required to test dispatch operation.

At least two specific dispatch IDs must be entered, validated and downloaded to the site for the following procedure. For specific details on database programming, refer to the TCBase operation manual (Part No. 025-9451).

Follow the steps below to test dispatch operation.

- ❑ 1. Program two mobiles with the same user ID for dispatch calling.
- ❑ 2. Key up the first mobile. Do not release PTT.

  The CARRIER, DECODE and TRANSMIT LEDs on the home controller front panel should illuminate in response.
- ❑ 3. While the mobile is keyed, speak into the microphone.

  Your voice should be audible through the speaker on the second mobile.

Dispatch Trunking

Follow the steps below to test dispatch trunking between controllers.

- ❑ 1. Program two mobiles with unique user IDs homed on the same channel. For example, 01-001 and 01-002. Both should be setup for dispatch calling.
- ❑ 2. Repeat the dispatch test for the second mobile.

  Verify that both units home on the same channel (01 in the example).
- ❑ 3. Key up the first mobile. Do not release PTT.

  The CARRIER, DECODE and TRANSMIT LEDs on the home controller front panel should illuminate in response.
- ❑ 4. While the first mobile is still keyed, key up the second mobile unit. Do not release PTT.

  The CARRIER, DECODE and TRANSMIT LEDs on another controller should illuminate in response. This indicates that the second mobile has been trunked to the alternate channel.
- ❑ 5. While the second mobile is still keyed, release PTT on the first mobile unit.

  The second unit should still be transmitting on the alternate (trunked-to) channel, and the home repeater should continue to send GOTO packets to the second mobile.

❑ 6. Release PTT on the second mobile unit.

Both repeaters should now return to idle status.

Note:

For installation procedures pertaining to Model 459 interconnect or cross-busy applications, see Section 5.

STEP 7. PROGRAMMING SITES, REPEATERS AND USERS

To finish installing the system all of the site, repeater and user information needs to be programmed. Use the TCBase Manual to assist with programming.

Note:

For complete details on the system database, refer to TCBase operation manual (Part No. 025-9451).

Some of the advanced operating features of the controller use a built-in clock chip that keeps track of the time and date information. These features include deferred access during non-prime time, air time accumulation during prime and non-prime time, repeater loading statistics by the hour, all repeaters busy statistics by the hour, and telephone call detail record storage.

The clock chip is built into the socket underneath memory chip U24 and keeps time even during power failures. Set the clock by selecting "Other" from the Comm menu in TCBase. When the detailed Other menu comes up, select "Set Date & Time."

TCBase connects to the selected site and accepts the time and date information in real time. Set the clock for the site's local time, depending on time zone. Keep in mind that this may differ from the time at the office.

Note:

The time and date are automatically cloned to all Zetron units at the site which are connected to the control bus. Additionally, the master controller resets all the slaves at midnight daily to ensure consistent clock synchronization between repeater controllers for billing purposes.

STEP 8. RECORDING CONFIGURATION DETAILS

The last step of installing the system is perhaps the most critical. A small amount of time invested in documentation now can save many hours of frustration later. Fill in the missing details on each of the worksheets in Section 8. These pages provide handy reference data about your system configuration.

The worksheets include general configuration information, all potentiometer settings, the DIP switch positions and the jumper positions.

Final Check

Before you leave the repeater site, turn around and take one last look at the Model 452 and Model 459 front panel LEDs.

On the repeater and subscriber bus master unit (DIP switch B1=UP on the left-position of bank of 8), the POLL LED should be almost steady. Some flashing may be detectable on the slave units (DIP switch B1=DOWN), the POLL LED should flash briefly in response to the master.

5. TELCO AND CROSS-BUSY INSTALLATION 5-1

TELEPHONE INTERFACE INSTALLATION 5-1
Installation Checklist 5-1
Step 1. Setting the Telco Jumpers 5-2
E&M Card Jumpers 5-3
Step 2. Making Telco Connections 5-4
Step 3. Adjust the Telco Interface 5-6
Hybrid Balance 5-7
From Telco Level 5-7
To Telco Level 5-7
Step 4. Testing Interconnect Calls 5-8
Step 5. Finish Programming 5-8
INTERCONNECT OPTION 5-9
Upgrading a Dispatch Unit 5-9
VOICE PROMPTS OPTION 5-9
Installing the Voice Prompts Card 5-9
Updating TCBase 5-10
Recording Voice Prompts 5-11
Customizable Messages 5-11
Programming Commands 5-12
Progress Tones 5-13
Examples 5-13
Adjusting the Audio Level 5-13
DIAL CLICK OPTION 5-14
Installing the Dial Click Card 5-14
Updating TCBase 5-15
Adjusting the Click Decoder 5-15
REPEATER SHARING OR CROSS-BUSY INSTALLATION 5-15
System Requirements 5-15
Cross-Busy Conditions 5-16
Connecting to a Shared Repeater 5-16
Database Programming 5-17

5. TELCO AND CROSS-BUSY INSTALLATION

TELEPHONE INTERFACE INSTALLATION

Caution

This equipment generates, uses, and can radiate radio frequency energy. If it is not installed and used in accordance with the instruction manual, it may cause interference to radio communications. Installation should be accomplished by personnel with experience in radio trunking systems. Specialized knowledge in telephone systems is also important when interconnecting with telco or microwave networks.

The Model 459 Controller should be adjusted and tested as an LTR controller prior to installing the telephone interface covered in this section. The location of the test points and adjustment potentiometers used in these installations are shown in Section 4.

Caution

To protect this equipment against high voltage surges induced by lightning, care must be taken to observe proper grounding practices for both the radio and telephone transmission systems. The equipment warranty does not cover damage due to inadequate surge protection.

Zetron recommends use of *additional lightning protection equipment* such as Zetron's DeadBolt Lightning Arrestor to increase security against unwanted downtime and improve system reliability in harsh environments.

Personnel with experience in radio-telephone equipment should perform the system installation.

Installation Checklist

Start with the unit in your shop and complete the following steps. Please read through the checklist to get an idea of what the installation consists of, before beginning the procedure. Each step is described in further detail later in this section.

Step 1. Set telco configuration jumpers (see page 5-2).

Step 2. Make telco connections (see page 5-4).

Step 3. Adjust telco interface (see page 5-6).

Step 4. Test interconnect (see page 5-8).

Step 5. Return to of Section 4 (step #7) to program users and time.

Once the system is operating well in your shop, record the equipment settings and any pertinent notes on the worksheets provided in Appendix A. Keep these worksheets for reference, as they will ease future installation of additional Zetron units.

Step 1. Setting the Telco Jumpers

Two jumpers on the main board are set based upon the type of telephone interface that is installed in the Model 459. JP4 and JP5 must be set in position A for the end-to-end telco board and must be set in position B for the E&M telco board. Table 5-1 describes the Model 459 main board jumpers that pertain to telco functions.

Note:

For an illustration of the main board jumpers, refer to Section 4.

Table 5-1. Model 459 Telco Jumper Settings

Label	Jumper Name	Position A	Position B
JP5	Telco type input (*Model 459 only*) Set this jumper to match the type of telephone interface card installed in the controller.	End-to-end	E & M
JP6	Telco type output (*Model 459 only*) Set this jumper to match the type of telephone interface card installed in the controller.	End-to-end	E & M

Note:

The end-to-end telco board (Part No. 702-9999) has no jumpers.

E&M Card Jumpers

The E&M telco board (Part No. 702-0001) jumpers are illustrated in Figure 5-1.

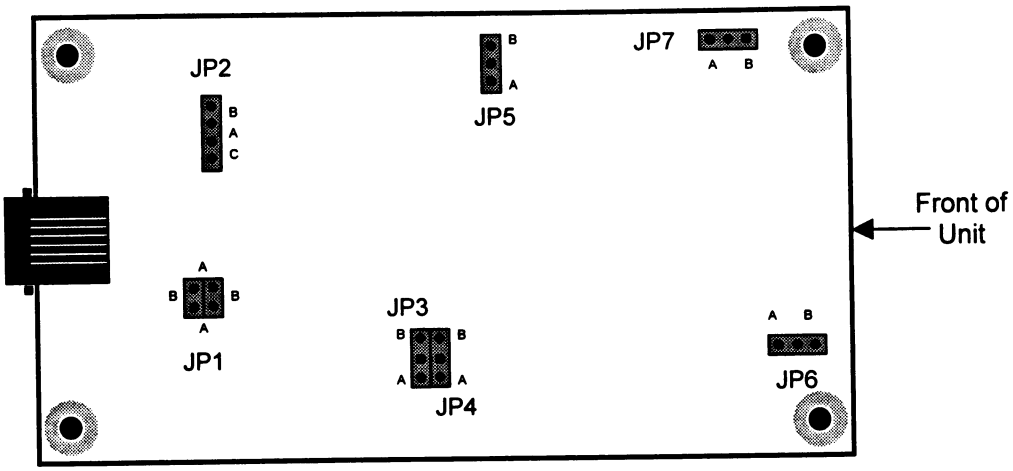

Figure 5-1. E&M Card Jumpers

To set JP1 to position AA, place the jumpers so they are perpendicular to the front of the unit. Viewed from the front of the unit, JP1 in position AA looks like:

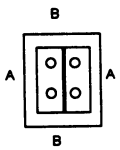

To set JP1 to position BB, place the jumpers so they are parallel to the front of the unit. Viewed from the front of the unit, JP1 in position BB looks like:

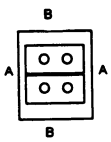

Use the descriptions in Table 5-2 to ensure proper configuration of the E&M jumpers.

Table 5-2. E&M Telco Card Jumpers

Label	Jumper Description	Position A	Position B	Position C
JP1	Select supervision leads	E = sense M = control *	M = sense E = control **	
JP2	Selects incoming off-hook condition for sense lead	-48 V	ground	µwave ± 5-12 V
JP3	Selects control relay contact closure	normally open (NO)	normally closed (NC)	
JP4	Not used			
JP5	Selects outgoing off-hook condition for control lead	ground	-48 V	
JP6	Selects from telco audio level	µwave / low -4 dBm max	telco / high -18 dBm max	
JP7	Selects to telco audio level	telco / low -16 dBm max	µwave / high +4 dBm max	

* Also referred to as Position AA.

** Also referred to as Position BB:

Step 2. Making Telco Connections

The telephone interface consists of a single RJ-11 modular port on the rear of each Model 459 controller. Figure 5-2 illustrates the connection.

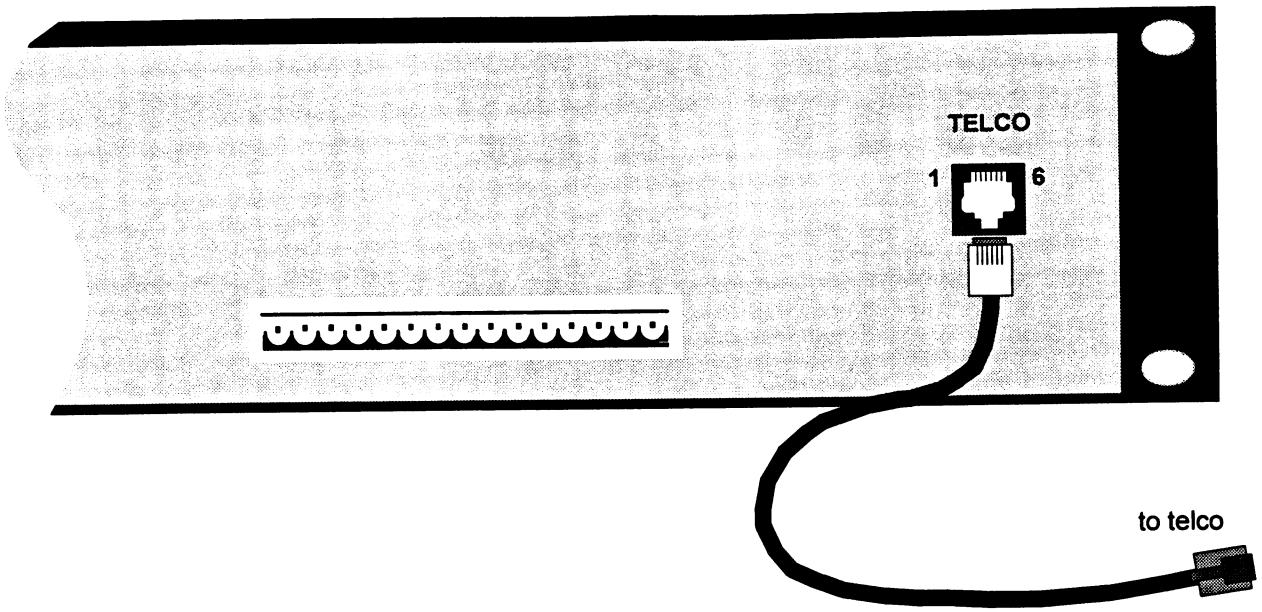

Figure 5-2. Model 459 Telco Connections

> **Note:**
>
> **Before making end-to-end telco connections, find out if the phone line uses ground start or loop start supervision. Ground start is preferable, as it informs the Model 459 when the landline party disconnects, thereby speeding up call processing.**

Follow the steps below to interconnect each controller.

- ❑ 1. Obtain or construct a cable to make the appropriate telco connection. Figure 5-3 describes the pin configuration for end-to-end and E&M telco cards. (The type of telco interface should have been indicated on the sales order.)

  The controller end of the cable requires a 6-pin RJ-style modular plug. The other end of the cable should connect to a telephone punch-down block, a wall jack, or a μwave link depending on the application.

- ❑ 2. Plug the modular connector into the telco port on the rear of the Model 459.

- ❑ 3. Make the appropriate connections at the other end of the cable.

Pin #	End-to-End Card	E&M Card
1	*not used*	E (ear) lead
2	*not used*	TIP to telco
3	RING	RING from telco
4	TIP	TIP from telco
5	*not used*	RING to telco
6	*not used*	M (mouth) lead

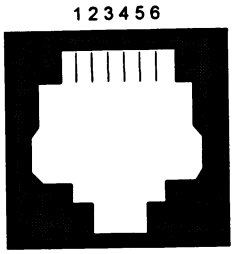

Figure 5-3. Telco Interface Signals

❑ 4. Repeat steps #1-3 for each interconnect controller at the site.

Step 3. Adjust the Telco Interface

The following preliminary adjustments apply only to interconnect functions of the Model 459 controller. The end-to-end and E&M telephone interfaces require unique setup procedures. The end-to-end hybrid balance is obtained by sending high and low frequency tones through the telephone interconnect while adjusting each of the controls on the telco card.

The E&M telephone interface can be configured for telephone or for microwave connections and use the FROM TELCO and TO TELCO potentiometers located on the front panel of the Model 459.

Figure 5-4 illustrates the front view of an end-to-end telco card. Each component used in the adjustment procedures is labeled for easy identification.

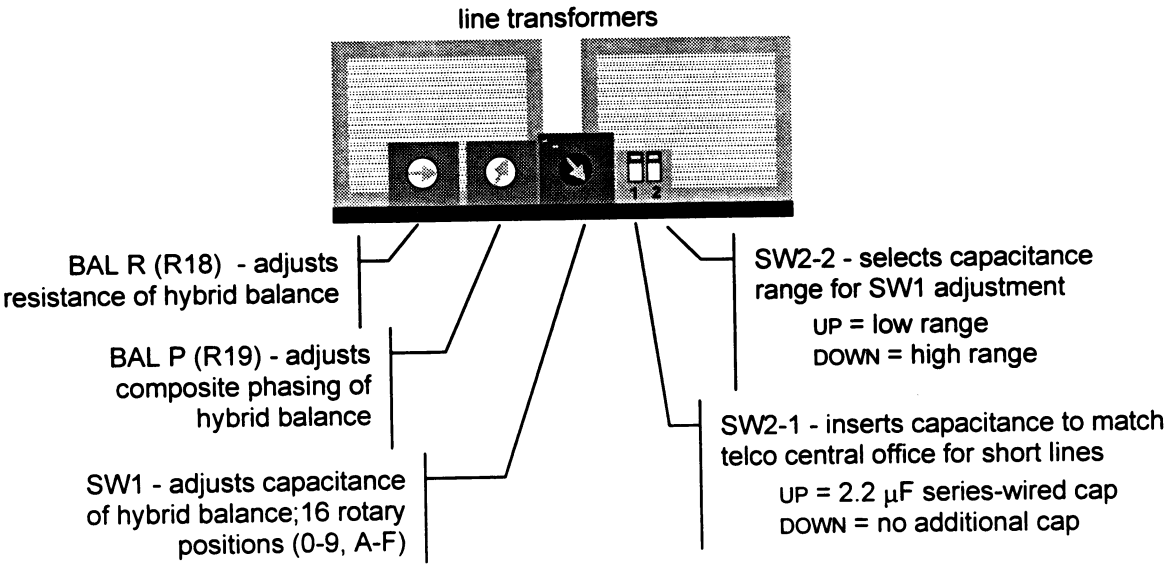

Figure 5-4. End-to-End Telco Card

Hybrid Balance

The hybrid adjustment applies to 2-wire end-to-end interfaces only. Follow the steps below to balance the hybrid:

- ❑ 1. Dial into the Model 459 from the landline while the controller is in Test Mode (A1 UP & soft reset). For details on transmit test modes, refer to Section 4. Upon answering the telco line, the controller continuously sends 400 Hz and 2500 Hz tones out the telephone line simultaneously and opens the audio path from the telephone out over the radio channel.

- ❑ 2. Monitor the FROM TELCO test point (TP12) while the controller is in this telco test mode. An oscilloscope is strongly recommended for this procedure.

  The FROM TELCO and TO TELCO potentiometers are **not** used with the End to End Telephone Interface.

- ❑ 3. Adjust all pots and switches on the telco card for minimum signal level at TP12. Typically, 60 mVp-p (20 mVrms) or less can be attained.

From Telco Level

The from telco adjustment is required for E&M 4-wire interfaces only. Follow the steps below to set the from telco level:

- ❑ 1. Using a balanced 600 ohm tone generator connected to pins 3 and 4 of J1 of the E&M Telco card, inject a 1kHz test tone signal onto the telco line at test-tone level 0 dBm.

- ❑ 2. Adjust the FROM TELCO pot (R197) on the front panel of the Model 459 to attain an audio level of 200 mV p-p (71mVrms) at test point TP12 (from Telco).

- ❑ 3. Remove the tone generator from the telco line.

To Telco Level

The "To Telco" adjustment is required for E&M 4-wire interfaces only. Follow the steps below to set the "To Telco" level:

- ❑ 1. Turn the TO TELCO pot (R198) fully counter-clockwise to avoid overdriving the telephone line.

- ❑ 2. Dial into the Model 459 from the landline while the controller is in Test Mode (A1 UP & soft reset). For details on transmit test modes, refer to Section 4. Upon answering the telco line, the controller continuously sends 400 Hz and 2500 Hz tones out the telephone line simultaneously and opens the audio path from the telephone out over the radio channel.

- ❑ 3. Adjust the TO TELCO pot (R198) on the front panel of the controller to attain 2.1 Vp-p (740 mVrms) at TP13 (to telco).
- ❑ 4. Monitor the to telco audio pair and set as required for the specific trunk. Observe the following:
    - The audio transmitted to telco should **not** be distorted.
    - Observe for more than 3 seconds, the telco power limiter circuit should not activate (i.e. the amplitude should not decrease).
- ❑ 5. The to telco adjustment is now complete, hangup the line, and return the controller to normal operating mode. (A1 DOWN & soft reset).

Step 4. Testing Interconnect Calls

Follow the steps below to test the telco interface.

- ❑ 1. Program a mobile with a unique user ID designated as interconnect homed on the Model 459 you have just finished adjusting.
- ❑ 2. Program basic Site and Repeater Configuration data in TCBase. For interconnect operation, in the Site Configuration set the Interconnect field to 'Y'. In the Repeater Configuration for the appropriate channel set the Telco Line Type field to either E or M depending on the type of line installed in that channel. Also, set the incoming and outgoing calls allowed fields to 'Y'.

> ☞ **Note:**
>
> **For programming details, refer to the TCBase operation manual (Part No. 025-9451).**

- ❑ 3. Key up the mobile, once the mobile has accessed the system the CARRIER, DECODE, TRANSMIT and TELCO LEDs on the home controller front panel should illuminate in response.
- ❑ 4. Release PTT, and listen for dialtone, once dialtone is heard press PTT and enter the number you would like to dial and release PTT
- ❑ 5. The Model 459 should regenerate the dialed number and a phone connection should be made.

Step 5. Finish Programming

To finish installing the system all of the site, repeater and user information needs to be programmed. Return to Section 4, step 7 in this manual to complete the installation process.

INTERCONNECT OPTION

This option package provides interconnect service in the Model 459 between the radio repeater system and a telephone, RF, or microwave system. It enables specified mobile users to place and receive calls from landline. TCBase defines capabilities for each repeater like interconnect, incoming, and outgoing calling privileges, and user classes.

The Model 459 can be equipped with one of two different types of telco interface - end-to-end or E&M. Each card is required for specific applications and telephone line types.

Upgrading a Dispatch Unit

When the Interconnect Option is added to a dispatch Model 459, the following updates are required:

- Plug the telco interface card into the Model 459.
- Connect to the telco or microwave line.
- Adjust the telephone levels and hybrid balance.
- Program TCBase with the changes.

Note:

Be sure to program TCBase for interconnect operation before attempting a test call.

VOICE PROMPTS OPTION

The voice prompt board is optional for the Model 459 Trunking Controller.

Note:

For complete details on the voice prompts option, see the TCBase operation manual (Part No. 025-9451).

Installing the Voice Prompts Card

Follow the steps below to install a voice prompt card (Part No. 702-9391) into the Model 459 controller.

- ❑ 1. Ensure that power has been removed from the Model 459.
- ❑ 2. Remove the top cover of the controller, if applicable.

❑ 3. Plug the voice prompt card into the 6-pin female connector (J6 and J7) on the Model 459 main board. Ensure that the card extends toward the rear of the unit with the connector closest to the front panel.

Figure 5-5 illustrates the location of the voice prompt card and the associated connector (P2). Although the main board has a 12-pin interface, only 10 of the signals are active. The voice prompt connector should be placed to the right over the female port, leaving two unused slots on the left.

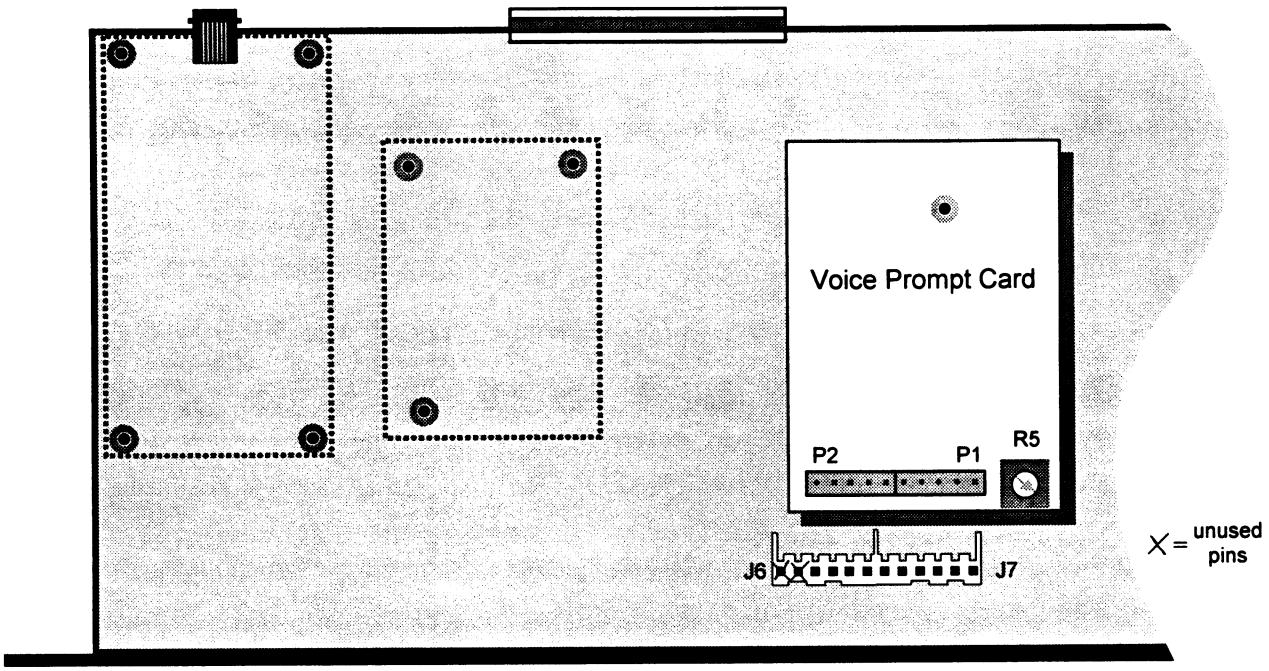

Figure 5-5. Voice Prompt Card Installation

❑ 4. Verify that all the pins are inserted properly into the correct slot on the connector.

❑ 5. Secure the card to the standoff using the screw provided.

Updating TCBase

Once the new voice prompt card has been installed in the controller, the feature must be enabled in the database. Edit the Repeater Configuration for the applicable controller to activate voice prompts.

Note:

For complete details on database programming of the voice prompts option, see the TCBase operation manual (Part No. 025-9451).

Recording Voice Prompts

Follow the steps below to gain access to voice prompt programming mode. Keep in mind that some of the steps vary, depending on the type of interconnect.

- ❑ 1. Call into the Model 459 equipped with the voice prompts option from a landline telephone.
- ❑ 2. Initiate a programming session as applicable.
  - *a. End-to-end telco card, or E&M telco card emulating end-to-end* - wait for the prompt.
  - *b. E&M card emulating DID, or overdial access enabled* - dial any invalid phone number, and wait for reorder tones.
- ❑ 3. Enter the DTMF sequence of "00" followed by the test ID (programmed into TCBase).
- ❑ 4. The controller responds with two ding-dongs, indicating programming mode has been activated. The unit expects voice prompt programming commands to follow.

Customizable Messages

The voice prompt card includes 11 user-programmable messages. The descriptions that follow include typical wording, but each message can be customized to meet the unique needs of the system.

Table 5-3 summarizes each voice prompt and its applications.

Table 5-3. Voice Prompt Chart

No.	Voice Prompt	Description
1	Welcome	Plays after the line is answered. Experienced users who do not want to wait through the entire recording can overdial DTMF during the welcome message. Dial click detection is not enabled until the message is done playing, so rotary phone users must wait. If this message is not recorded, the beep or dial tone prompt is played immediately.
2	Call cannot be completed	Plays if the mobile unit does not answer the call before the timeout expires. The lines is automatically disconnected after the message plays. If this message is not recorded, reorder tones are played (fast busy signal).
3	Thank you	Plays after a valid mobile ID is entered. If this message is not recorded, the Model 459 goes directly to ringing.

Table 5-3. Voice Prompt Chart (continued)

No.	Voice Prompt	Description
4	Call processing, please wait	Plays during redial of a PTC Autonet or autodial call. If this message is not recorded, two short beeps are played.
5	Invalid user or restricted number dialed.	Plays after two invalid mobile IDs have been entered (message #6 below), or a restricted number was dialed on an outgoing call. If this message is not recorded, reorder tones are played.
6	Invalid number, please retry	Plays if an invalid mobile ID is entered. (A user that is not programmed into the database.) If a second invalid number is entered, message #5 above plays.
7	Please proceed	Plays after the call is connected to an Autonet mobile, to notify the caller to begin conversation.
8	Alarm on repeater	Plays to the designated mobile when an alarm condition has occurred. This feature must be enabled in TCBase.
9	Thanks for registering	Plays when a mobile user, homed on another site, roams into a Model 459 FASTNet site and is successfully registered on the system.
10	Call is Disconnecting	Plays before a call terminates.
11	Busy System or User	Plays when the user ID being called is already busy or the system has no available channel.

Programming Commands

Once voice prompt programming mode has been activated, the following commands are available:

0	erase message
2	play message
9	record message
*	stop recording message
# #	terminate programming call

Note:

The record command actually executes two different commands - erase the old message, and then record a new message.

The erase, play, and record commands are two part entries - enter the command + the message number (see Table 5-3).

Progress Tones

During voice prompt programming, the Model 459 plays distinct tones to help guide you through the process. Each tone identifies what action the controller is taking or what input is expected next.

6 beeps	Plays to indicate message recording has begun.
8 beeps	Plays to indicate a message is being erased.
fast busy	Plays if too much time has passed since the last command. The controller hangs up the line following this prompt.
ding-dong	Plays to confirm that a message has been erased or that the maximum message length has been recorded.
2 ding-dongs	Plays when programming mode is first activated.
3 ding-dongs	Plays in response to an invalid command or message number.

Examples

For example, to play the "thank you" message, the appropriate command sequence is:

2 3

The controller responds by playing the "thank you" message, if one has been recorded.

Similarly, to record a new "thank you" message, the command sequence is:

9 3

The controller responds by playing 6 beeps to indicate when to record the voice message. Speak the appropriate message and then press * to stop recording.

If the controller plays a ding-dong before the entire voice message has been spoken, recording has terminated. Rerecord the message, this time speaking faster or cutting out any unnecessary words.

Adjusting the Audio Level

Once the new voice prompts have been recorded, the audio level requires some adjustment. Dial into the controller from a landline telephone and enter an invalid mobile ID.

While message #5 is playing, adjust R5 on the voice prompt card to match the audio level with the interconnect audio. (See Figure 5-5 for the pot location.) The volume should be loud enough to clearly understand the message, without overpowering the callers.

DIAL CLICK OPTION

The dial click decoder option (Part No. 702-9242) enables the controller to process numbers dialed by rotary telephones. Dial *clicks* are distinctly different from dial *pulses*. The Model 459 decodes dial pulses without the optional dial click decoder card.

Installing the Dial Click Card

Follow the steps below to install a dial click decoder card into the controller:

- ❑ 1. Ensure that power has been removed from the Model 459.
- ❑ 2. Remove the top cover of the controller, if applicable.
- ❑ 3. Plug the dial click card into the 6-pin female connector (J5) on the Model 459 main board. Ensure that the card extends toward the front of the unit with the connector closest to the rear panel.

  Figure 5-6 illustrates the location of the dial click card and the associated connector. Although the dial click card has a 10-pin interface, only 6 of the signals are active. The connector should be centered over the female port on the main board, leaving 2 pins on either side unused.

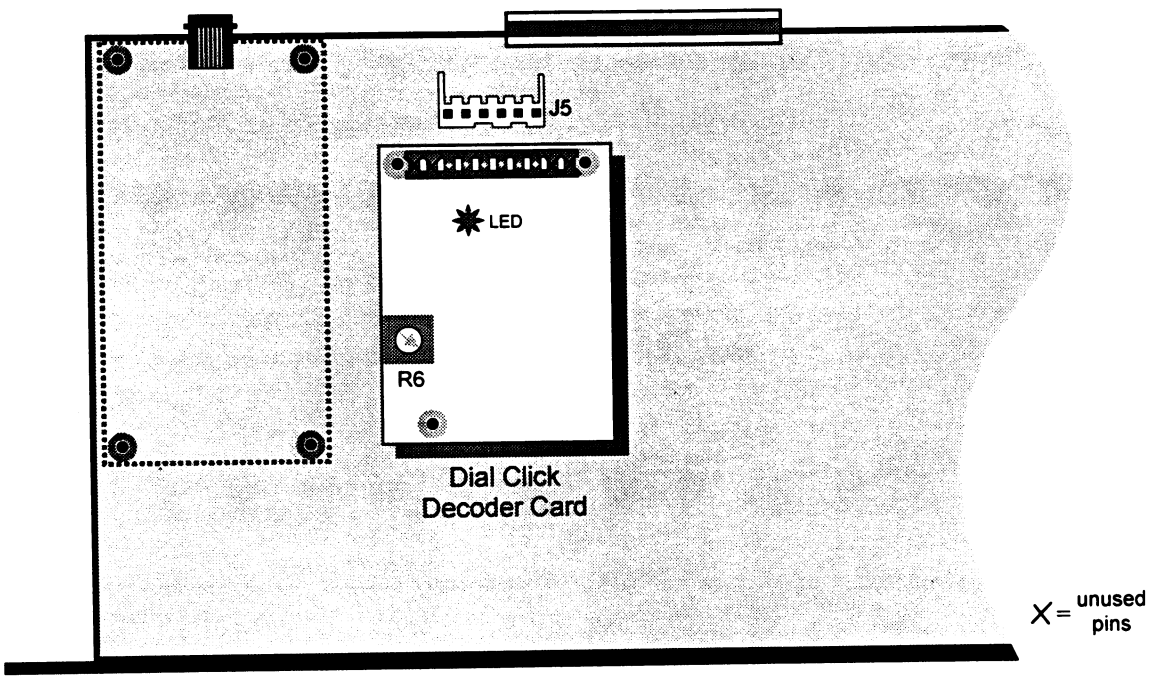

Figure 5-6. Dial Click Decoder Card Installation

- ❑ 4. Verify that all the pins are inserted properly into the correct slot on the connector.
- ❑ 5. Secure the card to the standoffs using the screws provided.

Updating TCBase

Once the new dial click card has been installed in the controller, the feature must be enabled in the database. Edit the Repeater Configuration for the applicable controller to activate the desired dial click decoding mode.

Adjusting the Click Decoder

Follow the steps below to adjust the card to decode dial click numbers properly:

- ❑ 1. Call into the Model 459 from a landline rotary telephone.
- ❑ 2. Start dialing digits while adjusting the pot (R6) on the dial click card. See Figure 5-6 for the exact location of the pot.

  Begin the adjustment from the fully counter-clockwise position and rotate the pot slowly clockwise. At the optimum setting, the red light on the card blinks consistently with each dial click (two blinks for every click).
- ❑ 3. Place another call into the Model 459 from a landline rotary telephone and verify the digits are decoded as expected. If not, select another dial click mode and repeat the process.

REPEATER SHARING OR CROSS-BUSY INSTALLATION

The Model 452 and Model 459 include built-in cross-busy capability. This feature enables the controller to share a repeater with a convention controller and to share the radio channel with other conventional users.

System Requirements

Several prerequisites must be met before a conventional controller can be added to the trunking system. Verify the following, before setting up repeater sharing:

1) Separate telephone lines must be provided to each controller sharing a repeater. (Sharing of a common phone line between the terminals is not done. Which controller would answer an incoming call?).

2) Conventional sub-audible digital channel guard (DCG/DPL) has not been tested for compatibility. The controller may false, thinking an LTR mobile is attempting access to the system. In addition, some CTCSS tones may also cause false LTR data codes.

3) No Model 459 LTR IDs can be homed on the shared channel. This channel is only available for trunking radios to when their home channel is busy and the conventional controller is not using this channel.

Cross-Busy Conditions

Three unique conditions can cause the controller to enter cross-busy state:

- request to transmit from the connected conventional controller
- COR without valid LTR data packets
- busy condition on the transmit frequency monitor input

In the cross-busy state, the Model 452 or Model 459 ignores any incoming LTR data and does not transmit any LTR data over the channel.

Connecting to a Shared Repeater

The aux interface connector on the rear of the Model 452/459 controller simplifies cross-busy installation. Figure 5-7 illustrates the interface and describes each signal.

AUX INTERFACE (J2)

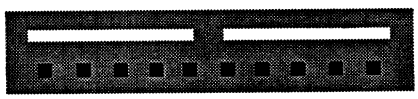

1 10

Pin #	Signal	Pin #	Signal
1	PWR OUT	6	GROUND
2	PWR GND	7	PTT IN
3	DISC OUT	8	BUSY OUT
4	GROUND	9	COR OUT
5	TX IN	10	SUB IN

Figure 5-7. Auxiliary (Cross-Busy) Interface

Figure 5-8 illustrates the wiring between controllers and the shared repeater. The M452/459 is wired directly to the repeater and the conventional controller is wired to the Aux Interface connector on the M452/459 controller. The discriminator audio and COR output from the repeater are internally connected to J2 in order to maintain separate cables in the installation. The transmit audio, and transmit sub-audible outputs from the conventional unit are connected to the repeater whenever the M452/459 grants control to that controller.

Separate cables allow easy transition from a conventional channel into a shared channel. Simply disconnect the repeater from the conventional controller and then connect the repeater and controller separately to the Model 452 or Model 459 LTR controller. The conventional controller does not require readjustment after installing the Zetron controller, because there is no interaction between the transmitter audio paths and the input impedance for the discriminator audio is high.

When both controllers are powered by 12 V_{DC} power from the repeater, the M452/459 simplifies the wiring by a heavy connection between pin 1 of the Radio Interface connector

and pin 1 of the Aux Interface connector (see Figure 4-1). Since the Zetron controller can also be powered by low voltage AC, the conventional controller would require separate wiring to receive it's power when AC is used for the LTR controller.

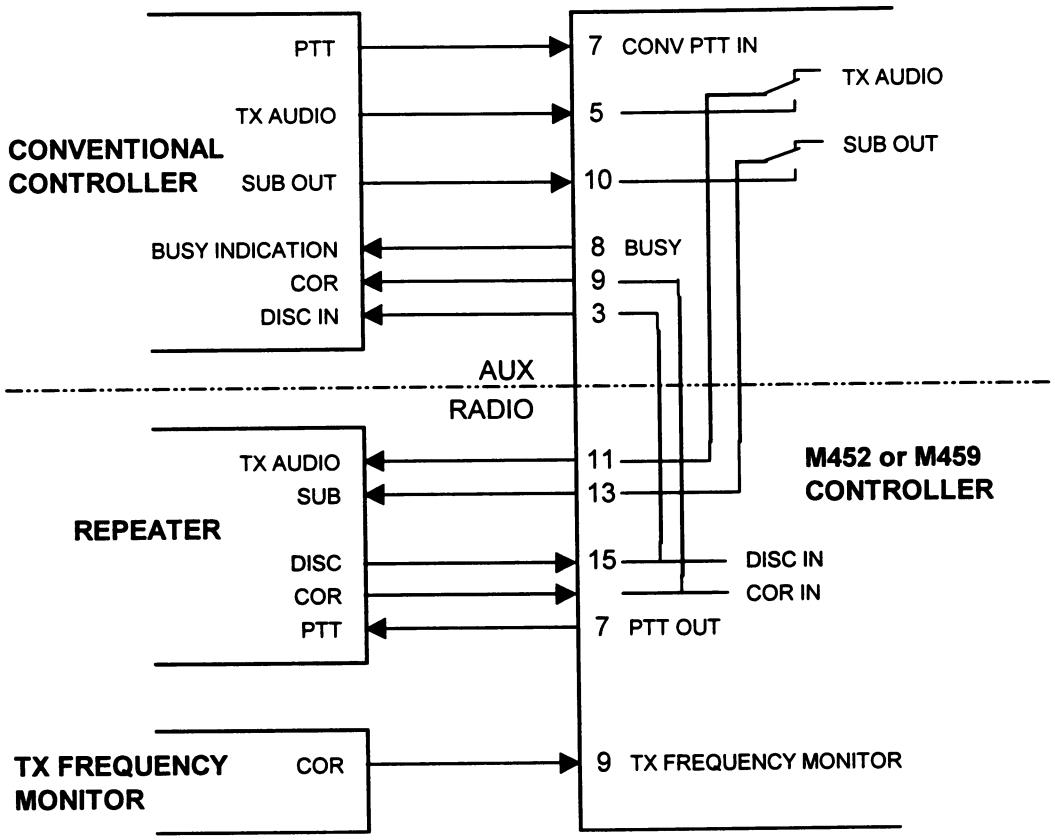

Figure 5-8. Shared Repeater Connections

The discriminator input and COR threshold levels need to be adjusted as a system, since both controllers place an electrical load on the signals.

Database Programming

To keep calls flowing smoothly, make sure to set the Repeater Hold Time on each control terminal between 2 and 5 seconds. Ideally, this value should be long enough so that a pair of mobiles can have the channel for the duration of a "back and forth" dispatch call. If the Repeater Hold Time is too short, one controller may drop the channel and the other controller grab it between the PTTs of two mobile parties who are conversing.

If you have more than one repeater that you wish to share between Model 459s or Model 452s and conventional controllers, trunking becomes tricky. LTR mobiles that are homed on the controllers return there for trunking instructions. If the conventional controller has the channel tied up, the LTR mobiles are stuck and do not trunk. Therefore, to make trunking work, ***home all LTR mobiles onto controllers that have free access to their repeaters*** (not shared). Other controllers can share repeaters and be used as "trunk to" channels; just avoid homing any mobiles there.

6. EXPANDED INSTALLATION INFORMATION 6-1

CONTROLLER ADJUSTMENTS 6-1
Carrier Deviation 6-1
TELCO ADJUSTMENTS 6-2
Hybrid Balance 6-2
From Telco Adjustments 6-3
Dial Tone Method 6-4
DTMF Method 6-4
To Telco Adjustment 6-4
PROGRAMMING USERS 6-4
Repeater Timing 6-5
Keyup Delay 6-5
COR Hold Time 6-5
Repeater Hold Time 6-6
Repeater Timeout 6-6
COR Mute Time 6-6
Packet Loss Time 6-6
FIELD UPDATES 6-6
Identifying PROMs 6-7
Updating TCBase 6-9
Installing New Software 6-9

6. EXPANDED INSTALLATION INFORMATION

The installation and adjustments have been covered in Sections 4 and 5. This section expands step 4 of Section 4 and provides additional information about field updates.

Both Model 452 and 459 are built from the same printed circuit board. This translates into identical setup and adjustment procedures for both units. The Model 459 has some extra jumpers, test points and controls for the telephone interface, voice prompt and dial click options boards and two additional front panel LEDs that do not exist on the Model 452.

CONTROLLER ADJUSTMENTS

Follow the steps given in steps 1 through 3 of Section 4 to configure the Model 452 or Model 459 controller for your specific application. Refer to the installation portion of step 4 of Section 4 to connect the controller to the repeater.

The Model 452 and 459 LTR Trunking Controllers perform reliably only after the signaling levels of the repeater are properly aligned. The following procedure was not included in step 4 of Section 4 to simplify those instructions. This procedure tests the transmitter limiter for correct operation prior to adjusting the controller audio and LTR data outputs to the repeater transmitter.

Carrier Deviation

The transmitter exciter and receiver sections of the repeater must be properly aligned per manufacturer specifications before the mobile transceiver can communicate with the Radio Frequency (RF) components of the trunking system. When aligning the receiver, be sure to align the discriminator balance to prevent LTR data degradation. Refer to the service manual provided by the repeater manufacturer.

Configure the transmitter limiter for a total system carrier deviation (5 kHz for wide band operation or 2.5 kHz for narrow band operation) as follows:

❑ 1. Examine the transmitter output with the communications service monitor.

Caution

Do NOT overload the service monitor input. Refer to the operation manual provided by the manufacturer

❑ 2. Temporarily disconnect the TX AUDIO wire from J1 (radio interface) on the rear of the controller. Loosen the screw in the 15-pin connector at pin 11 and remove the wire (blue for generic cable, Part No. 709-7116).

❑ 3. Place the controller into test mode by setting switch A1 to the UP position. Press and hold the SETUP switch until the front panel LEDs flash, then release the SETUP switch to perform a soft reset.

The TRANSMIT LED should illuminate immediately and remain lit. SYNC and POLL may illuminate later.

❑ 4. Adjust the TX DATA pot (R203) on the front panel of the controller to the desired carrier deviation (1 kHz for wide band or from Table 4-4 for narrow band operation).

❑ 5. Inject a 1 kHz sine wave tone to the TX AUDIO input of the repeater (blue wire) using the audio tone generator.

Note

DC coupling may cause unwanted carrier deviation.

❑ 6. Increase the generator output level until limiting begins, while measuring the transmitter modulation with the service monitor. The deviation should be approximately 3.5 kHz of audio modulation + 1 kHz LTR data modulation, for a total channel deviation of approximately 4.5 kHz (for wide band operation).

The total channel deviation should be 2.3 kHz for narrow band operation.

❑ 7. Increase the audio generator output to at least double the previous level, ensuring hard-limiting operation. Verify that total deviation does not exceed 5 kHz for wide band or 2.5 kHz for narrow band operation. Realign as required.

TELCO ADJUSTMENTS

In the following procedures, you will first set the hybrid using the internal tone generator, then set the to and from telco levels for proper modem operation, and finally repeat the hybrid adjustment. If an E&M Type I 4-wire telco card is used, no hybrid circuitry needs to be balanced. Skip ahead to "From Telco Adjustments" on page 6-3.

Hybrid Balance

Follow the steps below to balance the hybrids on an end-to-end telco card:

❑ 1. Connect a telephone line to the controller.

❑ 2. Dial into the Model 459 from the landline while the controller is in Test Mode (A1 UP & soft reset). For details on transmit test modes, refer to Section 4. Upon answering the telco line, the controller continuously sends 400 Hz and 2500 Hz tones out the telephone line simultaneously and opens the audio path from the telephone out over the radio channel.

- ❑ 3. Along the front edge of the end-to-end telco card, there are two variable resistors, one sixteen position rotary switch, and one DIP switch as illustrated previously in Figure 5-4.

  Adjust the telco card to the following settings:

  a. R19 (BAL P) to 12 o'clock, arrow pointing straight up

  b. SW1 to the 0 position

  c. SW2 both switches, 1 (C) and 2 (HI), to the DOWN position

- ❑ 4. Connect an AC voltmeter to the FROM TELCO test point (TP12) on the main board. TP12 is located for easy access through the front panel window of the controller.

- ❑ 5. While monitoring the FROM TELCO signal, adjust the BAL R pot (R18) on the end-to-end telco card for a null reading.

- ❑ 6. While monitoring the FROM TELCO signal, adjust the BAL P pot (R19) on the end-to-end telco card for a null reading.

- ❑ 7. While continuing to monitor TP12, rotate SW1 counter-clockwise from 0 to F. Note the level change at the FROM TELCO test point.

- ❑ 8. Adjust SW2 to the next setting, C DOWN and HI UP. Repeat the FROM TELCO level comparisons at the 0 and F positions of SW1.

- ❑ 9. Repeat the null adjustments (steps 4 through 8) approximately 3 more times to achieve the appropriate null readings at TP12. Typically, < 60 mVp-p (20 mVrms) is adequate.

The hybrid is now fully balanced.

> ☞ **Note:**
>
> **The TO TEL and FROM TEL potentiometers are not used with the end-to-end interface.**

From Telco Adjustments

The FROM TELCO pot adjusts the audio gain from the phone line into the controller when the 4-wire E&M (Part No. 702-0001) telephone interface is used. The only adjustment for the 2-wire end-to-end (Part No. 702-9999) telephone interface is the hybrid balance.

There are three methods provided for adjustment of the FROM TELCO signal. The preferred method is detailed in Section 5. The second method uses dial tone and the third method uses DTMF tones.

When using the controller in a direct autonet configuration, it is suggested to first adjust the TO TELCO pots on both Model 459s, and secondly use the DTMF procedure for adjusting the FROM TELCO pots.

> ☞ **Note:**
>
> **It is extremely important that the FROM TELCO pot is not turned up too high. Improper setting will result in excessive background noise and feedback.**

Dial Tone Method

When adjusting using dial tone, the dial tone signal is at a known level but the central office (CO) loss is unknown. Follow the steps below to adjust the FROM TELCO level using the dial tone method:

- ❑ 1. Key up a valid interconnect mobile and obtain a dial tone.
- ❑ 2. Monitor the FROM TELCO test point 12 (TP12) while dial tone is present.
- ❑ 3. Adjust the FROM TELCO pot (R197) to obtain 150 mVp-p (35 mVrms) at TP12.

DTMF Method

When adjusting using DTMF, the central office (CO) loss is at a known level but the DTMF level is unknown. Follow the steps below to adjust the FROM TELCO level using the DTMF method:

- ❑ 1. Establish an interconnect call to a valid mobile.
- ❑ 2. From the telephone side, depress and hold the DTMF 5 key.
- ❑ 3. Monitor the FROM TELCO test point 12 (TP12) while the tone is present.
- ❑ 4. Adjust the FROM TELCO pot (R197) to obtain 150 mVp-p (35 mVrms) at TP12.

To Telco Adjustment

The TO TELCO adjustment is designed to set the audio gain from the controller voice processing to your local telephone central office (CO). If an E&M telco card is connected to a microwave link, use the instructions given in Section 5 to adjust the TO TELCO pot to match the desired input level of the microwave.

PROGRAMMING USERS

To finish installing the system all of the user information needs to be programmed for individual customers. Use the TCBase Manual to assist with programming. A few of the key parameters are explained in this expanded section.

> **Note:**
>
> **The time and date are automatically cloned to all Zetron units at the site which are connected to the control bus. Additionally, the master controller resets all the slaves at midnight daily to ensure consistent clock synchronization between repeater controllers for billing purposes.**

Repeater Timing

There are several important settings in the Trunking Controller Database, TCBase, that define repeater timing. If either of these settings is incorrect, the system will experience problems such as difficulty accessing the system, audio squelch tail, and dropped calls.

Although most applications use the same timing parameters, the Model 452 and 459 were designed for complete configuration flexibility. Therefore, the following values are recommended for a majority of systems:

Keyup Delay (Repeater Config)	0.02 seconds
COR Hold Time (Site Config)	0.30 seconds

Keyup Delay

The Keyup Delay defines the length of time (in seconds) that the controller waits to send data packets to the mobile after keying the transmitter. Any repeater suitable for trunking must be able to attain full power in less than .1 second (100 milliseconds). This is required for the fast LTR handshaking that occurs each time a mobile user presses PTT. Due to processing delays, the controller adds about .01 to .02 sec (10 to 20 milliseconds) to the value programmed in TCBase.

The recommended total delay becomes about 35 milliseconds. Lengthen this time if the repeater is especially slow to reach full power. If this time is set too short or long, radios may have trouble accessing the system.

COR Hold Time

The COR (carrier squelch) Hold Time defines the length of time (in seconds) that the COR signal may drop or fade without a normal "turn off" packet, before the mobile loses the repeater channel. If the RF carrier fades and then returns before the COR Hold Time expires, then the mobile call continues normally.

It is recommended that this setting be left at the default value. If the hold time is too long, frequent audio squelch tails may result when the mobile signal is weak and the controller cannot hear the "turn off" packet.

If the controller seems to be missing many "turn off" packets, check the SQUELCH pot and JP19 setting.

Repeater Hold Time

The Repeater Hold Time determines the amount of time (in seconds) to hold the repeater keyed after transmitting a data packet. If the PTT relay is "chattering" when the home channel is free and one of the mobiles has been trunked off, this value should be increased.

The Repeater Hold time value in the Site Config database is important, but not critical to system operation. A value of 1 to 3 seconds can reduce thermal stresses on the RF power amp from excessive keying.

Repeater Timeout

The Repeater Timeout is the maximum amount of time (in seconds) that a dispatch mobile may continuously occupy the channel. Once this item elapses, the mobile is invalidated - turn-off codes are sent and no further audio is repeated. The mobile retains the repeater, however, until PTT is released.

The Repeater Timeout value in the Site Config database is important, but not critical to system operation.

COR Mute Time

This carrier squelch time determines how long after the controller loses the mobile carrier before it mutes audio. If the mobile fades and comes back within this time period (for example due to RF multi-path) the controller keeps the audio path active, without introducing picket-fencing. This setting applies only to dispatch operation.

This time is fixed at .1 sec (100 milliseconds).

Packet Loss Time

The packet loss time determines how long after the controller loses valid data packets from the mobile before it drops the call. RF fade, skip, or interference from other trunking system mobiles can cause loss of receive packets. (For example, other mobiles capture the LTR receiver.)

This time is fixed at 2 seconds.

FIELD UPDATES

From time to time, Zetron releases new software versions that provide enhanced functionality or additional features. Use the following information, in the event that a software update needs to be performed in the field.

Update packages from Zetron include detailed procedures for installation. Please use them first, since they may be more specific than those contained in this section. The instructions provided in this section are back-up procedures in the event that update instructions were not provided with your package. Please notify Zetron customer support personnel if you need assistance updating your system

Caution:

Every Model 452 or Model 459 at the site must be updated to the same software version (U25 and U26 on the main board). This ensures compatibility between controllers for reliable operation.

Identifying PROMs

The PROMs included in the update kit are labeled with important information that identifies the software. A typical label is shown in Figure 6-1.

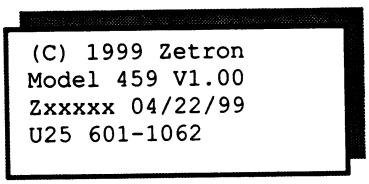

Figure 6-1. Sample PROM Label

The software version number is the "1.00" following the letter "V.

The "xxxxx" is the Zetron sales order number and should match the PROM that is being replaced. The last line identifies the proper socket location (U25 or U26) for the new chip.

Caution:

ICs are delicate and sensitive to static. When handling them, be sure to remain grounded by maintaining contact with the chassis sheet metal. Only remove the chips from the static protective shipping material when ready to begin installation.

Figure 6-2 illustrates the location of critical ICs on the Model 452/459 main circuit board.

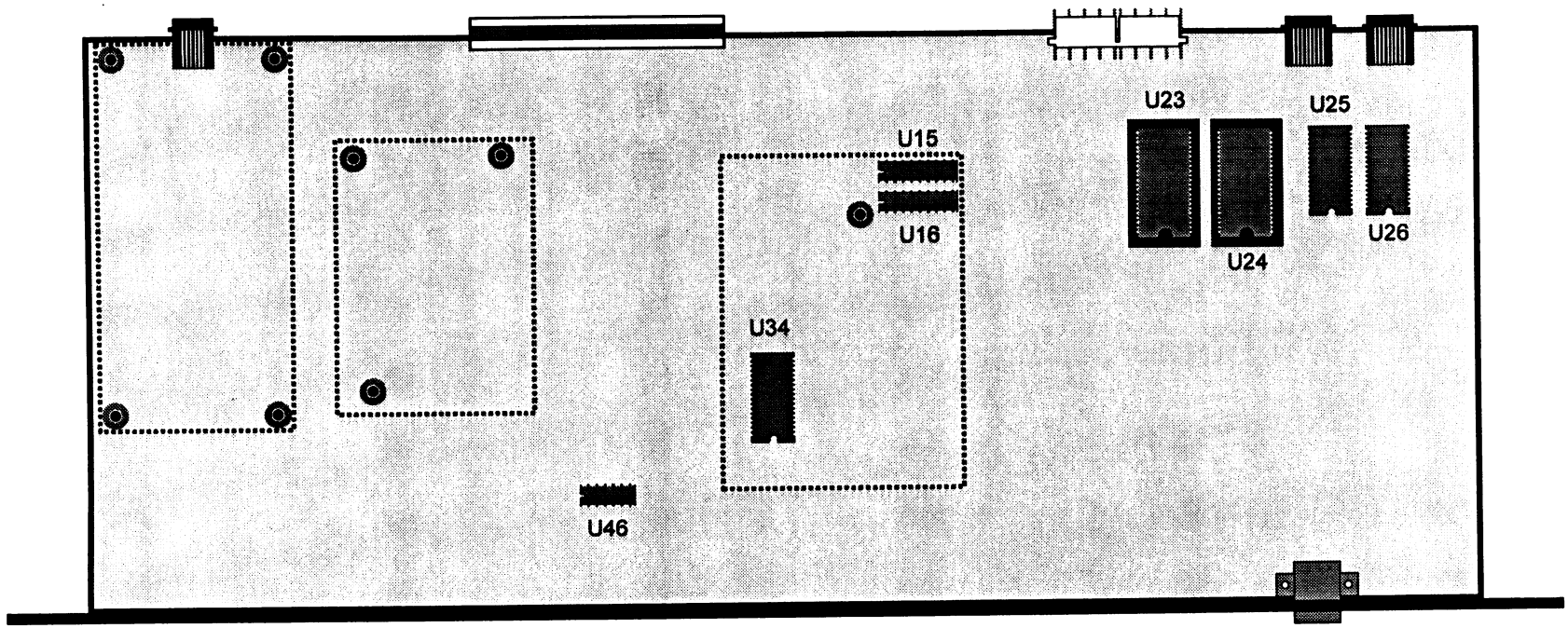

Chip	Description	Chip	Description
15	Tone generator	25	EPROM
16	LTR protocol	26	EPROM
23	RAM & battery socket	34	modem
24	RAM & battery socket & clock	46	DTMF decoder

Figure 6-2. Main Board Chip Locations

If the battery sockets have been inadvertently removed from the main board sockets XU23 and XU24 during an upgrade, they absolutely must be returned to their respective sockets. If the chips are accidentally reversed, the controller will lose clock function, and subsequent errors will occur.

The XU23 battery socket contains an 8-pin IC and the XU24 battery socket contains a 16-pin IC. Both sockets are visible only when the RAM chips (U23 and U24) are removed, causing a total loss of RAM data memory.

Updating TCBase

Follow the steps below to update the database on the office computer.

- ❑ 1. Use the Comm, Retrieve functions in TCBase to obtain current billing data (airtime accumulator and call detail buffer).
- ❑ 2. Update TCBase using the "install.exe" program included on the floppy diskette from Zetron. Follow the on-screen directions to complete the database installation. The installation automatically backs up existing database files.
- ❑ 3. Program the new version of TCBase with the changes that apply to the upgrade options. The exact database fields are determined by the specific options ordered.

> ☞ **Note:**
>
> **If the site is remotely located, have an assistant available to transfer the new database settings from the office computer. Alternately, load the new TCBase into a portable computer to take to the site. Remember to use the Zetron serial cable (not a standard RS-232 cable) for a local connection.**

Installing New Software

Follow the steps below to replace software PROMs in the controller.

- ❑ 1. Power down the controller(s) that is (are) being updated.
- ❑ 2. Disconnect the control bus and other cables from the back of these Model 452/459(s).
- ❑ 3. Remove the top cover of the units to expose the main circuit board. Be sure to put the screws in a safe location, so as not to misplace them.
- ❑ 4. Locate U25 on the main board (refer to Figure 6-2) and remove it using a prom puller or other suitable tool. Be careful not to damage the socket or neighboring components.

> **Note:**
>
> **Carefully note the orientation of the existing PROMs located in U25 and U26 on the main board as determined by the small notches at one end of the chips, and not by the Zetron label.**

- ❑ 5. Replace the chip with the new one provided in the upgrade kit, labeled "U25". The notched end should point toward the front of the controller.
- ❑ 6. Locate U26 on the main board (refer to Figure 6-2) and remove it. Be careful not to damage the socket or neighboring components.
- ❑ 7. Replace the chip with the new one provided in the upgrade kit, labeled "U26". The notched end should point toward the front of the controller.
- ❑ 8. Take a moment to examine the pins of each newly installed chip. Be sure that each pin is fully inserted into the proper socket, and not bent underneath or out.

7. INTERCONNECT SIGNALING 7-1

END-TO-END, LOOP START LINES 7-1
Idle Condition 7-1
Outgoing Call 7-1
Incoming Call 7-1
Call Disconnect 7-1
E&M TYPE I, FOUR-WIRE LINES 7-2
Idle Condition 7-3
Incoming DID Call 7-3
Outgoing Calls 7-4
DIRECT AUTONET 7-5

7. INTERCONNECT SIGNALING

END-TO-END, LOOP START LINES

Idle Condition

Looking toward the CO (central office) switch, the Ring lead is attached to the battery (-48 V_{DC}) and the Tip to ground. Both Tip and Ring are open, looking toward the Model 459.

Outgoing Call

An outgoing call is originated when the Model 459 seizes the trunk by applying a loop closure across the tip-ring (T-R) leads, causing current to flow in the loop between the Model 459 and the CO. The CO senses the current flow and attaches a digit receiver to the circuit in preparation for receiving address information. Once the equipment is attached, the CO provides dial tone to the Model 459. The Controller then passes dial tone through to the mobile caller. The caller's dialed information gets regenerated after dial tone is detected or after the "Start Supervision Seek Time" has elapsed if no dial tone is detected.

Incoming Call

An incoming call from the CO originates when the CO applies ringing voltage on the facility toward the Model 459, superimposed on the -48 V_{DC} battery voltage. The ringing signal is 105V, 20 Hz, alternating between 2 seconds on and 4 seconds off.

The Model 459 detects the ringing voltage and answers the call by closing the loop. Upon sensing loop current, the CO disconnects the ringing generator and completes the call by establishing an audio path to the Controller. At this time the unit plays the go ahead prompt to the CO or land line user and waits for the over dial digits.

Call Disconnect

Either the calling or called party may disconnect the call by going on hook. However, a land line disconnect signal is not required to be relayed to the Model 459 by the CO under the loop signaling format. There is no change of state; Ring remains connected to battery, and Tip to ground. Special equipment must be available at the CO to send a disconnect signal. The COs that have this capability will give a battery reversal (i.e., place the battery on the Tip and ground on the Ring), which the Model 459 can detect and disconnect on.

The Model 459 will disconnect by going on hook or opening the loop toward the CO.

E&M TYPE I, FOUR-WIRE LINES

Type I service is unique in that these trunks can be used to do DID calls and outbound calls. It also has improved audio for several reasons. Two hybrids are eliminated, signal levels are more tightly specified, and acceptable line losses are smaller.

Only two conditions are represented by E&M signaling, on hook and off hook. By convention, switching equipment, such as a PBX and the Model 459, transmits on its M lead (mouth) and receives on its E lead (ear).

The conventions used to represent on hook and off hook states for E&M Type I are summarized in Table 7-1.

Table 7-1. E&M State Conditions

STATE	From M459 to CO	From CO to M459
on hook	ground	open
off hook	-48 V_{DC}	ground

For the proper signaling to take place an Inverted M Lead Protocol is used so that the M (mouth) lead signals the E (ear) lead, as shown in Figure 7-1.

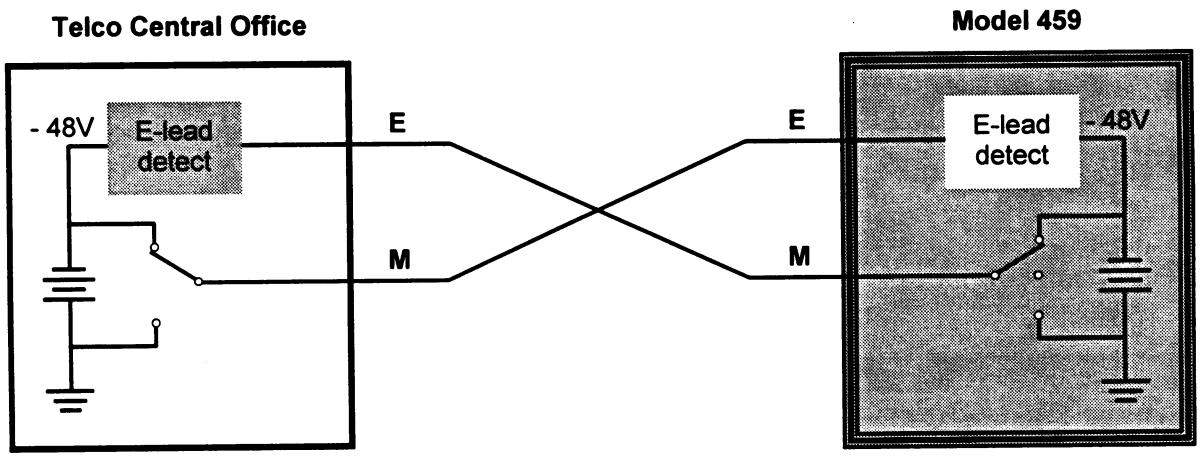

Figure 7-1. Inverted M Lead Circuit

Figure 7-2 shows the complete picture. The TIP 1 and RING 1 leads carry audio from the telco central office (CO) to the Model 459, while the TIP 2 and RING 2 leads carry audio from the Model 459 to the CO.

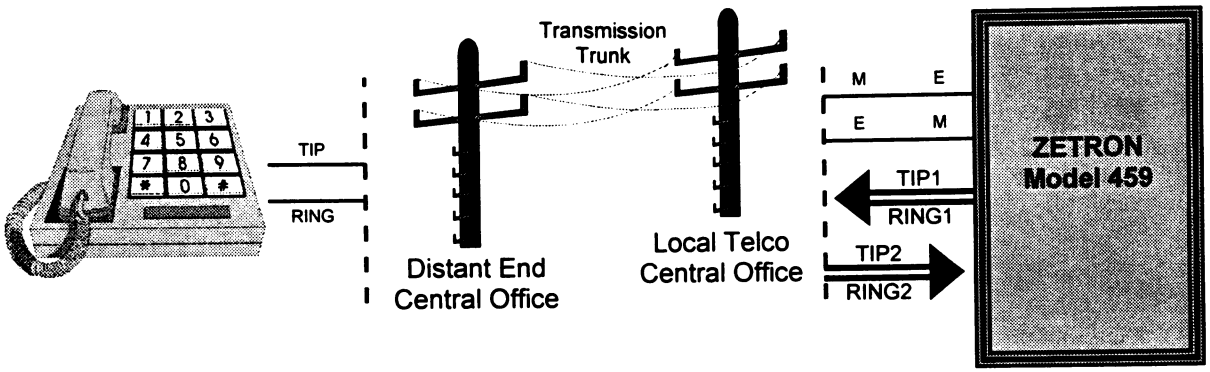

Figure 7-2. Type I 4-Wire with E&M Signaling

Idle Condition

Figure 7-3 illustrates the idle condition (on hook) for Type I E&M signaling between a Model 459 and telco interface equipment. To signal off hook to the telco equipment, the Model 459 switches its M lead from ground to -48 VDC. To signal to the Model 459 that the distant end has gone off hook, the telco equipment grounds the E lead.

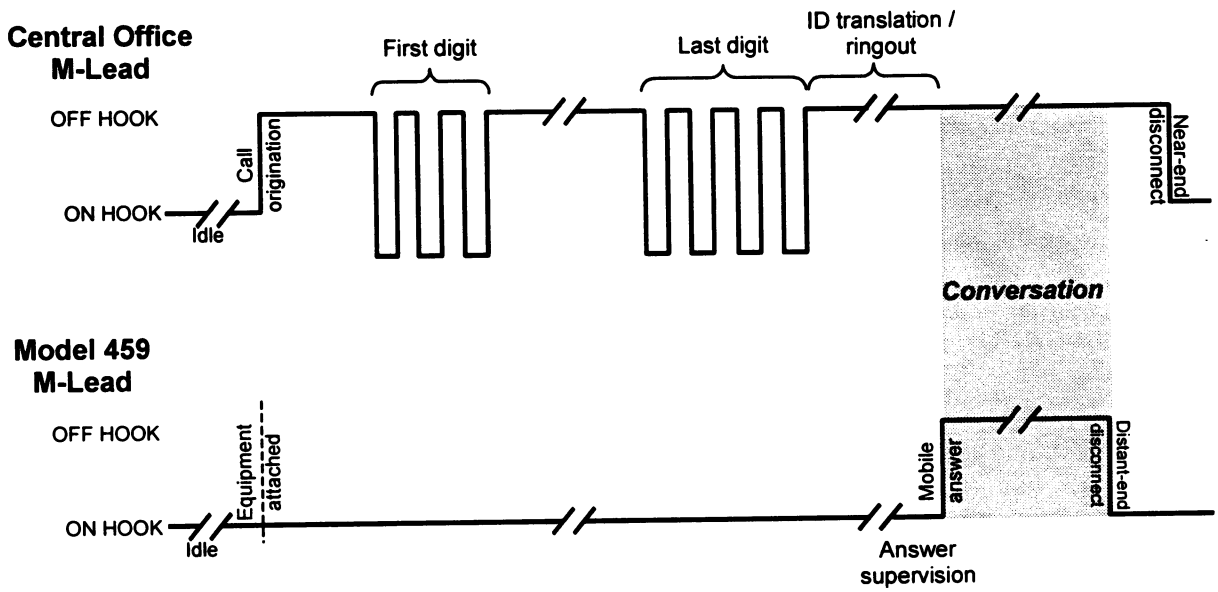

Figure 7-3. Immediate Start Call Sequence

Incoming DID Call

Either Immediate or Wink Start signaling can be used. With E&M four-wire, everything is identical to two-wire except the E and M leads do the signaling of the off hook and on hook conditions. This is illustrated in Figure 7-3 and Figure 7-4.

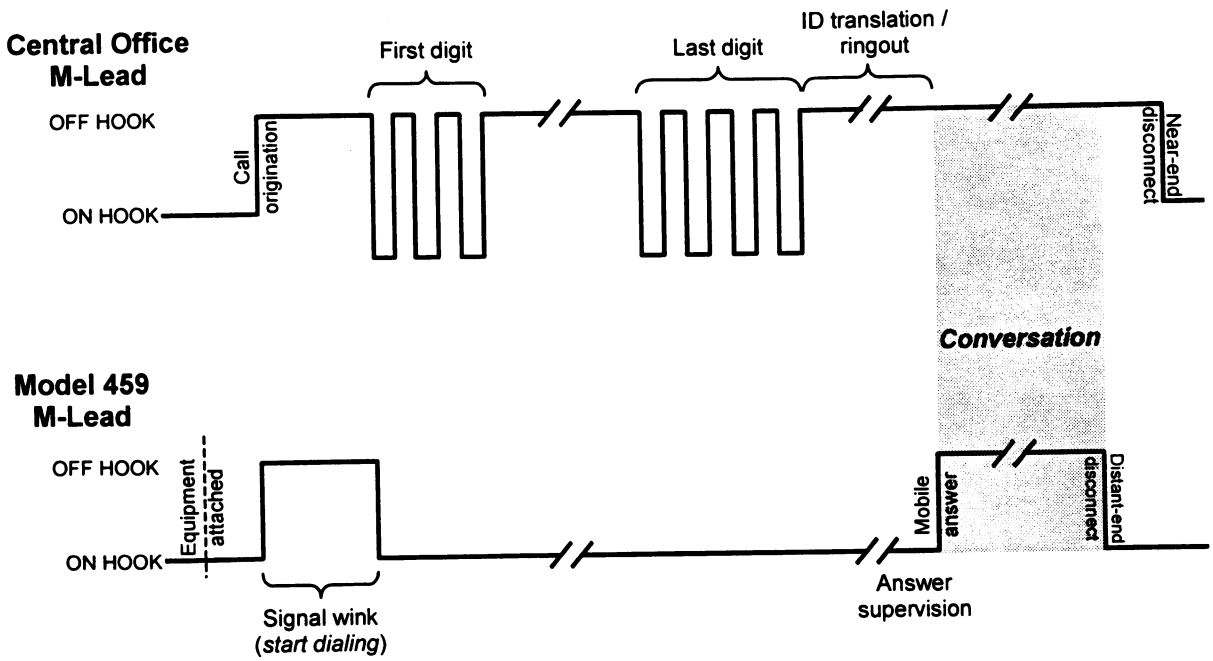

Figure 7-4. Wink Start Call Sequence

Outgoing Calls

An outgoing call originates when the Model 459 seizes the trunk by going off hook with its M-lead. The CO sees this and attaches a digit receiver to the circuit in preparation for receiving address information. Once the equipment is attached, the CO provides dial tone to the Model 459. The Model 459 then passes dial tone through to the mobile caller. The caller's dialed information gets regenerated after dial tone is detected or after the "Start Supervision Seek Time" has elapsed if no dial tone is detected.

Once the CO is done routing the call, it sends ring back to the Model 459. And when the land line phone is answered and goes off hook, an off hook condition is sent back to the Model 459. At this point the CO connects the audio through in both directions and the call has been established. Either the Model 459 or the caller can disconnect the call by going on hook. When the caller goes on hook, the CO signals the Model 459 on its E-lead by going on hook as well. Figure 7-5 illustrates this entire process.

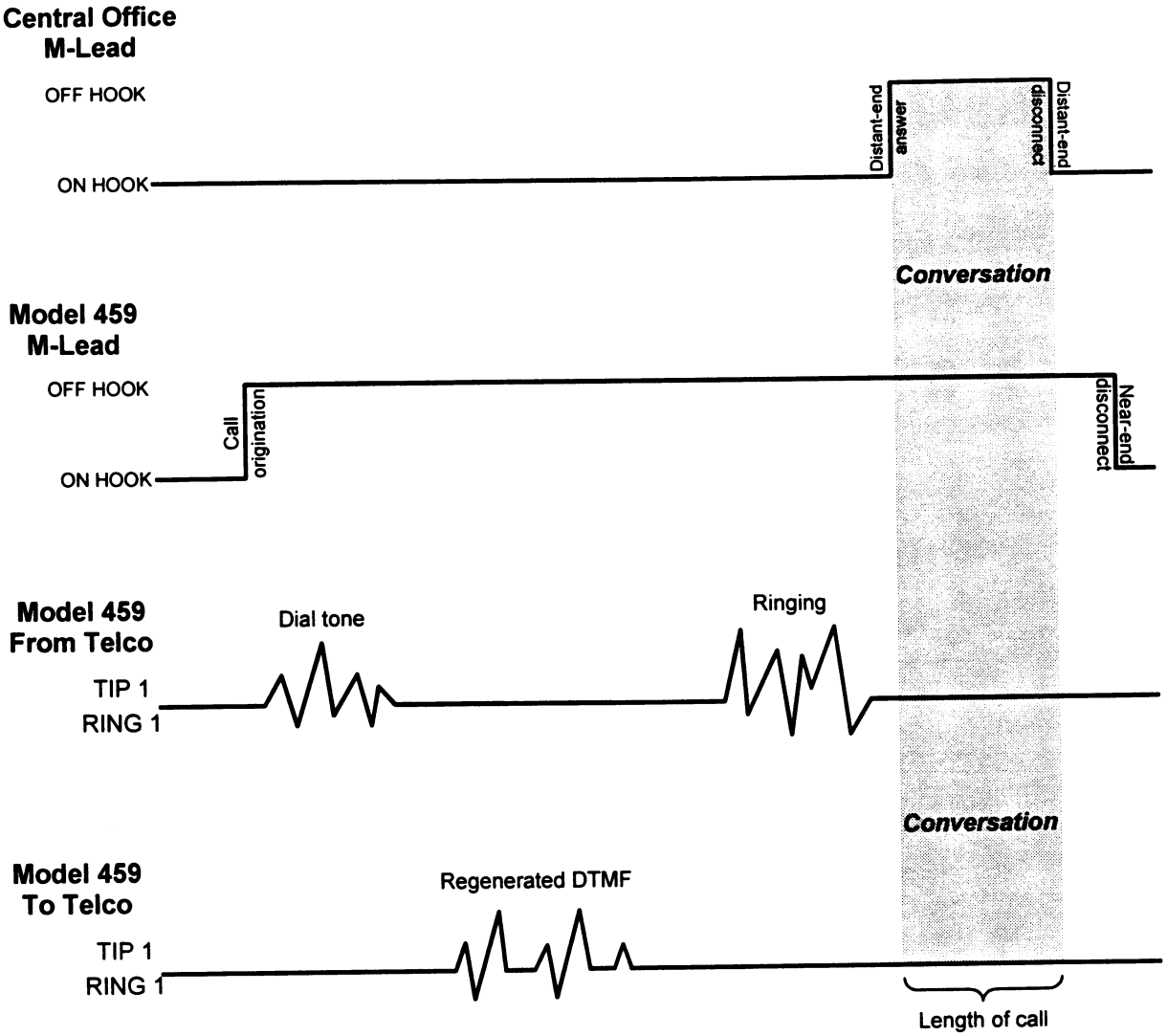

Figure 7-5. Outgoing Call Sequence

DIRECT AUTONET

A direct Autonet setup has two Model 459s directly connected via RF link, microwave link, or leased line. These two Model 459s are located at different sites and can only process dispatch or direct Autonet or PTC calls. Each controller must have an E&M telco card installed for Autonet calling.

Figure 7-6 shows the suggested wiring for a direct Autonet call. Jumpers JP6 and JP7 set the audio gain on the E&M telco card. The positions for JP6 and JP7 listed in Figure 7-6 are correct for 0 dBm in and 0 dBm out audio levels on an RF or microwave link.

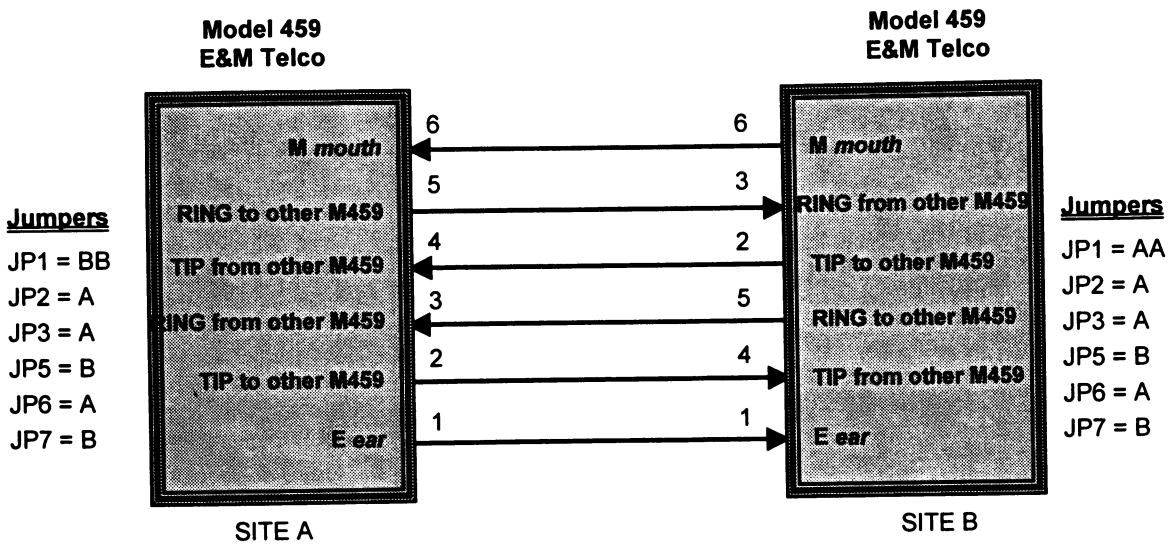

Figure 7-6. Direct Autonet Configuration

Table 7-2 shows the off hook and on hook conditions of the two Model 459s.

Table 7-2. Autonet State Conditions

State	Site A Model 459	Site B Model 459
on hook	Open on E	Open on M
off hook	-48 V_{DC} on E	-48 V_{DC} on M

A call is initiated when the user keys up with an autonet or push-to-connect interconnect ID that is programmed for direct link. The calling Model 459 goes off hook. A short time later, the calling Model 459 sends the DTMF overdial. After the called Model 459 receives the DTMF overdial, it responds with a DTMF B9 to confirm that direct connect autonet is occurring.

After the B9, the off hook signal from each site becomes an indication that a mobile is keyed at the site. Conversely, the on hook condition does not end the call, instead it indicates no mobile is currently keyed at the site. The call is terminated by a long DTMF # or when the turn around timer expires (no mobile keyed at *either* site for the number of seconds set for the turn around timer).

Figure 7-7 shows direct autonet calls.

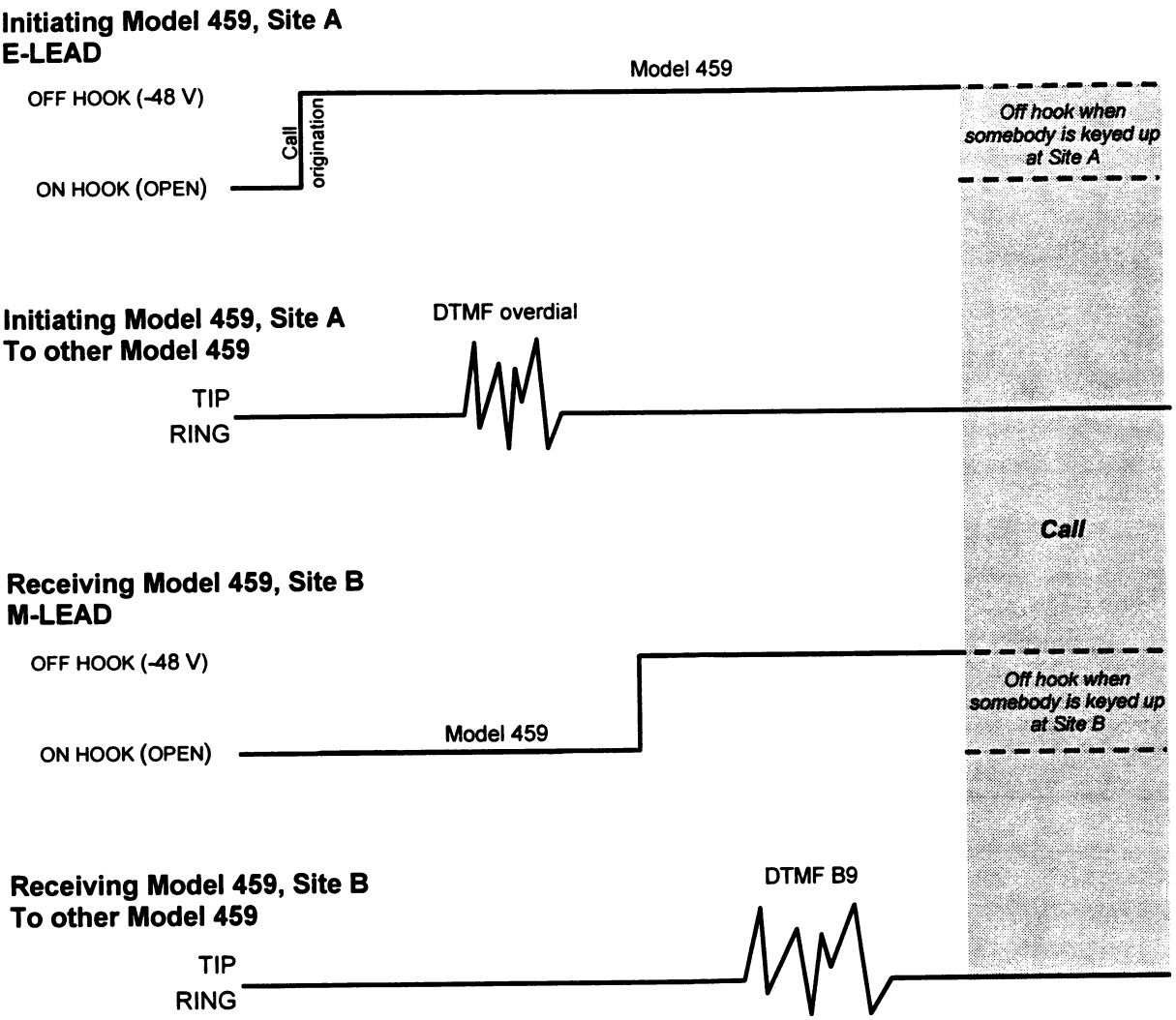

Figure 7-7. Autonet Call Sequence

8. CONFIGURATION WORKSHEETS 8-1

GENERAL SITE CONFIGURATION 8-1
POTENTIOMETER SETTINGS 8-2
End-to-End Card 8-2
DIP SWITCH SETTINGS 8-3
End-to-End Card 8-3
JUMPER SETTINGS 8-4
E&M Card 8-4

MII

8. CONFIGURATION WORKSHEETS

GENERAL SITE CONFIGURATION

Record the following details about the site by filling in the blanks or circling the appropriate item:

Site Location _____

LTR System Area 0 1

Bus Master Channel _____ Morse ID Channel _____

Site Phone Number _____

Installation Date _____

Technician _____

Repeater Number	Model 452/459	RS-232 Baud Rate	Telco Type E-E/E&M	Options VP/DC*	Shared Channel?	RF Freq./ FCC CH#
1						
2						
3						
4						
5						
6						
7						
8						
9						
10						
11						
12						
13						
14						
15						
16						
17						
18						
19						
20						

* Model 459 only: VP = Voice Prompt Option installed. DC = Dial Click Option installed.

POTENTIOMETER SETTINGS

Record the pot settings for the main board in the shaded column:

Pot Label	Board Location	Setting	Description
FROM TELCO	R197	o'clock	audio input from telephone line
TO TELCO	R198	o'clock	audio output to telephone line
RX AUD	R199	o'clock	discriminator input from the repeater
SQUELCH	R200	o'clock	squelch adjustment
RX DATA	R201	o'clock	data input from repeater
TX AUD	R202	o'clock	audio output to repeater
TX DATA	R203	o'clock	data output to repeater

End-to-End Card

Record the pot settings for the end-to-end telco card in the shaded column, if applicable:

Pot Label	Board Location	Setting	Description
BAL R	R18	o'clock	resistance of hybrid balance
BAL P	R19	o'clock	composite phasing of hybrid balance
BAL C	SW1	o'clock	capacitance of hybrid balance

DIP SWITCH SETTINGS

Circle the settings in the shaded column for the main board switches:

Switch	Setting	Description
A1	UP DOWN	test mode for alignment Place up for Test mode
A2	UP DOWN	not used
A3	UP DOWN	RS-232 baud rate
A4	UP DOWN	9600
B1	UP DOWN	Control Bus Master master – up slave – down
B2	UP DOWN	not used
B3	UP DOWN	LTR area selection Area 1
B4	UP DOWN	repeater channel number
B5	UP DOWN	Depends on repeater number
B6	UP DOWN	SET-UP AT BENCH
B7	UP DOWN	
B8	UP DOWN	

End-to-End Card

Circle the settings in the shaded column for the end-to-end telco card switches:

Switch	Setting	Description
SW2-1	UP DOWN	capacitance range
SW2-2	UP DOWN	additional capacitance

JUMPER SETTINGS

Circle the settings in the shaded column for the main board jumpers:

Jumper	Setting	Description
JP5	A B	telco input type 459 only
JP6	A B	telco output type 459 only
JP7	A B	radio transmit audio output
JP8	A B	radio receive filter
JP9	A B	radio receive amplifier gain
JP10	A B	transmit data output coupling
JP11	A B	transmit data output level
JP12	A B	transmit data output signal format
JP13	A B	radio transmit amplifier gain
JP14	A B	transmit data polarity
JP15	X B	receive data polarity
JP19	1&2, 3&4 5&7, 6&8 5&6, 7&8	COR input select

E&M Card

Circle the settings in the shaded column for the E&M telco card jumpers:

Jumper	Setting	Description
JP1	A B	supervision leads
JP2	A B C	incoming off-hook condition
JP3	A B	relay contact closure
JP5	A B	outgoing off-hook condition
JP6	A B	from telco audio level
JP7	A B	to telco audio level

JP 19

8 7
6 5
4–3
2–1

REV	DESCRIPTION	DRN	CHK	APD	DATE
A	RELEASE	JW	KM	JW	5-7-99
B	ECN 5794	KM	KM	JV	8-12-99

Zetron
Model 459
E+M 4-wire
interface

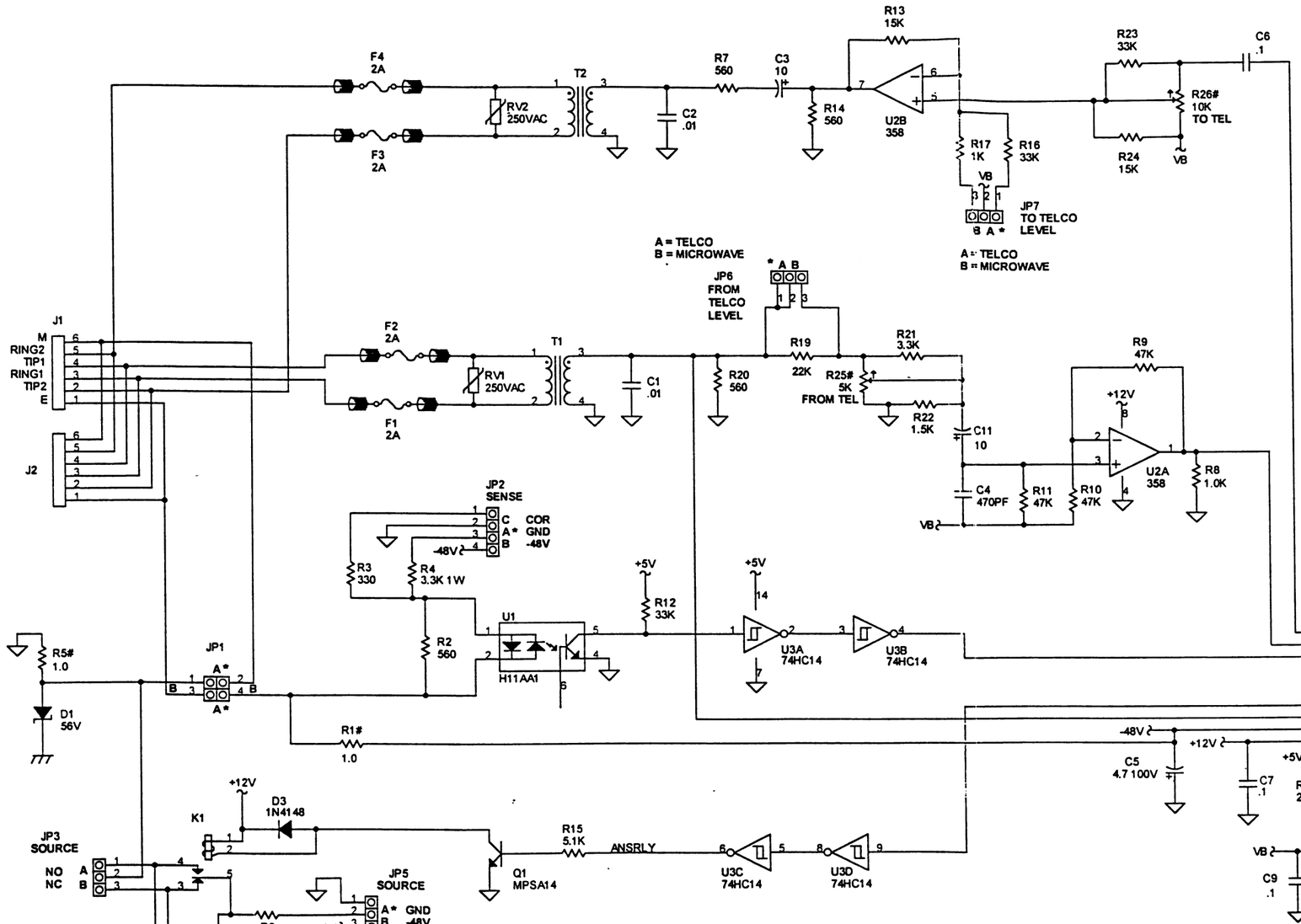

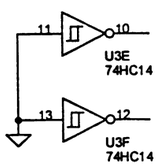

NOTES: UNLESS OTHERWISE SPECIFIED:

1. ALL RESISTOR VALUES ARE IN OHMS. 1/4 WATT. 5%.
2. ALL CAPACITOR VALUES ARE IN MICROFARADS.
3. ALL POTENTIOMETERS ARE 1 TURN.

UNUSED PARTS:

LEGEND:

ANALOG GROUND	
DIGITAL GROUND	
CHASSIS GROUND	
+	OPTION, INSTALL PER CUSTOMER ORDER
#	NOT INSTALLED
^	INSTALL ON HIGHER ASSEMBLY
=	SUBSTITUTE PART
•	JUMPER POSITION DEFAULT
___ X ___	CUT TRACE (REWORK)
----------	JUMPER WIRE (REWORK)
X	CUTTABLE JUMPER
-----X-----	CUTTABLE TRACE

ZETRON®
ZETRON INCORPORATED
P.O. BOX 97004
REDMOND, WASHINGTON 98073-9704

Title: MODEL 459 E&M 4-WIRE INTERFACE		
Size: B	Document Number: 008-0001	Rev: B
Date: Thursday, August 12, 1999	Sheet 1 of 1	

REV	DESCRIPTION	DRN	CHK	APD	DATE
A	RELEASE	KM	KM	JW	05-11-99
B	ECN 5874	KM	KM	JW	9-7-99

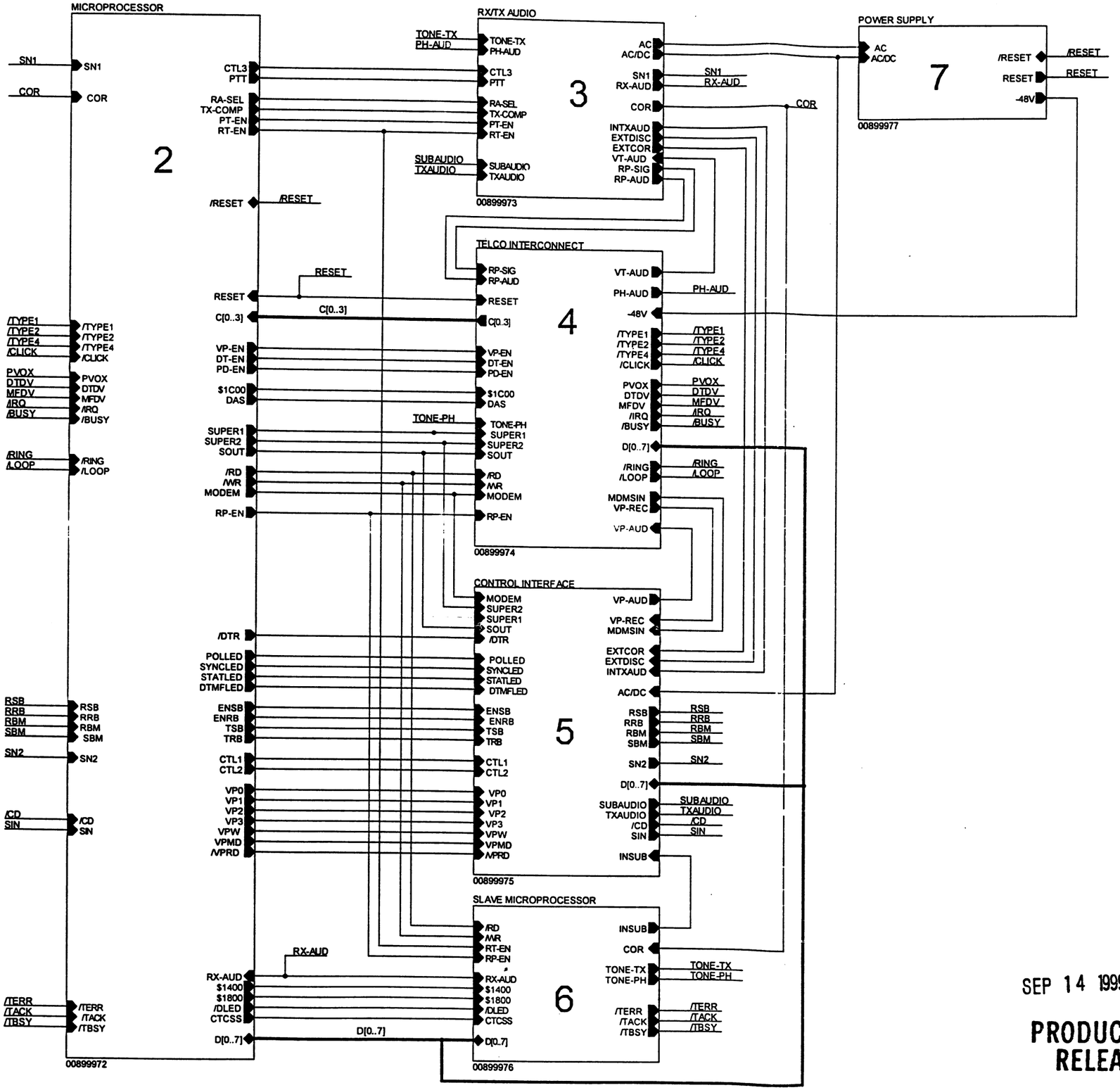

SEP 14 1999

PRODUCTION RELEASE

NOTES: UNLESS OTHERWISE SPECIFIED:

1. ALL RESISTOR VALUES ARE IN OHMS. 1/4 WATT. 5%.
2. ALL CAPACITOR VALUES ARE IN MICROFARADS.
3. ALL POTENTIOMETERS ARE 1 TURN.

UNUSED PARTS:

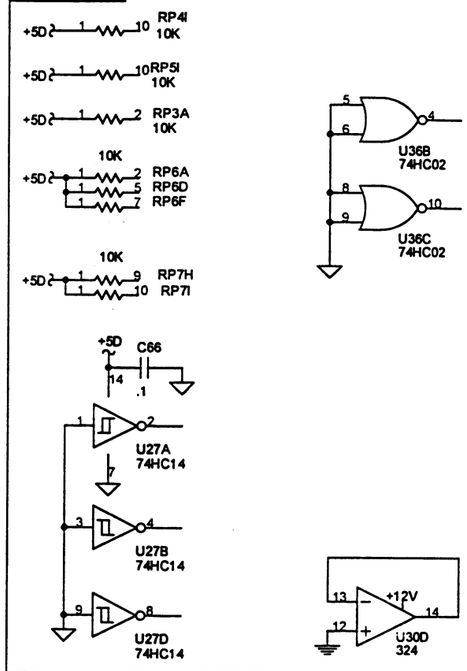

LEGEND:

ANALOG GROUND	
DIGITAL GROUND	
CHASSIS GROUND	
+	OPTION, INSTALL PER CUSTOMER ORDER
#	NOT INSTALLED
^	INSTALL ON HIGHER ASSEMBLY
=	SUBSTITUTE PART
•	JUMPER POSITION DEFAULT
___ X ___	CUT TRACE (REWORK)
----------	JUMPER WIRE (REWORK)
X	CUTTABLE JUMPER
-----X-----	CUTTABLE TRACE

ZETRON®
ZETRON INCORPORATED
P.O. BOX 97004
REDMOND, WASHINGTON 98073-9704

Title: M459 CONTROL BOARD

Size	Document Number	Rev
B	008-9997	B

Date: Wednesday, September 01, 1999 | Sheet 1 of 7

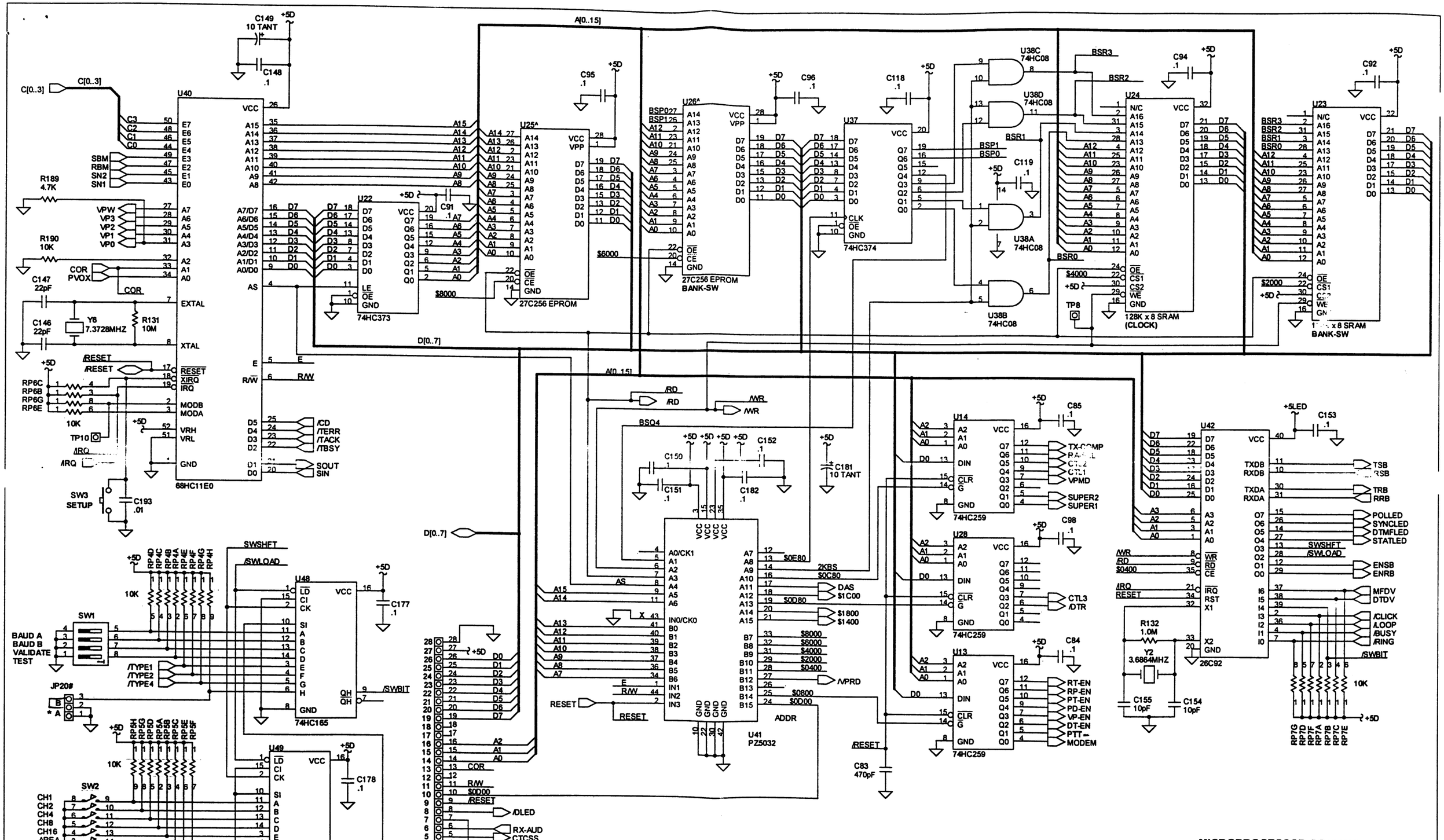

MICROPROCESSOR CONTROL

ZETRON INCORPORATED

Title: M459 CONTROL BOARD

Size	Document Number	Rev
B	008-9997	B

Date: Tuesday, September 07, 1999 | Sheet 2 of 7

DUAL-TIME SQUELCH

DISCRIMINATOR BUFFER

TRANSMIT COMBINING AMP

RECEIVER - TRANSMITTER AUDIO

Title	ZETRON INCORPORATED
	M459 CONTROL BOARD
Size B	Document Number 008-9997 Rev B
Date: Tuesday, September 07, 1999	Sheet 3 of 7

VP-EN
VOICE PROMPTS
VP-AUD
U31B 4053
VT-AUD
C111 .0047
R77 20K
R78 120K
RP-EN
REPEATER AUDIO
RP-SIG
U31C 4053
R76 120K
U10D 324
POWER LIMITER
R66 1.0K
R65 2.00K 1%
C53 2.2 50V
R64 2.00K 1%
C33 .1
R33 1.00K 1%
U6A LM358A
D28 1N4148
D27 1N4148
U6B LM358A
R30 15.0K 1%
R31 1.00K 1%
R32 4.7K
C32 10 TANT
U5B LM358A
D26 1N4148
R60 120K
C52 10 TANT
R62 2.00K 1%
C31 .1
R63 10K
R61 1.00K 1%
U5A LM358A
MODEM-AUD
C114 2.2 50V
MODEM
C110 .1
R124 1.0M
U31A 4053
PH TONE AUD
TONE-PH
R117 68K
R120 1.0K
TO TELCO AUD
R198 200K
JP6
B E&M
A * E-E
R109 100K
R118 27K
(+12 V)
R115 1.0K
U30B 324
R114 100K
R116 47K
R119 56K
U33C 4053
MODEM
C142 .1
U34
SOUT
D[0..7]
EXCLK
MDMSIN
$1C00
DAS
/RD
/WR
/IRQ
RESET
CS
ALE
RD
WR
INT
RESET
GND
73K212 OPTION
RXA
TXD
TXA
TXCLK
RXD
RXCLK
CLK
X2
X1
ISET
VREF
V+
C113 .1
C112 10 35V
C143 33pF
Y5 11.0592MHZ
C144 33pF
R125 2.0M
C141 .1
C129 .1
P1
+5A
+12V
-48V
SUPER1
SUPER2
/BUSY
/RING
/LOOP
/TYPE4
/TYPE2
/TYPE1
TP13
TO TEL
C48 2.2 50V
J5
DIAL -CLICK
/CLICK
+12V
+5D
R52 12K
FROM TEL VOICE AUD
R55 680
R197 100K
JP5
B E&M
A * E-E
R56 30K
R54 12K
C30 .1
C29 .001
U4A 324
TP12
TP11
R53 1.0K
C122 10 35V
R103 1.0K
C123 .1
R105 39K
R104 5.6K
Q12 J201
C120 2.2 TANT
R106 680K
R102 47K
C102 10 35V
C103 .1
U29A LM358A
R101 750
Q13 2N3906
C121 .1
PH-AUD
ANTI DIAL-TONE DETECTOR
C101 10 35V
R94 1.0K
R93 47K
C105 .1
R97 51K
R96 33K
U29B LM358A
R92 750
R91 1.0K
Q11 J201
C104 2.2 TANT
Q10 2N3906
C100 .1
R95 680K
C99 .0047
C22 .0047
C23 .0047
U4C 324
R26 100K
R27 6.8K
R23 49.9K 1/8W .1%
R24 1.50K 1%
R25 15K
U4D 324
D25 1N4148
R22 47K
C20 .1
R21 47K
PVOX
PHONE VOX
VP-REC
R99 3.3K
R100 1.0K
R98 470
RP-AUD
R59 2.7K
C50 .1
R57 2.7K
C49 .022 50V
U4B 324
R58 1.0K
DT-EN
PD-EN
U32C 4053
C126 .1
MF/DTMF DECODERS
AUDIO FROM TELCO
U47#
VIN
EN
CSTR
HEX
QUAL
LKP
AGND
DGND
VCC
D5
D4
D3
D2
D1
D0
DV
DE
XOUT
X1
X2
78A207 OPTION
C176 .1
C[0..3]
C3
C2
C1
C0
MFDV
C165# 33pF
Y4# 3.58MHZ
C166# 33pF
R185 22
C175 .1
C174 1 TANT
U46
XEN
ATB
EN
AIN
GND
VCC
D8
D4
D2
D1
DV
XO
X1
75T204 DTMF DECODER
DTDV
Y3 3.58MHZ
R186 1.0M
C164# 33pF
C163# 33pF

TELCO INTERCONNECT

ZETRON INCORPORATED		
Title: M459 CONTROL BOARD		
Size: B	Document Number: 008-9997	Rev: B
Date: Tuesday, September 07, 1999	Sheet 4 of 7	

SUB-AUDIBLE LTR TX DATA

TX DATA FILTER

RX LTR DATA FILTER

SUB-AUDIBLE CENTERING CIRCUIT

TONE GENERATORS

ZETRON INCORPORATED	
Title	M459 CONTROL BOARD
Size: B	Document Number: 008-9997
Rev: B	
Date: Tuesday, September 07, 1999	Sheet 6 of 7

AC/DC INPUT

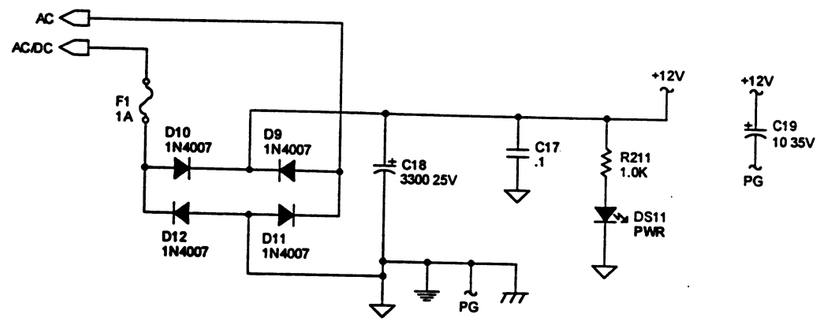

+12V TO -48V INVERTER

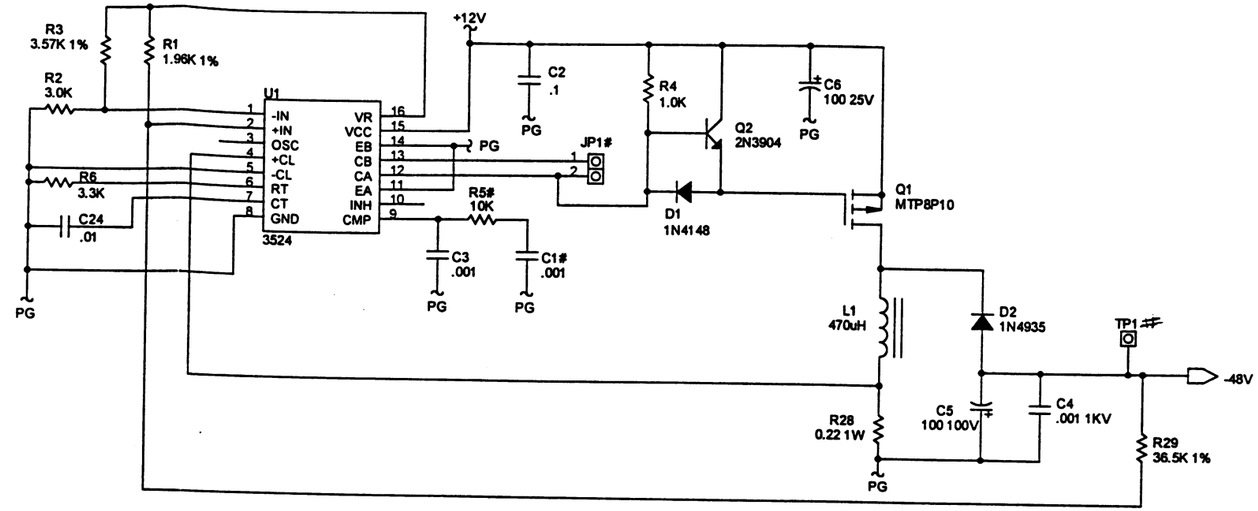

+12V TO +5V

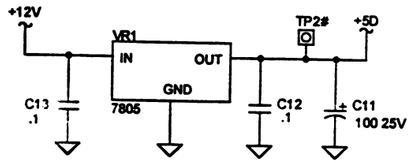

LED AND INTERFACE IC POWER

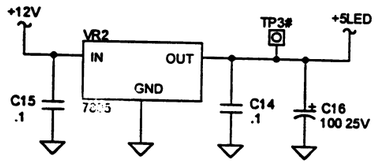

POWER-UP RESET

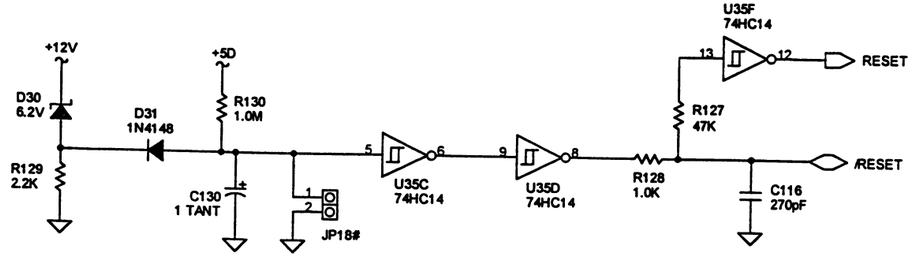

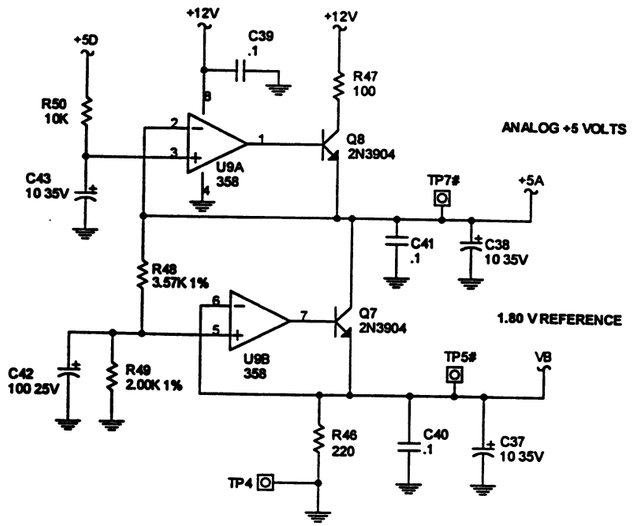

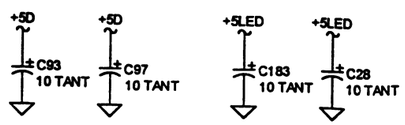

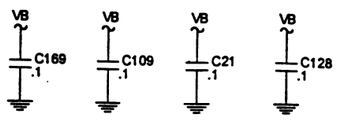

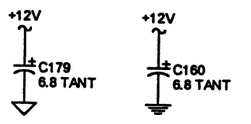

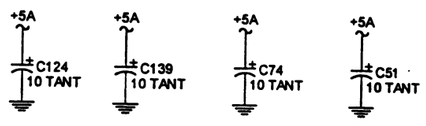

POWER SUPPLY

ZETRON INCORPORATED		
Title: M459 CONTR0L BOARD		
Size: B	Document Number: 008-9997	Rev: B
Date: Tuesday, September 07, 1999	Sheet 7 of 7	

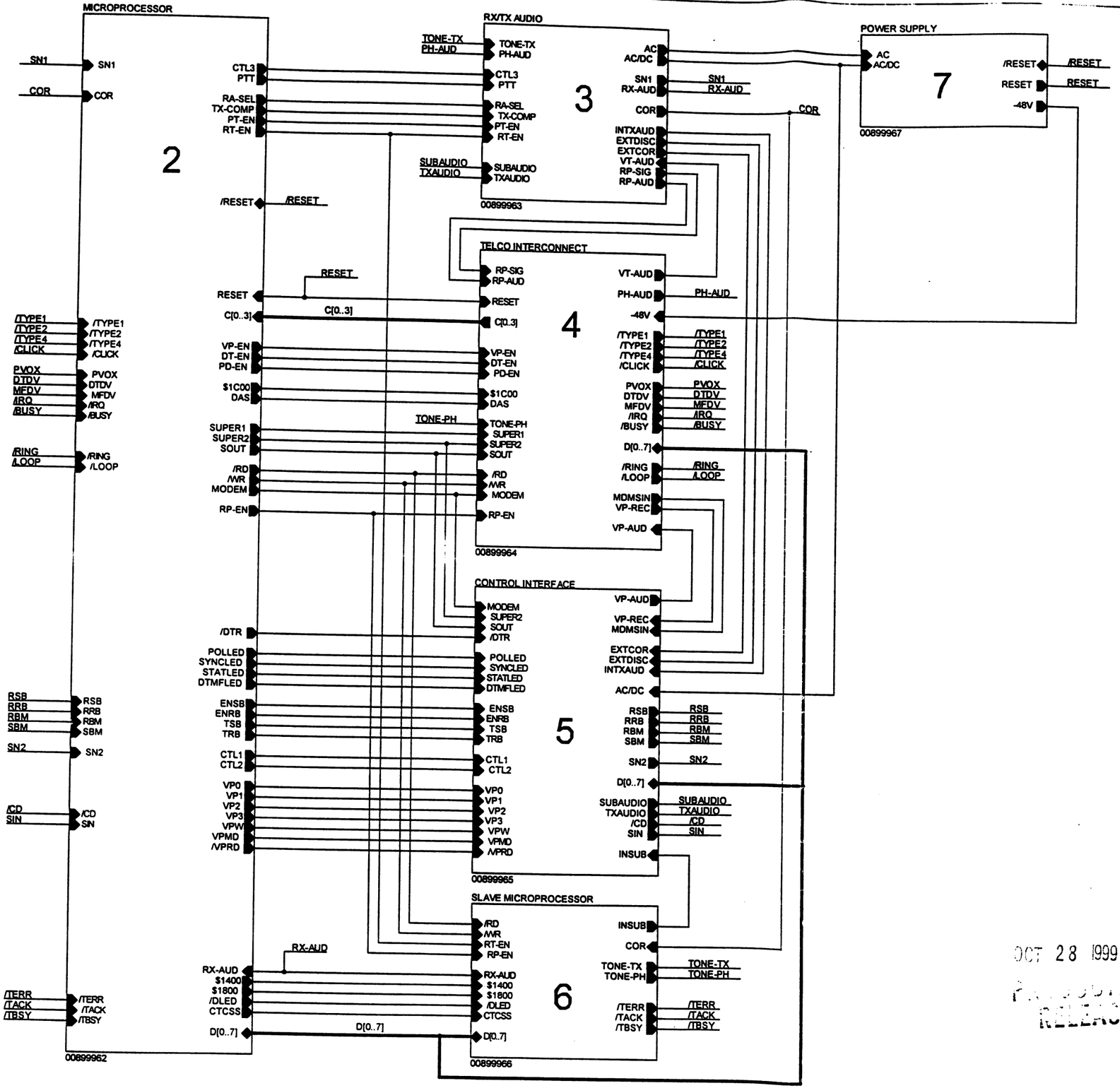

REV	DESCRIPTION	DRN	CHK	APD	DATE
1A	PILOT RELEASE	KM	MM	JW	06-08-99
2A	ECN 5875	KM	KM	JW	09-07-99
A	ECN 5939	MM	MM	JW	10-27-99

NOTES: UNLESS OTHERWISE SPECIFIED:

1. ALL RESISTOR VALUES ARE IN OHMS. 1/4 WATT. 5%.
2. ALL CAPACITOR VALUES ARE IN MICROFARADS.
3. ALL POTENTIOMETERS ARE 1 TURN.

UNUSED PARTS:

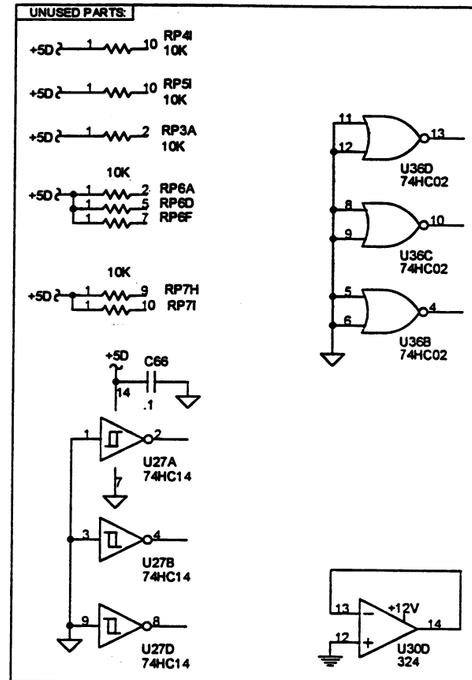

LEGEND:

ANALOG GROUND | DIGITAL GROUND | CHASSIS GROUND

+	OPTION, INSTALL PER CUSTOMER ORDER
#	NOT INSTALLED
^	INSTALL ON HIGHER ASSEMBLY
=	SUBSTITUTE PART
-	JUMPER POSITION DEFAULT
___ X ___	CUT TRACE (REWORK)
----------	JUMPER WIRE (REWORK)
X	CUTTABLE JUMPER
------X------	CUTTABLE TRACE

ZETRON INCORPORATED
P.O. BOX 97004
REDMOND, WASHINGTON 98073-9704

OCT 28 1999

RELEASE

Title: M452 CONTROL BOARD

Size: B | Document Number: 008-9996 | Rev: A

Date: Tuesday, October 26, 1999 | Sheet 1 of 7

MICROPROCESSOR CONTROL

ZETRON INCORPORATED		
Title: M452 CONTROL BOARD		
Size: B	Document Number: 008-9996	Rev: A
Date: Tuesday, October 26, 1999	Sheet 2 of 7	

DUAL-TIME SQUELCH

DISCRIMINATOR BUFFER

TRANSMIT COMBINING AMP

RECEIVER - TRANSMITTER AUDIO

	ZETRON INCORPORATED
Title	M452 CONTROL BOARD
Size: B	Document Number: 008-9996
Rev: A	
Date: Tuesday, October 26, 1999	Sheet 3 of 7

POWER LIMITER

MODEM

MF/DTMF DECODERS

ANTI DIAL-TONE DETECTOR

PHONE VOX

PHONE LIMITER AMP

TELCO INTERCONNECT

ZETRON INCORPORATED	
Title	M452 CONTROL BOARD
Size: B	Document Number: 008-9996
Rev: A	
Date: Tuesday, October 26, 1999	Sheet 4 of 7

SUB-AUDIBLE LTR TX DATA

TX DATA FILTER

RX LTR DATA FILTER

SUB-AUDIBLE CENTERING CIRCUIT

TONE GENERATORS

ZETRON INCORPORATED		
Title: M452 CONTROL BOARD		
Size: B	Document Number: 008-9996	Rev: A
Date: Tuesday, October 26, 1999	Sheet 6 of 7	

AC/DC INPUT

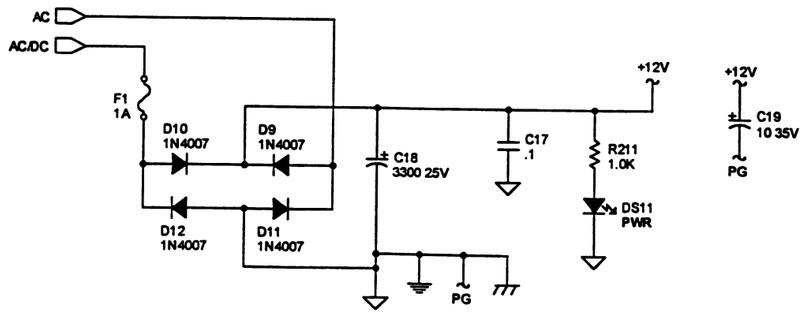

+12V TO -48V INVERTER

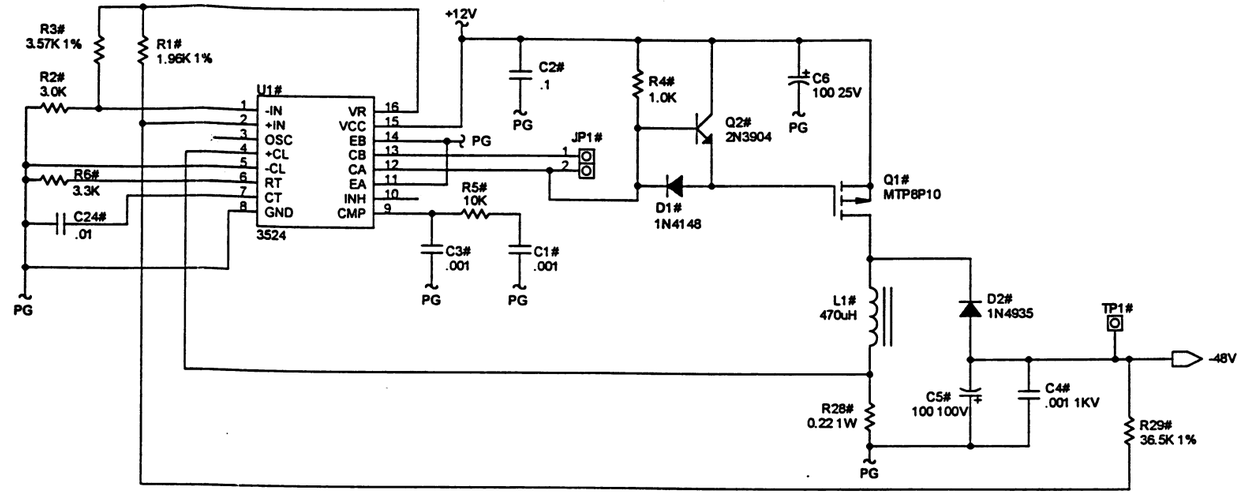

+12V TO +5V

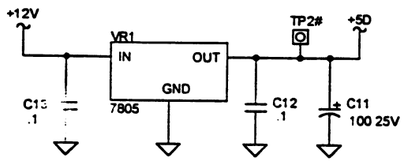

LED AND INTERFACE IC POWER

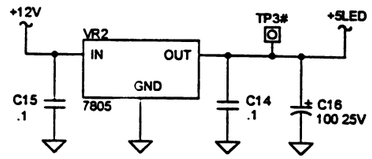

POWER-UP RESET

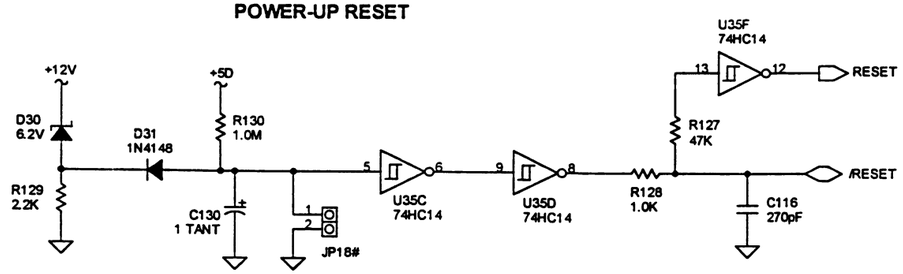

ANALOG +5 VOLTS

1.80 V REFERENCE

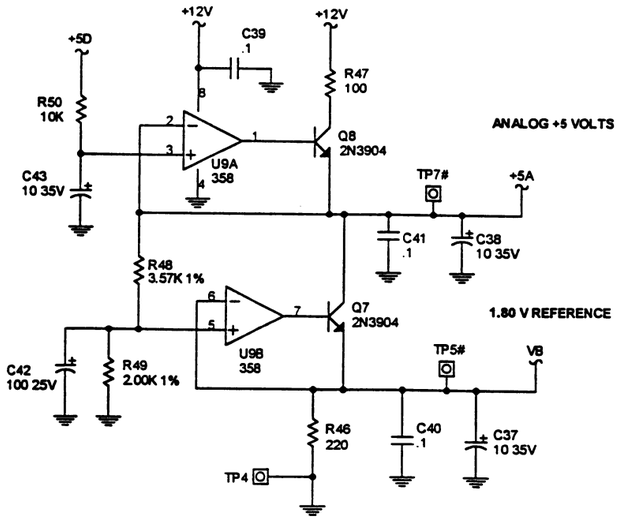

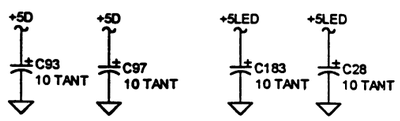

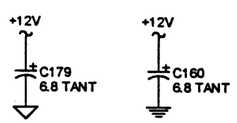

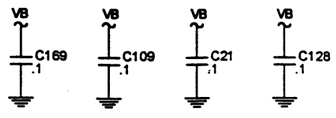

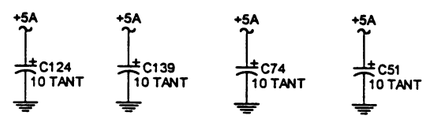

POWER SUPPLY

ZETRON INCORPORATED		
Title: M452 CONTROL BOARD		
Size: B	Document Number: 008-9996	Rev: A
Date: Tuesday, October 26, 1999	Sheet 7 of 7	